Table of Contents – Technical Product Catalogue 6.0

Product	Type	Page
SPIRAL®SYSTEM ROUND VENTILATION DUCTS AND FITTINGS		
	Ducts	SPR 25
		SPRP 32
		SRGL 33
		SRGW 34
	Spiral ducts in box units	SPR-C-MR 27
		SPR-C-WB 29
		WOOD-BOX 30
		MOBIL-RACK. 31
	Bends	BPL-90 35
		BP-90. 36
		BPL-K-90 37
		BP-K-90 38
		BPDL-90. 39
		BPD-90 40
		BPKL-90, BPKFL-90 41
		BPK-90, BPKF-90. 42
		BSL-90 43
		BS-90. 44
		BSKL-90. 45
		BSK-90. 46
		BSDL-90, BSD-90 47
		BPL-60, BP-60 49
		BSL-60, BS-60 50
		BSK-60. 51
		BSK-60. 52
		BPL-45 54
		BP-45. 55
		BPL-K-45 56
		BP-K-45 57
		BPDL-45 58
		BPD-45 59
		BPKL-45, BPKFL-45 60
		BPK-45, BPKF-45. 61
		BSL-45 62
		BS-45. 63
		BSKL-45. 64
		BSK-45. 65
		BPL-30, BP-30 67
		BSL, BS-30. 68
		BSKL-30. 69
		BSK-30. 70
		BPL-15, BP-15. 72
		BSL-15, BS-15. 73
		BSKL-15 74
		BSK-15 75
	Reducers	RPCL 77
		RPC 79
		RPCFL 81
		RPCF 83
		RSCLL, RSLL, RSCLFL, RSLFL. 88
		RSFC, RSFCF, RSFCL, RSFCFL 95

Product	Type	Page
	Saddle branches	SPL. 97
		SP. 99
		SPSL. 101
		SPS 103
		SSCL, SSL, SSC, SS 106
		SSCCB 112
		SSCCBL 114
		SSCFB 116
		SSCFBL. 117
	45 degree saddle branches	SSCVL-45, SSCV-45 118
	T-pieces and X-pieces	TPCL, XPCL 119
		TPC, XPC 122
		TPCL-CP-R, TPC-CP-R 128
		TSCL, TSL, XSCL, XSL, TSC, TS, XSC, XS . 129
		COLL 135
		TSVL-45, TSV-45, XSVL-45, XSV-45. . . 136
	Y-pieces	YSVL-45. 140
		YSV-45 141
	Couplings	NSL 142
		NS 143
		SNSL 144
		MSF 146
		SMSFL 147
	Branches	ILPRL 149
		ILPR 150
		ILPL 151
		ILP 152
		ILSL 153
		ILS 154
		ILSF 155
	Angle take-off	ILSV-45, ILSVL-45 156
	Angle take-off with mesh	ASV-45, ASVL-45 157
	Take-off with mesh	ILSN, ILSNL. 158

www.alnor.com.pl

ALNOR® ventilation systems
is a registered trademark protected by a technical patent. All modification rights reserved.

Contents

Product	Type	Page
	Flexible duct connectors	ILA . . . . . 159 ILA-FLS . . . . . 160 ILA-TK . . . . . 161 ILA-NSL 162
	End caps	CPSL . . . . . 163 CSL . . . . . 164 CPNF . . . . . 165 CPS . . . . . 166 CS . . . . . 167 CP . . . . . 168 CPF . . . . . 169 CSF 170
	Offsets	ODSOL, ODSO 171
	Collars with gaskets	GALA 172
	Gaskets	GASK 173
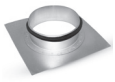	Square spigot plates	KILL . . . . . 174 KIL 175

Product	Type	Page
VENTILATION ACCESSORIES		
	Suspension rings	CLRL-C . . . . . 178 CLRU . . . . . 179 CLRL, CLR 180
	Perforated suspension tapes	PB 181
	Rectangular duct suspension brackets	EQRS . . . . . 182 EQVS . . . . . 183 EQZS . . . . . 184 EQLS . . . . . 185 EQVS-S . . . . . 186 EQZS-S . . . . . 187 EQLS-S . . . . . 188 AMORT 189
	Channels	LDB . . . . . 190 LDBST . . . . . 195 LDBDT 200
	Cantilever support arms	W-LDB . . . . . 202 WK-LDB 204
	Channel base fitting	ST-P 206
	Channel accessories	LDB-BE . . . . . 207 LDB-BE . . . . . 208 LDB-BTRA . . . . . 209 LDB-BAN . . . . . 210 LDB-P-41-1 . . . . . 211 LDB-P-41-2 . . . . . 212 LDB-PC-41-3 . . . . . 213 LDB-PT-41-4 . . . . . 214 LDB-PK-41-5 . . . . . 215 LDB-PTRA-45-41-4 . . . . . 216 LDB-BE-41 . . . . . 217 LDB-BTRA-41-3 . . . . . 218 LDB-PBTR-41-5 . . . . . 219 LDB-AN-TL-41-4 . . . . . 220 LDB-B-O-CLAMP . . . . . 221 LDB-U-BCLAMP . . . . . 222 LDB-B-CLAMP, LDB-W-CLAMP . . . . 223 LDB-BAN-41 . . . . . 224 LDB-Z . . . . . 225 LDB-U . . . . . 226 LDB-DCB-41-4 . . . . . 227 LDB-STP-AN-41-3 . . . . . 228 LDB-PFIX-41-4-TOP . . . . . 229 LDB-STP-82-4-2 . . . . . 230 LDB-CHTB-41-6-2 231

www.alnor.com.pl

ALNOR® ventilation systems

is a registered trademark protected by a technical patent. All modification rights reserved.

Contents

Product	Type	Page
		LDB-EXT-U-21-4 232
		LDB-WP-41 233
		LDB-BAN-R2-41 234
		Z-LDB 235
		GPK 236
	Channel nuts	SNP-0806-SR-NK 237
		SNP, SNL, SNKL 238
	Threaded rods	PG 240
	Beam clamps for threaded rods	B-CLB 241
	Drop-in anchors	TK 242
		TK-MO 243
	Steel screws	SRS/SRS-D 244
		SR2G 245
		KROZ 246
	Steel nuts	NKS 247
		NZO 248
	Steel washers	PDS 249
	Beam clamps	KLQ 250
	Slide channels	PWQ 251
		PWQ-R 252
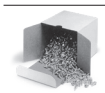	Self-drilling screws	WGO 253
		WGO-KL-NK, WGO-KZ-NK, WGO-IB-NK . . 254
	Rivets	NIT-S, NIT-S-K 255
	Band clips for flexible ducts	TKS 256
		TKS-A 255
		TKS-N 257
		TKSE, TKSL 259
		TKSE-A, TKSL-A 260
	Sealing clamps	MSFK 261
		MSFK-C 262

Product	Type	Page
ROOF INSTALLATION ACCESSORIES		
	Roof accessories	FAA, FAAL, FAAT 265
		PD-EPDM-R 267
		PD-EPDM-S 268
		PD-EPDM-S0 269
	Roof feet	ST-ROF-330, ST-ROF-AW-330 270
		ST-ROF-AWL 271
		ST-ROF-AWL-STR 272
		SNP-1008-SR-NK 274
		ST-ROF-MAT 275
	Roof support	ST-ROF-SET-H 276
		ST-ROF-SET-4 277
		ST-ROF-SET-6 278
		ST-ROF-SET-8 279

www.alnor.com.pl

ALNOR® ventilation systems
is a registered trademark protected by a technical patent. All modification rights reserved.

www.alnor.com.pl

Contents

Product	Type	Page
VENTILATION DUCT PREFABRICATED COMPONENTS		
	Corners for rectangular ducts	NQ . . . . . 282 NQ-SH 283
	Flange profile	PQ . . . . . 284 PQ-SIL 285
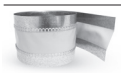	Flexible duct connector	AMT 287
	Turning vane guides for rectangular ducts	PRQ 289
	Duct reinforcement	WKK, WKK-OCY . . . . . 290 RURA, WKD . . . . . 291 WKT 292
	Flanges	FLS 293
	Self-drilling screws	WGO 294
	Wire mesh	SIA 295
	Damper mechanism	KIT-DSKS . . . . . 296 KIT-DSKS-0, KIT-DSKS-1 . . . . . 297 KIT-DS . . . . . 298 KIT-DS-H . . . . . 299 KIT-DS-M . . . . . 300 KIT-DS-SQ12 . . . . . 301 KIT-DS-JDS . . . . . 302 KIT-DS-PCV . . . . . 303 KIT-DS-CV 304 KKS-2 305
	Drawn bars	PRET 306
	Prefabricated components for air intake and exhaust units	CSQ-PREF, WSQ-PREF . . . . . 307 CSQ-A-PREF, WSQ-A-PREF . . . . . 308 CSQ-K-PREF, WSQ-K-PREF 310

Product	Type	Page
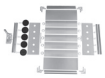	Multi-blade damper components	DSQW-PREF . . . . . 311 DSQW-A-PREF . . . . . 313 DSQOW-A-PREF 316
	Manual riveter	NI-AKB-70 318

ALNOR® ventilation systems
is a registered trademark protected by a technical patent. All modification rights reserved.

Contents

Product	Type	Page
VENTILATION FINISH TRIM		
	Exhaust valves	HHS . . . 321 KW-RM . . . 322 KWI . . . 323 KW-K-RM . . . 324 KWO-RML . . . 326 KWV-RM . . . 328
	Air intake valves	KNI . . . 330 KNV-RM . . . 332 KN-RM . . . 334 KN-K-RM . . . 335 KNT-RML . . . 337
	Mounting frames	RM . . . 339 RML . . . 340 RMIL . . . 341 RMDL . . . 342 ROZ-H . . . 343 ROZ-P . . . 344
	Chrome-nickel air valves	KCN . . . 345
	Plastic valves	ELZ . . . 346 ELZ-I . . . 347 KPP . . . 349
	Air intake- and exhaust vents	UELA . . . 350 UELA-AL . . . 351 UVLA . . . 352 USLA . . . 353 USAV, USAV-BM . . . 354
	Cowled outlets with non-return flaps	USUA . . . 356 USMS-P . . . 357 USMS . . . 358
	External grilles	USUF . . . 359 USAB . . . 360
	Floor grilles	ULMA . . . 361
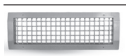	Circular duct grilles	SGR . . . 362 SGR-DA . . . 364

Product	Type	Page
	Rectangular duct grilles	SHR . . . 365 SHR-DAW . . . 368 SHR-RM . . . 369
	Square intake diffusers, and plenum boxes	NCD-S . . . 370 NCD-S-DA . . . 372 PRK . . . 373
	Swirl diffusers and plenum boxes	GCR . . . 374 NKSD-C . . . 376 NKSD-CB . . . 377 NK-SWB . . . 378 PRW . . . 380 NK-SWA . . . 381 PRR . . . 383 RVA . . . 384 RVA-45 . . . 385 PRV . . . 386 EGG . . . 387
	Vane swirl diffusers, plenum boxes	NKSD-R . . . 388 PRR-SD-R . . . 390 NCD . . . 391 PRO . . . 394 PRR-CD . . . 395 RM-NCD . . . 396
	Ball jet diffusers	KHA . . . 397 ITG . . . 399
	Linear slot diffusers	LDS . . . 401 LDS-2-0, LDS-3-0 . . . 403 LDS-2-B, LDS-3-B . . . 404 LDS-2-C, LDS-3-C . . . 405 PR-LDS . . . 406
	Intake diffusers	ACL . . . 407 ACP . . . 409 AKL . . . 411 AKP . . . 413 DKF, DKF-L . . . 415
	Wall-mounted air intake and exhaust vents	CSQ, WSQ . . . 417 CSQ-A, WSQ-A . . . 418 CSQ-K, WSQ-K . . . 419
	Non-return air exhausts	WSOQ . . . 420 DSQOW . . . 421 QILN . . . 422

www.alnor.com.pl

ALNOR® ventilation systems
is a registered trademark protected by a technical patent. All modification rights reserved.

www.alnor.com.pl

Contents

Product	Type	Page
SILENCERS		
	Circular silencers	SIL 432
		SIBL 437
		SIBOL 439
		SIRL 444
		SIBRL 446
		SIBROL 448
		SIL-GL, SI-GL 451
	Silencers	SQLL-25 453
		SQLL-50 455
		SQLL-CR, SQLL-CRQ 457
		SQQL-30 459
		SQQL-B-30 463
	Attenuating bends	BSIL 467
	Flexible silencers	SLEFL 469
		SLEFL-P 471
		SLEAL 473
		SLESD 475
		SLEAF 477
		SLEFD 478
		SLEST 480
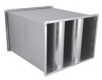	Rectangular silencers and baffles	SLC, SRC, SPC 481
		K-SLC, K-SRC, K-SPC 493

Product	Type	Page
FLEXIBLE DUCTS		
	Semi-flexible ducts	AF-AL 497
		AF-SN 498
	Flexible ducts, insulated, with, antimicrobal coating	ALAD-L 501
		ALAD-3 502
		ALAD-HY-3 504
		ALAD-HY-L 505
		ALSD-L 506
		ALSD-PE-L 507
		ALSD-3 508
		ALSDL-L 509
		ALSDL-PE-L 510
		POAD 512
		POID 514
		ALID-HY-3 515
		ALID-HY-L 516
		PVC-A 517
		COM-F 518
		PVC-R-DUCT, PVC-S-DUCT 519
	Insulated duct sleeves	SLVD-25/SLVD-50 520
		SLVD-PU 521

ALNOR® ventilation systems
is a registered trademark protected by a technical patent. All modification rights reserved.

Contents

Product	Type	Page
FLX-REKU / FLX-REKU-OVAL FLEXIBLE AIR DISTRIBUTION SYSTEM		
	FLX round flexible hose	FLX-HDPE, FLX-HDPE-A 524
	FLX plenum boxes for air valve	FLX-PLO, FLX-PRO. . . . . 526 FLX-PLO-L, FLX-PRO-L. 528 FLX-SRGL-320 530
	FLX plenum boxes for grilles	FLX-PLO-MOV. 531
	Distribution boxes	FLX-PLO-R, FLX-PRO-R 532
	Horizontal plenum boxes	FLX-PLO-PL . . . . . 536 FLX-PLO-R-P 538
	FLX silencer	FLX-SQOL 540
	Offset plenum box	FLX-ODSQL 541
	FLX fittings	FLX-BP. . . . . 542 FLX-RPC, FLX-RSCL . . . . . 543 FLX-RSFCLL . . . . . 544 FLX-SP 545
	FLX dampers	FLX-DAS . . . . . 546 FLX-DAT 547
	Couplings and other accessories	FLX-NSL. . . . . 548 FLX-MSF . . . . . 549 FLX-USZ. . . . . 550 FLX-FAX 551
	FLX end caps	FLX-CS-PVC, FLX-CF-PVC. 552
	FLX plenum boxes for air valve	FLX-PLO-50. . . . . 553 FLX-PLO-L-50 554
	Distribution boxes	FLX-PLO-R-50 555
	Horizontal boxes	FLX-PLO-R-P-50 556

Product	Type	Page
	FLX oval ducts	FLX-HDPE-132-52 557
	FLX plenum boxes with oval connectors	FLX-PRV. 558
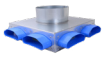	Distribution boxes	FLX-PRV-R 560
	FLX couplings	FLX-VNS . . . . . 561 FLX-VODS . . . . . 562 FLX-VBH, FLX-VBW 563

www.alnor.com.pl

ALNOR® ventilation systems
is a registered trademark protected by a technical patent. All modification rights reserved.

Contents

www.alnor.com.pl

VENTILATION DAMPERS



Regulating dampers
DAT-AKU 568
DARL 571
DAR 572
DARH 573
DAR-CV 574
DAR-PVC 575



Shutoff dampers
DASL 579
DASL-B, DAS-B 581
DASL-CV 582
DAS 583
DAS-CV 584
DAS-PVC 585
DASH 586



Airtight shutoff, dampers
DATL, DAT 587



Shutoff dampers
DAPL-CV 589
DAP-CV 590



Non-return dampers
DAOSL-IN 591
DAOSL 592
DAOS 594
DAOSL-B, DAOS-B 596



Slide-gate dampers
GKL, GK 597
GKML, GKM 598



Bypass dampers
DATVTL 599
DATASL 601



Dampers with actuator mounting
DASML, DASM 603



Airtight dampers with actuator mounting
DATML, DATM 604



Bypass dampers with actuator mounting
DATVTML 605



Iris dampers
GBL 606
GBLM 609

Product *Type* *Page*



Round multiblade dampers
DASQ, DASQL, DASQM, DASQML 610



Rectangular single-blade dampers
DSQ 611



Rectangular multi-blade dampers
DSQW 612
DSQW-A 613



Self-closing rectangular multi-blade dampers
DSQOW 615
DSQOW-A 616

ALNOR® ventilation systems
is a registered trademark protected by a technical patent. All modification rights reserved.

Contents

Product	Type	Page
SEALING PRODUCTS		
	Sealing tapes	TAL . . . . . 620 TALK . . . . . 622 TALT . . . . . 623 TALE . . . . . 624 TLV . . . . . 625 DUCT . . . . . 626 MET . . . . . 627 TAPV-B, TAPV-S . . . . . 628 FOAM-TAPE 629
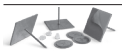	Self-adhesive pins	GWS 630
	Hot-weld pins	GWZ . . . . . 631 GWZ-PI . . . . . 632 GWP 633
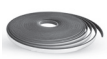	Duct seals	USZ, USZ-CE 634
	Acrylic sealants	SIL-AKR 635
	Roofwork & acetic sealants	SIL-UNI-OCT-300 636
	Caulking foams	PIA-MON 637
	Fire-proof silicones	SIL-PPOZ 638
	Air-operated pump	PIS-POMP 639
	Zinc spray for steel protection and repair	OCSP . . . . . 640 ESLA 641

Product	Type	Page
ACCESS DOORS & CLEANOUTS		
	Access doors	IPR-SNSL . . . . . 644 IPR . . . . . 645 IPR-RRD . . . . . 647 IPFQ . . . . . 649 IPFQ-RD . . . . . 651 IPFD 653
	Flanges	FLT 654
	Clamps	FLKT 655
	Access caps	CPFH . . . . . 656 CSHL . . . . . 657 CSH 658
	Cleanout bends	BPKCL-90, BPKC-90 . . . . . 659 BPBKCL-90, BPBKC-90 660

www.alnor.com.pl

ALNOR® ventilation systems
is a registered trademark protected by a technical patent. All modification rights reserved.

Contents

Produkt	Type	Page
ROOF INSTALLATIONS		
	Roof bases	PD-B1 . . . . . 663 PD-B2 . . . . . 664 PD-DRIP-T . . . . . 665 PD-B3 . . . . . 666 TAGF 667
	Storm collar	BAVE 668
	Roof curbs	COKD 669
	Roof exhaust vents	WD-C1 . . . . . 670 WD-C2 . . . . . 671 WD-B. . . . . 672 WD-D . . . . . 673 WD-E. . . . . 674 WD-G . . . . . 675 VHLA. . . . . 676 VHLA-S . . . . . 678 VHLA-ST . . . . . 679 WD-CS . . . . . 680 WD-TURBO 681
	Take-off bends	BSAVL-90, BSAV-90 . . . . . 682 BSILNL-135, BSILN-135 683
	Roof air intakes	CD-O-P, CD-S-P, CD-P-P . . . . . 684 CD-C1 . . . . . 685 CD-C2 686
	Chimney cowls	RHA. . . . . 687 VHK. 688
	Roof exhaust units	HAN, HAF 690
	Roof hood bases	PDQ-AI . . . . . 692 PDQ-AII. . . . . 693 CQKD 694
	Roof air intake type A	CDQ-A. . . . . 695 CDQ-B. 696

Product	Type	Page
	Louver roof air exhaust hoods	WDQ-A . . . . . 697 WDQ-B . . . . . 698 WDQ-E 699
	Air intake and exhaust bends	BFQN-135 700

www.alnor.com.pl

ALNOR® ventilation systems
is a registered trademark protected by a technical patent. All modification rights reserved.

Contents

Product	Type	Page
EQUIPMENT & ACCESSORIES		
	Decentralised heat recovery unit	HRU-WALL . . . . . 703 HRU-WALL-RC. 707
	Heat recovery units	HRU-PremAIR 711
	Accessories	FILTERS . . . . . 715 CONTROLLES . . . . . 715 SENSOR CO2, SENSOR RH . . . . 716 INTERNET GATE . . . . . 716 MOBILE APLICATION . . . . . 717 HRQ-PremAIR-HDE, ... 719 HRQ-PremAIR-HDE-CO1 719
		HRU-MinistAir-W-250 . . . . . 721 HRU-MinistAir-W-450 726
	Accessories	HRU-MinistCONT-Man. . . . . 731 FILTERS 732
	Energy recovery ventilators	HRU-ERGO 733
	Accessories	HRU-CONTR . . . . . 738 HRU-CONTR-TPAD . . . . . 739 HRE-ERGO heat exchanger . . . 740
	CAV regulators	CFR-PC-ABS, CFR-PC-ABS-HP . . . . . 741 RACAV 747
	VAV regulators	RAVAV . . . . . 751 RAVAV-Q. 760
	PAV regulators	RAPAV 771
	Duct hot water heater	HDW 780
	Duct electric heaters	HDE . . . . . 789 HDE-CO. 794
	Accessories	PULSER . . . . . 798 TTC2000 . . . . . 800 TG-K330 . . . . . 801 R31 . . . . . 802 TM1-P 803

Product	Type	Page
	Duct fans	DV . . . . . 804 DV-PP . . . . . 808 DV-PP-L. . . . . 811 DV-SQ 814
	Roof fans	DV-ROF-R . . . . . 816 DV-ROF-V . . . . . 819 DV-ROF-RHT 822
	Speed controllers	DV-REG-L-1, DV-REG-L-2,5 . . . . . 824 DV-REG-2, DV-REG-5 825
	Fan roof bases	PDI-BRF, PDI-BRF-45, PDI-S- BRF . . . . 826 PDI-BRF-PLATE . . . . . 828 PDI-BRF-KILL, PDI-BRF-KILL-45 . . . . 829 PDI-BRF-KILL-UP . . . . . 830 PDI-BRV, PDI-BRV-45, PDI-S-BRV . . . . 831 PDI-BRV-PLATE . . . . . 832 PDI-BRV-KILL, PDI-BRV-KILL-45. . . . 833 PDI-BRV-KILL-UP. 834 PD-RHT-315, PDI-RHT-315 835
	Actuators	BELIMO . . . . . 836 CM24-L, CM230-L . . . . . 837 LMC24A, LMC230A . . . . . 838 LM24A, LM230A. . . . . 839 NM24A, NM230A. . . . . 840 SM24, SM230 . . . . . 841 LF24, LF230 . . . . . 842 NF24A, NF230A . . . . . 843 SF24A, SF230A. . . . . 844 DM-ML, DM-FL . . . . . 846 DM-ML-06 . . . . . 848 DM-ML-08 . . . . . 850 DM-DM-FL-05 852
	Fire dampers with air valve	FDA-BU-RML . . . . . 854 CFDM-V. 856
	Shut-off fire dampers	FDA-12-T, FDA-12-M . . . . . 859 FDA2-12-T, FDA-12-M 863 FDA2-12-T, FDA-12-M 868

www.alnor.com.pl

ALNOR® ventilation systems
is a registered trademark protected by a technical patent. All modification rights reserved.

www.alnor.com.pl

Contents

Product	Type	Page
THERMAL INSULATION		
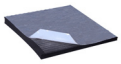	Insulation	ARMAFLEX, K-FLEX-STDH,INSUL-RXT . . 877 FOAM-B . . . . . 878 FOAM-G . . . . . 879 FOAM-AB, FOAM-AG 880
FILTERS		
	Smog duct filter	e-MOCarz . . . . . 883 MOCarz, MOCarz-CA 886
	Filters	UFI . . . . . 889 UFI-W . . . . . 891 F-STR . . . . . 892 FSBQL . . . . . 894 FSBQ-I . . . . . 896 FSBQ-W . . . . . 897 FSCQ . . . . . 898 FSQ 899

Product	Type	Page
RECTANGULAR DUCTS AND FITTINGS		
	Rectangular ducts	QDN 906 QD1 907
	Rectangular bends	QBF . . . . . 908 QBFR 909
	Rectangular elbows	QB . . . . . 910 QBR 911 QBR1 912
	Rectangular reducers	QPR2 . . . . . 913 PR7, PRL7 . . . . . 914 QPR6 . . . . . 915 PR1, PRL1 916
	Rectangular offsets	QPR3 . . . . . 917 QPR4 918
	Rectangular T-pieces & X-pieces	TR . . . . . 919 TR1 . . . . . 920 TR7 . . . . . 921 TR8 . . . . . 922 TR9 . . . . . 923 CZ2 . . . . . 924 TR2 . . . . . 925 CZ1 . . . . . 926 TR3 . . . . . 927 TR5 . . . . . 928 TR4 929
	Round duct take-off	TR6 930
	Rectangular flexible duct connectors	QILA 931
	End caps	QES 932

ALNOR® ventilation systems
is a registered trademark protected by a technical patent. All modification rights reserved.

Contents

Product	Type	Page
IZOL® SYSTEM PRE-INSULATED DUCTS & FITTINGS		
	Pre-insulated ducts	SPRI . . . . . 937 SPRPI 938
	Pre-insulated bends	BSLI-90 . . . . . 939 BSLI-60 . . . . . 940 BSLI-45 . . . . . 941 BSLI-30 . . . . . 942 BSLI-15 943
	Pre-insulated reducers	RSCLLI 944
	Pre-insulated T-pieces	TPCLI 948
	Pre-insulated couplings	NSLI . . . . . 951 MSFI 952
	Pre-insulated end caps	CPFI . . . . . 953 CSLI 954
	Pre-insulated dampers	DASLI 955

Product	Type	Page
FOAM® SYSTEM RUBBER-INSULATED DUCTS & FITTINGS		
	Rubber foam insulated ducts	F..-SPR-C 960
	Rubber foam insulated bends	F..-BPL 961
	Rubber foam insulated reducers	F..-RPCL 962
	Rubber foam insulated T-pieces	F..-TPCL 964
	Rubber foam insulated couplings	F..-NSL . . . . . 965 F..-MSF 966

www.alnor.com.pl

ALNOR® ventilation systems
is a registered trademark protected by a technical patent. All modification rights reserved.

www.alnor.com.pl

Contents

Product	Type	Page
CHEMICAL-RESISTANT PLASTIC DUCTS & FITTINGS		
 Plastic round ducts	PVC-SRGL	971
 Plastic bends	PVC-BPF-90, PVC-BSF-90 PVC-BPF-45, PVC-BSF-45	972 972
 Plastic reducers	PVC-RPCF	974
 Plastic T-pieces	PVC-TPCF-90 PVC-TPVF-45	978 980
 Plastic Y-piece	PVC-YSVF	982
 Plastic couplings	PVC-MSF	984
 Plastic angle take-off	PVC-ASVF-30	986
 Plastic end caps	PVC-CPF	987
 Plastic flanges	PVC-FLSF PVC-GASK	988 989
 Plastic air diffuser	PVC-NKSD-R PVC-SHR-A, PVC-SHR-C, PVC-SHR-S PVC-SHR-RMO	990 991 992
 Plastic sound attenautor	PVC-SILF	993
 Plastic dampers	PVC-DATF-D, PVC-DATF PVC-DATFM PVC-DASQF-V, PVC-DASQF-H	996 998 1000
 Plastic roof base	PVC-TAGF	1001
 Plastic air exhausts	PVC-WDF	1004

Product	Type	Page
 Plastic rectangular ducts	PVC-QDNF, PVC-QDNT, PVC-QDN	1008
 Plastic rectangular bends	PVC-QBFF, PVC-QBFT	1009
 Plastic rectangular reducers	PVC-QPR6F PVC-QPR2F PVC-PR7F	1010 1011 1012
 Plastic rectangular T-pieces	PVC-TRF	1013

ALNOR® ventilation systems
is a registered trademark protected by a technical patent. All modification rights reserved.

Contents

Product	Type	Page
TRANS-Quick System		
	Quick-release clamps	FLKA . . . . . 1017 FLKA-C . . . . . 1018 FLKA-C-D 1019
	Ducts	SRGLQT . . . . . 1020 SRGWQT . . . . . 1022 TELQT 1024
	Bends	BSQT . . . . . 1025 BSDQT 1026 BSD2QT 1027
	Reducers	RSCLQT 1028
	T-pieces	TPCQT . . . . . 1030 TPRQT . . . . . 1032 TSVQT . . . . . 1036 TVRQT-45 . . . . . 1038 YSVQT-45 1042
	Couplings	NSLQT . . . . . 1043 MSFQT 1044
	Take-offs	ILSQT . . . . . 1045 ILAFQT 1046
	End caps	CSHQT 1047
	Silencer	SILQT-GL 1048
	Monifold for dust extraction	MPRQT 1050
	Extraction hose	PUQT-AS, PUQT 1051
	Access door	IPRQT-DUCT-H 1052
	Dampers	DASQT, DASQT-B . . . . . 1053 DATQT, DATQT-B . . . . . 1055 DAOSQT . . . . . 1057 GKQT . . . . . 1058 GKMQT 1059

Product	Type	Page
SMOKE SYSTEM - SINGLE-COMPARTMENT CIRCULAR SMOKE VENTILATION DUCTS WITH COMPONENTS		
	Spiral smoke extraction ducts	SPR-Z-SMO 1068
	Smoke extraction bends	BSL-SMO-90 . . . . . 1070 BSL-SMO-45 . . . . . 1072 BSDL-SMO-90 1074
	Smoke extraction reducers	RSCLL-SMO, RSCLFL-SMO . . . . . 1076 RSLL-SMO, RSLFL-SMO 1076
	Smoke extraction T-pieces	TSCL-SMO, TSL-SMO . . . . . 1080 TPCL-SMO, ... 1085 YSVL-SMO 1090
	Saddle branches	SSCL-SMO, SSL-SMO . . . . . 1093 SPSL-SMO 1098
	Couplings	NSL-SMO . . . . . 1102 MSF-SMO 1103
	Branches	ILSL-SMO 1104
	Take-off with a mesh	ILSNL-SMO . . . . . 1105 ILSNF-SMO 1106
	Angle take-off	ASVL-45-SMO 1107
	Flexible duct connector	ILA-NSL-SMO-SIL . . . . . 1108 ILA-FLS-SMO-SIL 1109
	Smoke extraction end caps	CSL-SMO . . . . . 1110 CSF-SMO . . . . . 1111 CSFH-SMO 1112
	Smoke extration grille	SGR-SMO 1113
	Silencer	SIL-GL-SMO 1116

www.alnor.com.pl

ALNOR® ventilation systems
is a registered trademark protected by a technical patent. All modification rights reserved.

www.alnor.com.pl

Contents

Product	Type	Page
DUCTS AND FITTINGS MADE OF EPP		
	Ventilation ducts	EPP-SRGL. 1125
	Ventilation bends	EPP-BPF-90 . . . . . 1128 EPP-BPF-45 1130
	Couplings	EPP-MSF. 1132

ALNOR® ventilation systems
is a registered trademark protected by a technical patent. All modification rights reserved.

SPIRAL®System Round Ventilation Ducts and Fittings

ALNOR reserves the right to modify technical specifications in line with the policy of continuous product improvement.

ALNOR® ventilation systems
is a registered trademark protected by a technical patent. All modification rights reserved.

System description

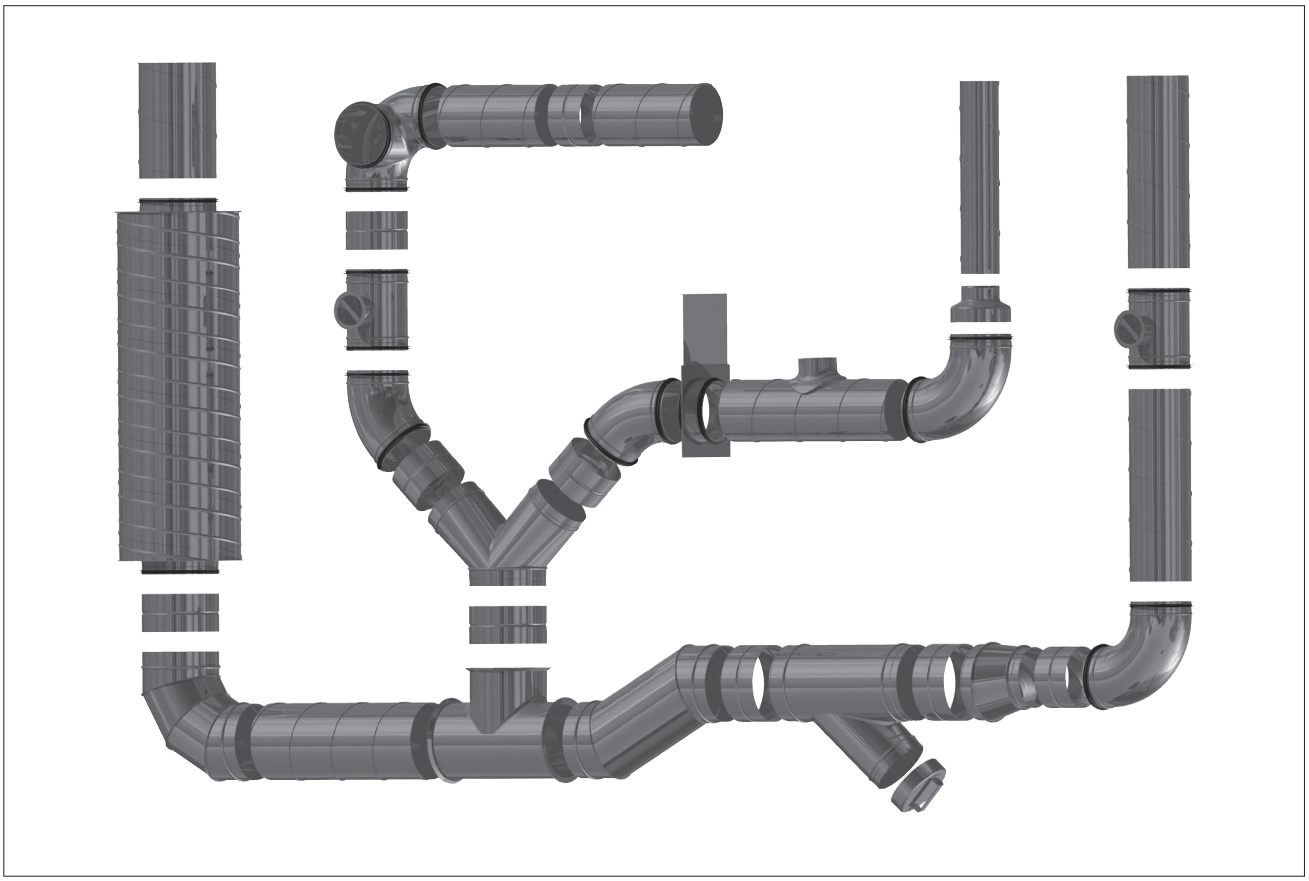

Cost-effective ventilation

Given the high costs of air treatment and a boom in the HVAC sector, ventilation systems must satisfy very stringent requirements. As a result, it is essential to ensure that duct connections are sufficiently leak-proof to keep the costs of operation at economically viable levels. To tackle this problem successfully, ALNOR Systemy Wentylacji Sp. z o.o. has developed a new end-to-end SPIRAL® system.

Application advantages

- Quick and easy installation.
- The gaskets are factory-installed without play to ensure their proper seating when connections are made.
- This allows accurate mounting of fittings without the risk of breaching the seal or air leaks.
- An environment-friendly Installation method which requires no silicones containing toxic solvents that could evaporate into the ductwork.
- The system can be installed in all weather conditions.
- Temperature resistance: -30˚ to +100 ˚C.
- Maximum operating vacuum: up to 3000 Pa.
- Maximum operating pressure: up to 5000 Pa.
- Internal and external manufacturing control.
- An aesthetic finish which is particularly important for exposed systems.

Rubber gaskets

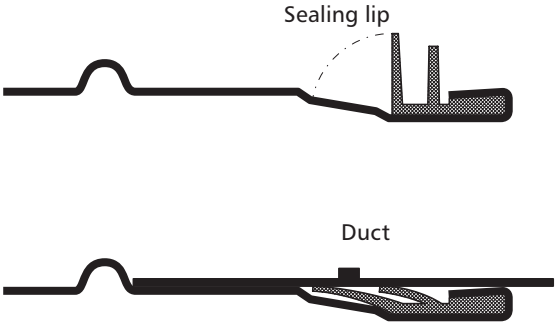

The gaskets are made from uniform EPDM rubber. The gasket is mounted at the end of the fitting and held tight in the fitting's hemmed rim. This keeps the gasket firmly in place during and after the installation phase.

Rubber gaskets must meet high quality standards, and therefore we have chosen to make them from EPDM rubber. This material has superior resistance to ozone, UV radiation, and temperature variations, thus providing longer service life.

EPDM gaskets can withstand temperatures of -30˚C to 100˚C.

ALNOR® ventilation systems
is a registered trademark protected by a technical patent. All modification rights reserved.

EPDM gaskets can withstand temperatures of -30˚C to 100˚C.

For heat-resistant HVAC systems, SPIRAL®system is also available with silicone gaskets which can withstand continuous temperatures of -70˚C to 150°C and transient temperatures of 90˚C to 200˚C.

SPIRAL®system round ducts and fittings are certified for compliance with hygienic standards:
a) HK/B/1652/03/2007 - made from aluminium sheet
b) HK/B/1652/01/2007 - made from galvanized or stainless steel sheet
//

SPIRAL®system round ducts and fittings with gaskets are certified by SITAC for air tightness class D - Certificate no. 0103/07.

A leak-proof ductwork

The SPIRAL®system is a proven system of quick-coupled spiral ducts and fittings provided with factory-installed EPDM gaskets. The gaskets provide leak-proof and durable joints between SPIRAL®system components. The system components are available in a full range of diameters from Ø80 to Ø1250 mm. SPIRAL system meets the requirements of PN-EN 12237 for air tightness class D (Certificate no. 0103/07).
The high-quality of workmanship and factory-installed rubber gaskets enable easy and quick assembly of ventilation ductwork. Ductwork based on SPIRAL®system components guarantees long and leak-proof service life and requires no additional sealants.

The key benefit

The gasket fits snugly along the entire circumference of the duct.

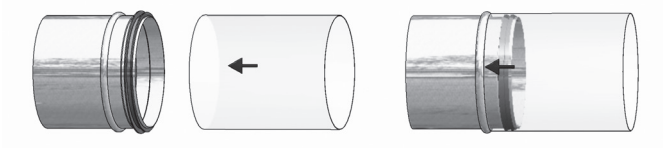

Leak testing

All SPIRAL®system components are leak-tested. SPIRAL system meets the requirements of PN-EN 12237 for air tightness class D (Certificate no. 0103/07).

The sealing performance chart is available for the full diameter range, from Ø80 to Ø1250 mm.

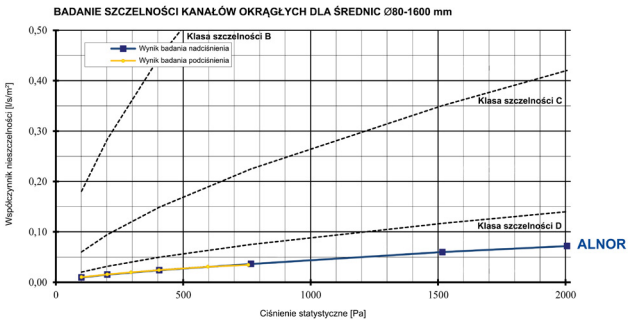

All gaskets of SPIRAL®system components are leak-tested according to the procedure described below.

Testing procedure for SPIRAL®system gaskets:
- Visual inspection of the surface quality.
- Gauging of the gasket internal diameter which is important if different materials are used.
- Inspection of the gasket profile dimensions and compliance with pre-defined dimension tolerances.
- Deformation tests under simulated installation conditions using a test rig. Elasticity tests to check the final and complete seal of the gasket.

Round ducts and fittings with gaskets **SPIRAL®system** is certified **by SITAC** for air tightness class D.

Round ducts and fittings are TÜV-certified for the quality and safety performance.

ALNOR® ventilation systems
is a registered trademark protected by a technical patent. All modification rights reserved.

Installation

Before installation
Ducts to be installed must be clean.

Duct trimming
Trim the ducts to the correct angle and size, and deburr the edges.

Installation of fittings
- Check that the ducts and fittings to be installed are not damaged.
  Thoroughly inspect gaskets for damage.
- Slide the fitting into the duct up until you reach the stop. Try sliding the piece in while twisting it left and right to make the joining easier.
- Fasten the piece to the duct with sheet metal screws or aircraft rivets.
  Follow the bolting / riveting pattern to avoid misalignment between the joined ductwork components. It is best to install the screws / rivets alternately on opposite sides.
- The table below shows the recommended thickness of sheet metal screws and aircraft rivets:

Ød (mm)	*min. diameter (mm)*	*number of screws*
80 – 250	3.2	3
280 – 500	3.2	4
560 – 710	3.2	6
710 - 1250	4.0	12
1400 – 1600	4.0	16

Place the sheet metal screws (or aircraft rivets) at an even spacing around the joint. Make sure that you do not pierce the gasket. To do this, fasten the screws 10 mm away from the duct edge and the stop. If the joint is not properly coupled, it is best to use new components. If this is impossible, you can seal the screw / rivet holes.

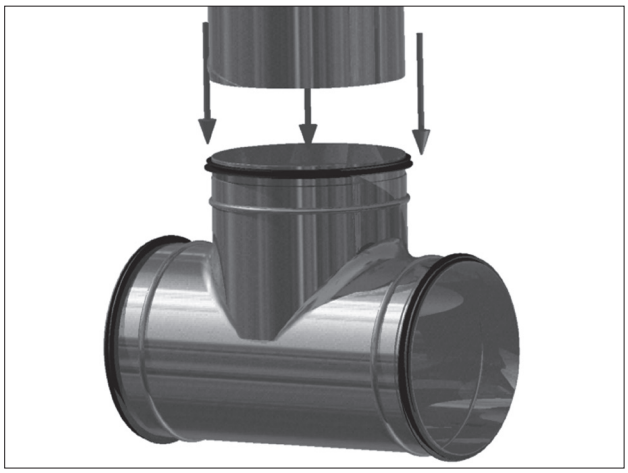

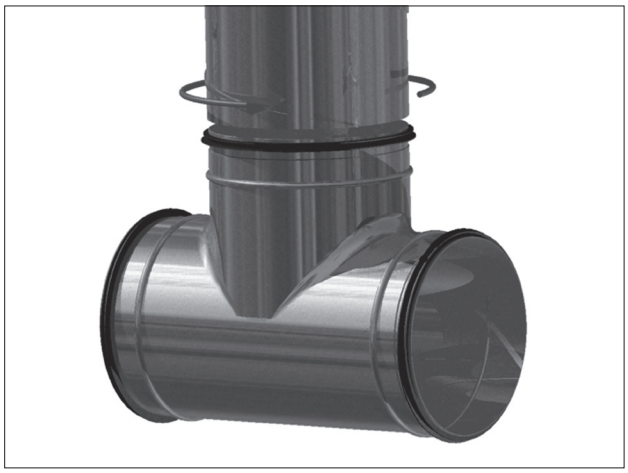

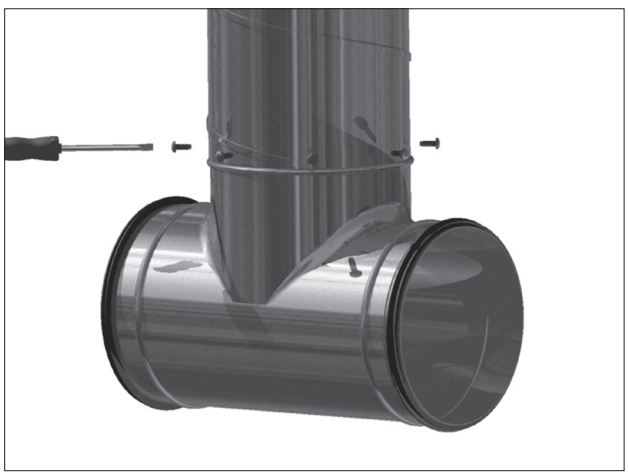

ALNOR® ventilation systems
is a registered trademark protected by a technical patent. All modification rights reserved.

Tolerance limits for ducts

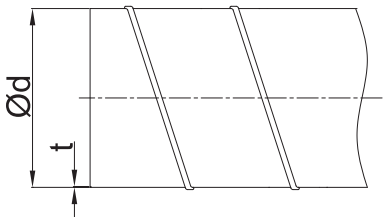

diameter $Ød_{nom}$ (mm)	min. - max. diameter $Ød_{min}$ - $Ød_{max}$ (mm)	sheet thickness t_{nom} (mm)
80	80.0 - 80.5	0.5
100	100.0 - 100.5	0.5
112	112.0 - 112.5	0.5
125	125.0 - 125.5	0.5
140	140.0 - 140.6	0.5
150	150.0 - 150.6	0.5
160	160.0 - 160.6	0.5
180	180.0 - 180.7	0.5
200	200.0 - 200.7	0.5
224	224.0 - 224.8	0.5
250	250.0 - 250.8	0.5
280	280.0 - 280.9	0.5
300	300.0 - 300.9	0.5
315	315.0 - 315.9	0.5
355	355.0 - 356.0	0.6
400	400.0 - 401.0	0.6
450	450.0 - 451.1	0.6
500	500.0 - 501.1	0.6
560	560.0 - 561.2	0.7
600	600.0 - 601.2	0.7
630	630.0 - 631.2	0.7
710	710.0 - 711.5	0.7
800	800.0 - 801.6	0.7
900	900.0 - 902.0	0.9
1000	1000.0 - 1002.0	0.9
1120	1120.0 - 1122.5	0.9
1250	1250.0 - 1252.5	0.9
1400	1400.0 - 1403.0	1.2
1500	1500.0 - 1503.0	1.2
1600	1600.0 - 1603.3	1.2
1800	1800.0 - 1803.6	1.2
2000	2000.0 - 2004.0	1.5
2200	2200.0 - 2205.0	1.5
2400	2400.0 - 2406.0	1.5

Tolerance limits for fittings

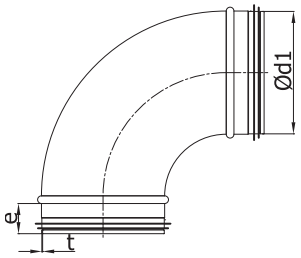

diameter $Ød_{nom}$ (mm)	min. - max. diameter $Ød_{min}$ - $Ød_{max}$ (mm)	sheet thickness t_{nom} (mm)
80	78.8 - 79.3	0.5
100	98.8 - 99.3	0.5
112	110.5 - 111.3	0.5
125	123.8 - 124.3	0.5
140	138.7 - 139.3	0.5
150	148.7 - 149.3	0.5
160	158.7 - 159.3	0.5
180	178.6 - 179.3	0.5
200	198.6 - 199.3	0.5
224	222.5 - 223.3	0.5
250	248.5 - 249.3	0.5
280	278.4 - 279.3	0.5
300	298.4 - 299.3	0.5
315	313.4 - 314.3	0.5
355	353.3 - 354.3	0.5
400	398.3 - 399.3	0.5
450	448.2 - 449.3	0.5
500	498.2 - 499.3	0.5
560	558.1 - 559.3	0.6
600	598.2 - 599.3	0.6
630	628.1 - 629.3	0.6
710	708.0 - 709.3	0.7
800	798.0 - 799.3	0.7
900	897.9 - 899.3	0.7
1000	997.9 - 999.3	0.9
1120	1117.8 - 1119.3	0.9
1250	1247.8 - 1249.3	0.9
1400	1397.3 - 1299.2	1.0
1500	1500.0 - 1503.0	1.0
1600	1597.1 - 1599.1	1.0
1800	1797.0 - 1799.0	1.0
2000	1996.8 - 1998.8	1.0
2200	2196.7 - 2198.7	1.0
2400	2396.5 - 2398.5	1.0

ALNOR® ventilation systems
is a registered trademark protected by a technical patent. All modification rights reserved.

Tolerance limits and specifications

Dimensions - Fittings

SPIRAL®system must meet the tolerance limits given in the table below to provide the required sealing performance.

$Ød_1$ nominal (mm)	e (mm)	tolerance (mm)	
80-315	36	+0	-6
355-400	55	+0	-6
450-630	75	+0	-10
710-900	100	+0	-10
1000-1600	115	+0	-20

Dimension and angle tolerances

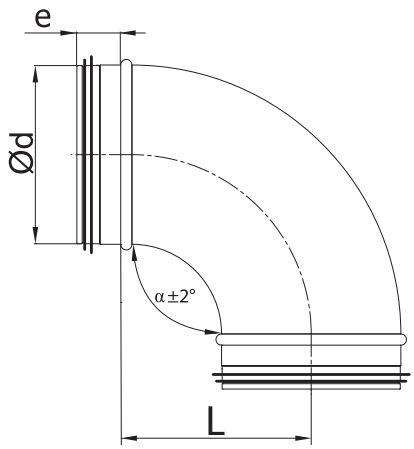

length L, r, r_m	tolerance
≤ 15	± 3
(15-100	± 7
> 100	+ 10 - 15
L (ducts)	± 0.5%

Materials

Ducts and fittings are made from galvanized steel sheet.

Other materials are available on request:
1.4301/304 stainless steel sheet
1.4404/316L stainless steel sheet, molybdenum-enriched
AW-1050A H24 aluminium sheet
M1E z4 copper sheet

Always indicate the material code in your purchase order. If no material code is specified in the order, the default material will be used, i.e. galvanized steel sheet.

Examples of material codes:

SPR-K-…	- 1.4301/304
SPR-K-…..-…..-316L	- 1.4404/316L
SPR-A-….	- AW-1050A H24
SPR-CU-….	- M1E z4

Components made from stainless steel have to be inspected at least every 6 months.

Product code example
Product code: BSL - A - 100 - 90

type
material
$Ød_1$
°

Marking

ALNOR products carry the Polish conformity mark B for construction products and product codes as shown in the technical specifications listed in this catalogue.

Round components with gaskets come with Eurovent Ventilation Ducts Certificate for air tightness class D.

ALNOR® ventilation systems
is a registered trademark protected by a technical patent. All modification rights reserved.

Tolerance limits for stainless spiral ducts and fittings

1.4301 / 304 stainless steel sheet components

Ducts		*Fittings*	
diameter $Ød_{nom}$ *(mm)*	*sheet thickness* t_{nom} *(mm)*	diameter $Ød_{nom}$ *(mm)*	*sheet thickness* t_{nom} *(mm)*
80	0.5	80	0.5
100	0.5	100	0.5
112	0.5	112	0.5
125	0.5	125	0.5
140	0.5	140	0.5
150	0.5	150	0.5
160	0.5	160	0.5
180	0.5	180	0.5
200	0.5	200	0.5
224	0.5	224	0.5
250	0.5	250	0.5
280	0.5	280	0.5
300	0.5	300	0.5
315	0.5	315	0.5
355	0.5	355	0.5
400	0.5	400	0.5
450	0.5	450	0.5
500	0.5	500	0.5
560	0.7	560	0.5
600	0.7	600	0.5
630	0.7	630	0.5
710	0.7	710	0.7
800	0.7	800	0.7
900	0.7	900	0.7
1000	0.7	1000	0.7
1120	0.7	1120	0.7
1250	0.7	1250	0.7

Spiral ducts and fittings made from stainless steel are recommended for environments featuring highly humid air, high temperatures or airborne contaminants which can cause corrosive damage to galvanized steel sheet. ALNOR has successfully tested its fittings with gaskets for compliance with EN 12237's requirements for air tightness class C. Except for the BP and BPL bends, which are provided with individual technical data sheets and manufactured by press forming, all ventilation components are made of sheet segments. Ventilation ducts with thermal insulation, which are available on request, can have stainless steel sheet installed inside and/or outside.

1.4404 / 316L stainless steel sheet components

Ducts		*Fittings*	
diameter $Ød_{nom}$ *(mm)*	*sheet thickness* t_{nom} *(mm)*	diameter $Ød_{nom}$ *(mm)*	*sheet thickness* t_{nom} *(mm)*
80	0.6	80	0.6
100	0.6	100	0.6
112	0.6	112	0.6
125	0.6	125	0.6
140	0.6	140	0.6
150	0.6	150	0.6
160	0.6	160	0.6
180	0.6	180	0.6
200	0.6	200	0.6
224	0.6	224	0.6
250	0.6	250	0.6
280	0.6	280	0.6
300	0.6	300	0.6
315	0.6	315	0.6
355	0.6	355	0.6
400	0.6	400	0.6
450	0.6	450	0.6
500	0.6	500	0.6
560	0.6	560	0.6
600	0.6	600	0.6
630	0.6	630	0.6
710	0.6	710	0.6
800	0.6	800	0.6
900	0.6	900	0.6
1000	0.8	1000	0.8
1120	0.8	1120	0.8
1250	0.8	1250	0.8

Spiral ducts and fittings made from 1.4404 / 316L / VA4 stainless-steel sheet are designed for industrial use under heavy-duty conditions. Ducts and fittings made from molybdenum-enriched steel are suitable for swimming pools, where resistance to chlorine must be ensured. However, this material has a very high hardness and requires both a high degree of expertise and world-class processing machines. Stainless-steel sheet ducts and fittings with EPDM gaskets have been successfully tested for compliance with air tightness class C. All fittings are made of segments assembled by standard hemming and seaming.

ALNOR® ventilation systems
is a registered trademark protected by a technical patent. All modification rights reserved.

Tolerance limits for aluminium or copper ventilation ducts and fittings

AW-1050A H24 aluminium sheet components

Ducts		*Fittings*	
diameter $Ød_{nom}$ *(mm)*	*sheet thickness* t_{nom} *(mm)*	diameter $Ød_{nom}$ *(mm)*	*sheet thickness* t_{nom} *(mm)*
80	0.8	80	0.8
100	0.8	100	0.8
112	0.8	112	0.8
125	0.8	125	0.8
140	0.8	140	0.8
150	0.8	150	0.8
160	0.8	160	0.8
180	0.8	180	0.8
200	0.8	200	0.8
224	0.8	224	0.8
250	0.8	250	0.8
280	0.8	280	0.8
300	0.8	300	0.8
315	0.8	315	0.8
355	0.8	355	0.8
400	0.8	400	0.8
450	0.8	450	0.8
500	0.8	500	0.8
560	0.8	560	0.8
600	0.8	600	0.8
630	0.8	630	0.8
710	0.8	710	0.8
800	0.8	800	0.8
900	0.8	900	0.8

Whenever the weight of the ventilation system weight is a critical factor, aluminium spiral ducts and fittings are used. Aluminium is much lighter than galvanized steel and therefore it helps to reduce the overall system's weight by as much as 40%. Only the best-in-class manufacturers have the capacity to supply ventilation fittings with gaskets that meet the requirements of PN-EN 12237:2005 for air tightness class D. All fittings, whatever their size, are manufactured in spot-welded segments instead of seam-welded sections. Aluminium sheet can be used as an outer cladding for ventilation systems with thermal insulation to provide a very neat and modern finish of the ductwork.

M1E z4 copper sheet components

Ducts		*Fittings*	
diameter $Ød_{nom}$ *(mm)*	*sheet thickness* t_{nom} *(mm)*	diameter $Ød_{nom}$ *(mm)*	*sheet thickness* t_{nom} *(mm)*
80	0.6	80	0.5
100	0.6	100	0.5
112	0.6	112	0.5
125	0.6	125	0.5
140	0.6	140	0.5
150	0.6	150	0.5
160	0.6	160	0.5
180	0.6	180	0.5
200	0.6	200	0.5
224	0.6	224	0.5
250	0.6	250	0.5
280	0.6	280	0.5
300	0.6	300	0.5
315	0.6	315	0.5
355	0.6	355	0.6
400	0.6	400	0.6
450	0.6	450	0.6
500	0.6	500	0.6

Copper ventilation systems are a new thing in Poland. Copper ductwork offers the natural benefits of the material, such as the deposition of patina which has bactericidal properties. This provides much healthier, germ-free air. This advantage is of essential importance for healthcare facilities or rooms used by allergy sufferers. Another advantage of copper ductwork is the colour which changes to greenish patina. As a result, copper ductwork is perfect for installation in historic buildings, churches, or retro-styled facilities.

ALNOR® ventilation systems
is a registered trademark protected by a technical patent. All modification rights reserved.

Spiral ventilation ducts
SPR

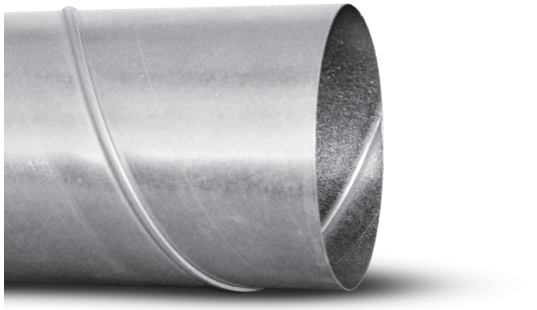

Description

Round spiral ducts are available in diameters from 80 mm to 1600 mm. The ducts are available as made of 0.4 mm to 1.8 mm thick metal sheet; the ducts in diameters of DN 160 mm or greater are also available with corrugation for improved stiffness and vacuum strength. The corrugations are available as a standard feature for diameters of DN 250 mm to DN 1600 mm. All spiral ducts made from galvanized steel sheet, stainless steel sheet or aluminium sheet meet requirements of air tightness class D according to EN 12237.

Available materials — Product code example

SPR-C-... – galvanized steel sheet
SPR-K-… — 1.4301/304 stainless steel sheet
SPR-K-….-…-….-316L — 1.4404/316L stainless steel sheet, molybdenum-enriched
SPR-A-…. — AW-1050A H24 aluminium sheet
SPR-CU-…. — M1E z4 copper sheet

Product code example:

Product code: **SPR-C - aaa - bbb - ccc**

type
Ød$_1$
thickness
length

Product certified by TÜV Rheinland

Dimensions

corrugated

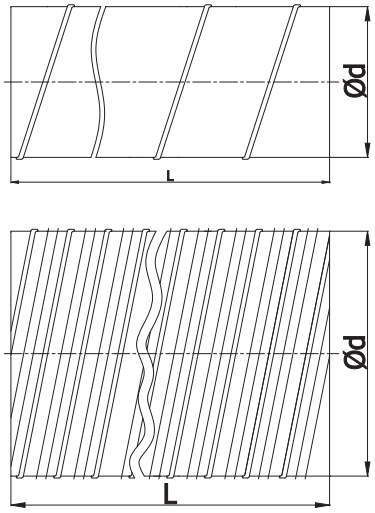

Ød$_{nom}$ (mm)	πd (m)	$\frac{\pi d^2}{4}$ (m^2)
80	0.251	0.005
100	0.314	0.008
125	0.393	0.012
140	0.440	0.015
150	0.471	0.018
160	0.502	0.020
180	0.565	0.025
200	0.628	0.031
224	0.703	0.039
250	0.785	0.049
280	0.879	0.062
300	0.942	0.071
315	0.989	0.078
355	1.115	0.099
400	1.256	0.126
450	1.413	0.159
500	1.570	0.196
560	1.758	0.246
600	1.884	0.283
630	1.978	0.312
710	2.229	0.396
800	2.512	0.503
900	2.826	0.636
1000	3.140	0.785
1120	3.517	0.985
1250	3.925	1.227
1400	4.396	1.539
1600	5.024	2.010

ALNOR® ventilation systems
is a registered trademark protected by a technical patent. All modification rights reserved.

Spiral ventilation ducts

SPR

Technical specifications

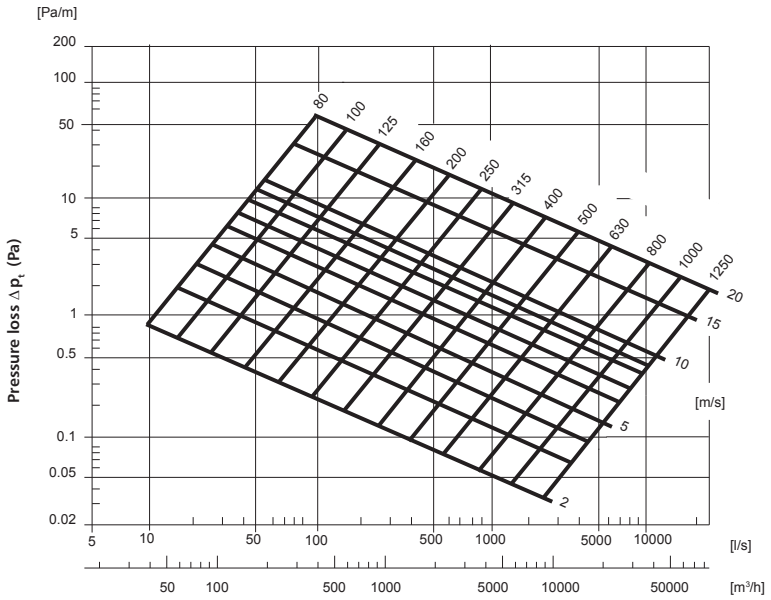

Volumetric flow rate q

Vacuum

Ventilation systems operated at high vacuum are exposed to a high risk of ductwork deformation which usually begins at the structurally weakest parts of the ductwork, e.g. at the points of dents incurred during transport, handling or installation. Therefore it is of critical importance to properly choose the design and size of ducts according to the pre-defined operating vacuum. The following table shows the maximum operating vacuum (Pa) levels for specific types of ducts.

L [m]	*Ød [mm]*	*t=0.4 [mm]*	*t=0.5 [mm]*	*t=0.6 [mm]*	*t=0.7 [mm]*	*t=0.9 [mm]*	*t=1.25 [mm]*
6	80	-	-	-	-	-	-
	100	-	-	-	-	-	-
	125	-	-	-	-	-	-
	150	-	23000	-	-	-	-
	160		18500	22000	-	-	-
	200		10500	15000	-	-	-
	250		5000	8800	-	-	-
	300		4500	4600	-	-	-
	315	2700	3500	3900	23000	-	-
	355		3200	3700	18000	-	-
	400		1900	2800	14500	-	-
	450		1700	2300	9500	23000	-
	500		1500	1900	7000	15000	-
	560		1100	1600	5900	12000	-
	600		900	1500	4600	10200	-
	630			1400	3900	8500	-
3	710			3200	5800	9100	22500
	800			2500	4500	6700	14800
	900				3100	5200	10900
	1000					4200	8400
	1120					3500	6700
	1250					2800	4900
	1500						3800

ALNOR® ventilation systems
is a registered trademark protected by a technical patent. All modification rights reserved.

SPIRAL ventilation ducts in racks

SPR-C-MR

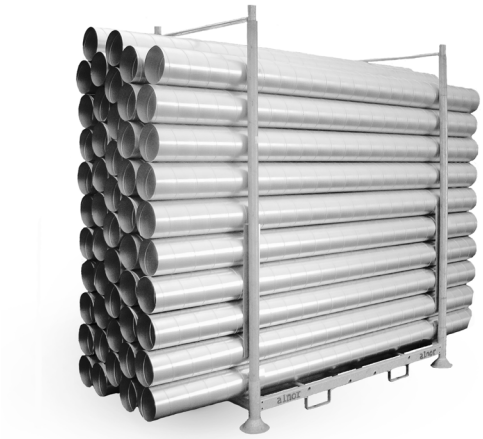

Description

Spiral duct sets are available as wholesale units in standard nominal diameters. All sets are composed of 1 to 3 different duct nominal diameters in the same quantity. As a result, the units can be handled on and off transport vehicles with a forklift truck in just 30 minutes. It is also easier and less time-consuming to check the quality and quantity of the supplied components.

Product code example

Product code: **SPR-C-MR**

type _____

Dimensions

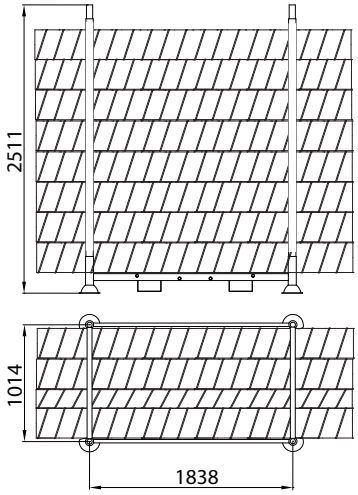

ALNOR® ventilation systems
is a registered trademark protected by a technical patent. All modification rights reserved.

SPIRAL ventilation ducts in racks

SPR-C-MR

Product code	*D (mm)*	*type*	*quantity (pcs)*
SPR-C-MR-100-203	100	SPR-C-100-050-0300	203
SPR-C-MR-125-100-133	100	SPR-C-100-050-0300	133
	125	SPR-C-125-050-0300	133
SPR-C-MR-125-133	125	SPR-C-125-050-0300	133
SPR-C-MR-150-80	150	SPR-C-150-050-0300	80
SPR-C-MR-160-100-80	100	SPR-C-100-050-0300	80
	160	SPR-C-160-050-0300	80
SPR-C-MR-160-125-80	125	SPR-C-125-050-0300	80
	160	SPR-C-160-050-0300	80
SPR-C-MR-160-80	160	SPR-C-160-050-0300	80
SPR-C-MR-200-160-53	160	SPR-C-160-050-0300	53
	200	SPR-C-200-050-0300	53
SPR-C-MR-200-53	200	SPR-C-200-050-0300	53
SPR-C-MR-250-200-31	200	SPR-C-200-050-0300	31
	250	SPR-C-250-050-0300	31
SPR-C-MR-250-31	250	SPR-C-250-050-0300	31
SPR-C-MR-315-21	315	SPR-C-315-050-0300	21
SPR-C-MR-315-250-21	250	SPR-C-250-050-0300	21
	315	SPR-C-315-050-0300	21
SPR-C-MR-BK-250-200-93	250	SPR-C-200-050-0300	93
	200	SPR-C-250-050-0300	93
SPR-C-MR-BK-250-31	250	SPR-C-250-060-0300BK	31
SPR-C-MR-BK-315-21	315	SPR-C-315-060-0300BK	21
SPR-C-MR-BK-315-250-21	315	SPR-C-250-060-0300BK	21
	250	SPR-C-315-060-0300BK	63

ALNOR® ventilation systems
is a registered trademark protected by a technical patent. All modification rights reserved.

SPIRAL ventilation ducts in box units

SPR-C-WB



Description

Spiral duct sets are available as wholesale units in standard nominal diameters. All sets are composed of 1 to 4 different duct nominal diameters in the same quantity. As a result, the units can be handled on and off transport vehicles with a forklift truck in just 30 minutes. The box units are made from fumigated wood to enable shipping by sea. Ventilation ducts in boxes are fully protected from damage also during container transport.

Product code example
Product code: **SPR-C-WB**

type

Dimensions

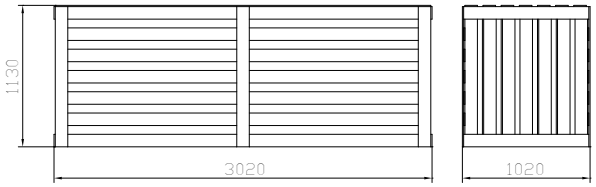

Product code	*SPR duct diameter (mm)*	*quantity (mb)*
SPR-C-080	80	432
SPR-C-100	100	300
SPR-C-125	125	192
SPR-C-140	140	147
SPR-C-150	150	108
SPR-C-160	160	108
SPR-C-180	180	75
SPR-C-200	200	75
SPR-C-250	250	48
SPR-C-280	280	27

ALNOR® ventilation systems
is a registered trademark protected by a technical patent. All modification rights reserved.

SPIRAL duct boxes

WOOD-BOX



Description

The boxes are designed for shipping of SPIRAL round ducts and they can accommodate ducts in the nominal diameter range of 80 mm to 250 mm. If the box capacity needs to be maximized, ducts of three different nominal diameters can be boxed by placing smaller tubes into larger ones. The boxes are strong enough to allow stacking one on top of another or placing cardboard boxes with ventilation fittings on top of them. The box units are made from fumigated wood to enable shipping by sea.

Product code example
Product code: **WOOD-BOX**

type _____

Dimensions

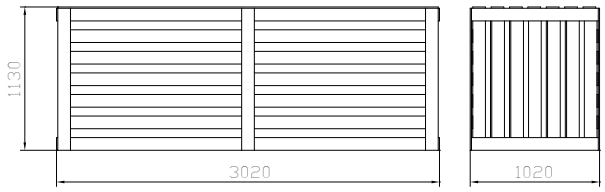

ALNOR® ventilation systems
is a registered trademark protected by a technical patent. All modification rights reserved.

SPIRAL duct racks

MOBIL-RACK

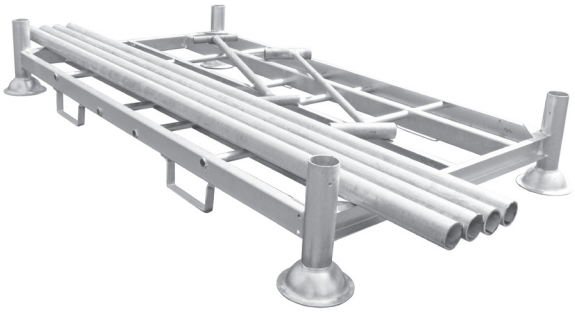

Description

The racks are designed for storage and shipping of SPIRAL round ducts. They can accommodate ducts in the nominal diameter range of 80 mm to 315 mm. If the box capacity needs to be maximized, ducts of max. 3 different nominal diameters can be boxed by placing smaller tubes into larger ones. An empty rack can be collapsed and stacked to save space in warehouses and on transport vehicles.

Product code example

Product code: **MOBIL-RACK**

type _____

Dimensions

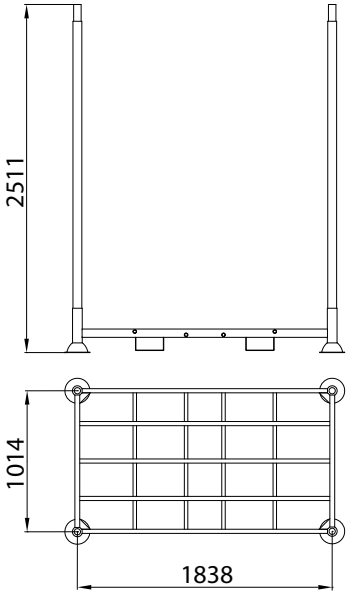

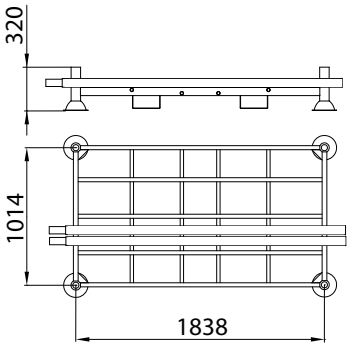

ALNOR® ventilation systems
is a registered trademark protected by a technical patent. All modification rights reserved.

Perforated ducts

SPRP

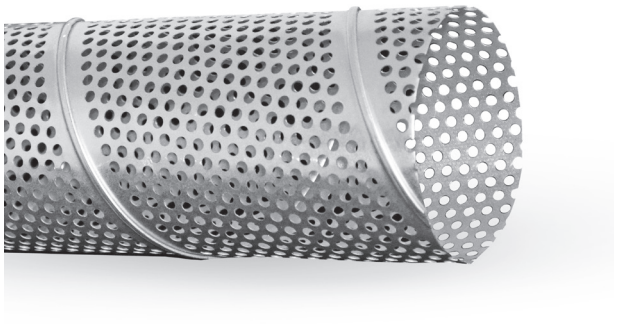

Description

Round spiral perforated ducts are available in diameters of DN 80 mm to 630 mm, and with outer corrugation of DN 250 mm or greater to improve stiffness and vacuum strength. Perforation form, layout and size: RV 5x8 (round 5-mm holes spaced at 8 mm).
These ducts are designed for fabrication of ventilation silencer ducts and air supply diffusers.

Product code example

Product code: **SPRP - aaa - bbb**

type
material
$Ød_1$

Dimensions

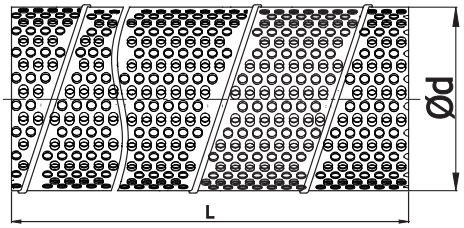

$Ød_{nom}$ (mm)	πd (m)	$\frac{\pi d^2}{4}$ (m^2)
80	0.251	0.005
100	0.314	0.008
125	0.393	0.012
140	0.440	0.015
150	0.471	0.018
160	0.502	0.020
180	0.565	0.025
200	0.628	0.031
224	0.703	0.039
250	0.785	0.049
280	0.879	0.062
300	0.942	0.071
315	0.989	0.078
355	1.115	0.099
400	1.256	0.126
450	1.413	0.159
500	1.570	0.196
560	1.758	0.246
600	1.884	0.283
630	1.978	0.312

ALNOR® ventilation systems
is a registered trademark protected by a technical patent. All modification rights reserved.

Plain seam-welded ducts

SRGL

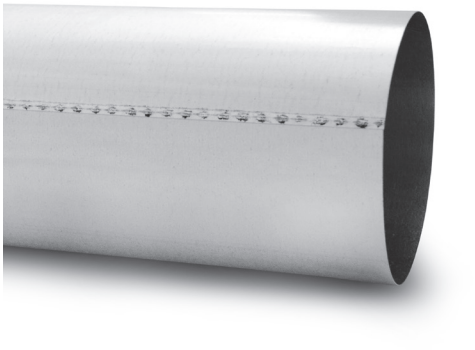

Description

SRGL plain seam-welded ducts are available in nominal diameters of Ø100 to 710 and in 1-m or 0.5-m long sections. The available sheet thickness ranges from 0.5 to 0.8 mm. The ducts meet requirements of air tightness class D according to EN 12237.

Available materials:
SRGL-… — galvanized steel sheet,
sheet thickness: 0.5 / 0.6 / 0.7 / 0.8 mm
SRGL-K-… — 1.4301/304 stainless steel sheet,
sheet thickness: 0.5 / 0.7 mm

Product code example
Product code: **SRGL - aaa - bbb - ccc**

type
Ød
thickness
length

Dimensions

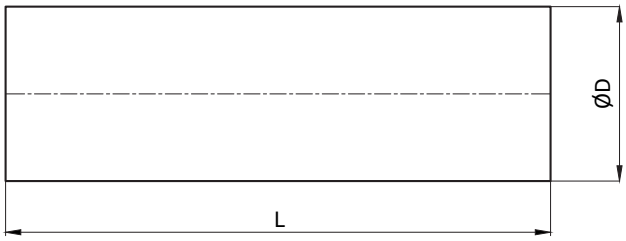

$Ød_{nom}$ (mm)	πd (m)	$\frac{\pi d^2}{4}$ (m^2)
80	0.251	0.005
100	0.314	0.008
125	0.393	0.012
140	0.440	0.015
150	0.471	0.018
160	0.502	0.020
180	0.565	0.025
200	0.628	0.031
224	0.703	0.039
250	0.785	0.049
280	0.879	0.062
300	0.942	0.071
315	0.989	0.078
355	1.115	0.099
400	1.256	0.126
450	1.413	0.159
500	1.570	0.196
560	1.758	0.246
600	1.884	0.283
630	1.978	0.312
710	2.229	0.396

ALNOR® ventilation systems
is a registered trademark protected by a technical patent. All modification rights reserved.

Plain butt-welded ducts

SRGW

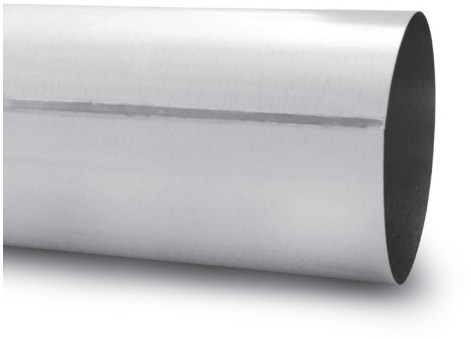

Description

SRGW plain butt-welded ducts are available in nominal diameters of Ø100 to 710 and in 0.5 to 1 m long sections. The available sheet thickness ranges from 0.5 to 0.9 mm. Butt welds provide optimum air tightness, high strength, and a neat finish. The ducts meet requirements of air tightness class D according to EN 12237.

Available materials:

SRGW-… - galvanized steel sheet,
sheet thickness: 0.5 / 0.6 / 0.7 / 0.8 / 0.9 mm
SRGW-K-… - 1.4301/304 stainless steel sheet,
sheet thickness: 0.5 / 0.7 mm
SGRW-A-… - aluminium sheet,
sheet thickness: 0.6 / 0.8 mm

Product code example

Product code: **SRGW - aaa - bbb - ccc**

type
Ød
thickness
length

Dimensions

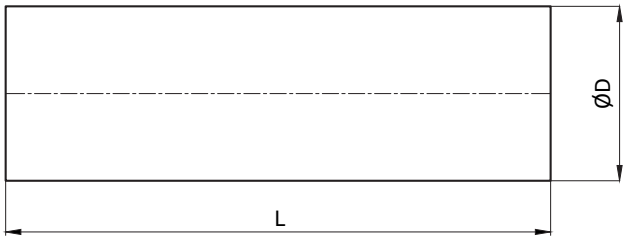

$Ød_{nom}$ (mm)	πd (m)	$\frac{\pi d^2}{4}$ (m^2)
80	0.251	0.005
100	0.314	0.008
125	0.393	0.012
140	0.440	0.015
150	0.471	0.018
160	0.502	0.020
180	0.565	0.025
200	0.628	0.031
224	0.703	0.039
250	0.785	0.049
280	0.879	0.062
300	0.942	0.071
315	0.989	0.078
355	1.115	0.099
400	1.256	0.126
450	1.413	0.159
500	1.570	0.196
560	1.758	0.246
600	1.884	0.283
630	1.978	0.312
710	2.229	0.396

ALNOR® ventilation systems
is a registered trademark protected by a technical patent. All modification rights reserved.

Pressed bends with gaskets

BPL-90



Description

Pressed bends are designed for building ventilation systems based on spiral and plain ducts. Seam welds provide air tightness class D without the need to use any other sealants. In ventilation and heat recuperation systems, the double EPDM gasket provides air tightness class D according to EN 12237. The piece is connected with a duct by inserting one into the other. The pressed form of the ventilation piece helps to reduce the flow resistance and the pressure loss.



There is also available version with a female end - **BPFL** code
or with two female ends - **BPFF** code.

Available materials - Product code example
BPL-90-... - galvanized steel sheet

Product code example
Product code: **BPL - aaa - 90**

type
Ød$_1$
angle

Dimensions

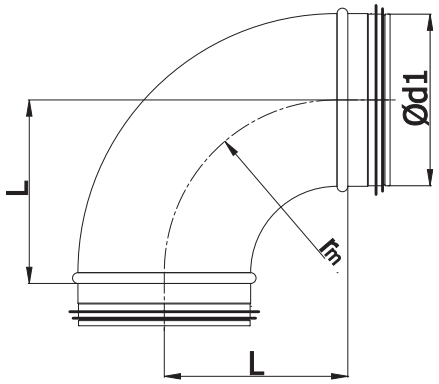

$r_m \approx 1 \times d_1$

Ød$_{1\ nom}$ (mm)	*L (mm)*	*Weight (kg)*
80	100	0.3
100	100	0.4
125	125	0.6
140	135	0.8
150	150	0.9
160	160	1.0
180	175	1.2
200	200	1.5
250	250	2.4

ALNOR® ventilation systems
is a registered trademark protected by a technical patent. All modification rights reserved.

Pressed bends

BP-90



Description

Pressed bends are designed for building ventilation systems based on spiral and plain ducts. Seam welds improve the air tightness of the ventilation system, while the hemmed rim helps to avoid cutting injuries during handling and installation. The piece is connected with a duct by inserting one into the other. The pressed form of the ventilation piece helps to reduce the flow resistance and the pressure loss. Air tightness can be increased to class B by wrapping the joints with the TAL, MET or DUCT sealing tape.



There is also available version with a female end - **BPF** code
or with two female ends - **BPFF** code.

Available materials - Product code example
BP-90-... - galvanized steel sheet

Product code example
Product code: **BP - aaa - 90**

type
Ød$_1$
angle

Dimensions

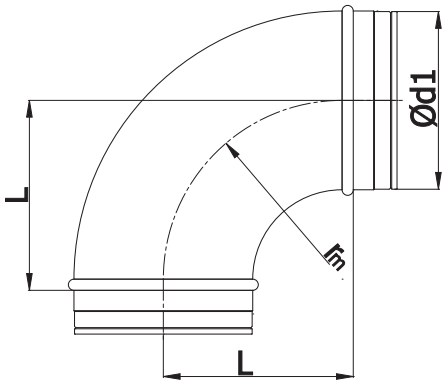

$r_m \approx 1 \times d_1$

Ød$_{1\ nom}$ (mm)	*L (mm)*	*Weight (kg)*
80	100	0.3
100	100	0.4
125	125	0.6
140	135	0.8
150	150	0.9
160	160	1.0
180	175	1.2
200	200	1.5
250	250	2.4

ALNOR® ventilation systems
is a registered trademark protected by a technical patent. All modification rights reserved.

Pressed bends with gaskets - stainless steel

BPL-K-90



Description

Pressed bends are designed for building ventilation systems based on SPIRAL ducts and plain ducts made from stainless steel sheet. Seam welds provide air tightness class C without the need to use any other sealants. The piece is connected with a duct by inserting one into the other. The pressed form of the ventilation piece helps to reduce the flow resistance and the pressure loss.
Steel grade: 1.4301



There is also available version with a female end - **BPFL-K** code
or with two female ends - **BPFF-K** code.

Available materials - Product code example
BPL-K-…-90 - 1.4301/304 stainless steel sheet

Product code example
Product code: **BPL-K- aaa - 90**

type
Ød$_1$
angle

Dimensions

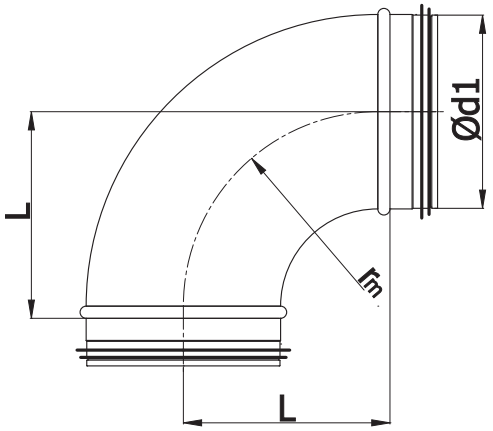

$r_m \approx 1 \times d_1$

Ød$_{1\ nom}$ (mm)	*L (mm)*	*Weight (kg)*
100	100	0.4
125	125	0.6
160	160	1.0
200	200	1.5

ALNOR® ventilation systems
is a registered trademark protected by a technical patent. All modification rights reserved.

Pressed bends - stainless steel

BP-K-90



Description

Pressed bends are designed for building ventilation systems based on SPIRAL ducts and plain ducts made from stainless steel sheet. Seam welds provide air tightness class C without the need to use any other sealants. The piece is connected with a duct by inserting one into the other. The pressed form of the ventilation piece helps to reduce the flow resistance and the pressure loss.
Steel grade: 1.4301



There is also available version with a female end - **BPF-K** code
or with two female ends - **BPFF-K** code.

Available materials - Product code example
BP-K-…-90-... - 1.4301/304 stainless steel sheet

Product code example
Product code: **BP-K - aaa - 90**

type
Ød$_1$
angle

Dimensions

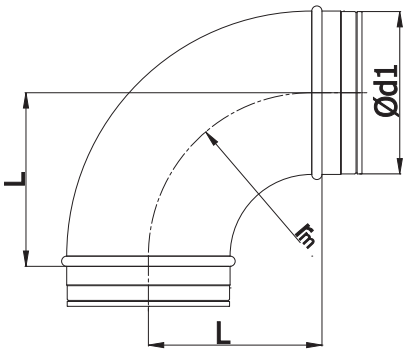

$r_m \approx 1 \times d_1$

Ød$_{1\ nom}$ (mm)	*L (mm)*	*Weight (kg)*
100	100	0.4
125	125	0.6
160	160	1.0
200	200	1.5

ALNOR® ventilation systems
is a registered trademark protected by a technical patent. All modification rights reserved.

Pressed bends with gaskets

BPDL-90



Description

Pressed bends are designed for building ventilation systems based on spiral and plain ducts. Seam welds provide air tightness class D without the need to use any other sealants. In ventilation and heat recuperation systems, the double EPDM gasket provides air tightness class D according to EN 12237. The piece is connected with a duct by inserting one into the other. The pressed form of the ventilation piece helps to reduce the flow resistance and the pressure loss.



There is also available version with a female end - **BPDFL** code
or with two female ends - **BPDFF** code.

Available materials - Product code example
BPDL-90-... - galvanized steel sheet

Product code example
Product code: **BPDL- aaa - 90**

type
Ød$_1$
angle

Dimensions

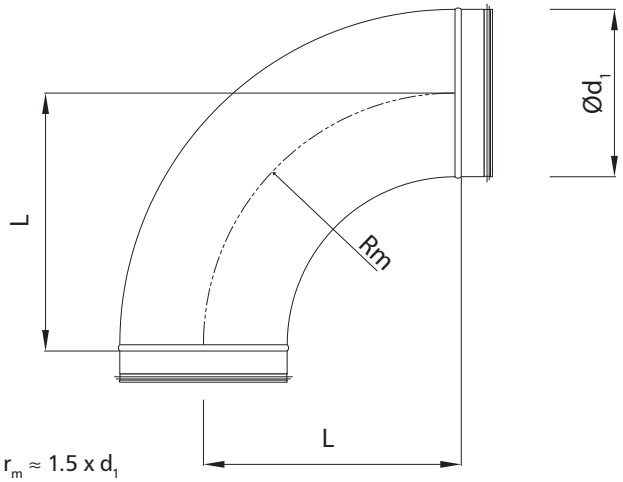

$r_m \approx 1.5 \times d_1$

Type (mm)	*Ød$_{1\ nom}$ (mm)*	*L (mm)*	*Weight (kg)*
BPDL-100-90	100	150	0.6
BPDL-125-90	125	190	0.8
BPDL-150-90	150	225	1.2
BPDL-200-90	200	300	2.1
BPDL-250-90	250	375	2.7

ALNOR® ventilation systems
is a registered trademark protected by a technical patent. All modification rights reserved.

Pressed bends

BPD-90



Description

Pressed bends are designed for building ventilation systems based on spiral and plain ducts. Seam welds provide air tightness class D without the need to use any other sealants. In ventilation and heat recuperation systems, the double EPDM gasket provides air tightness class D according to EN 12237. The piece is connected with a duct by inserting one into the other. The pressed form of the ventilation piece helps to reduce the flow resistance and the pressure loss.



There is also available version with a female end - **BPDF** code
or with two female ends - **BPDFF** code.

Available materials - Product code example
BPD-90-... - galvanized steel sheet

Product code example
Product code: **BPD - aaa - 90**

type
Ød$_1$
angle

Dimensions

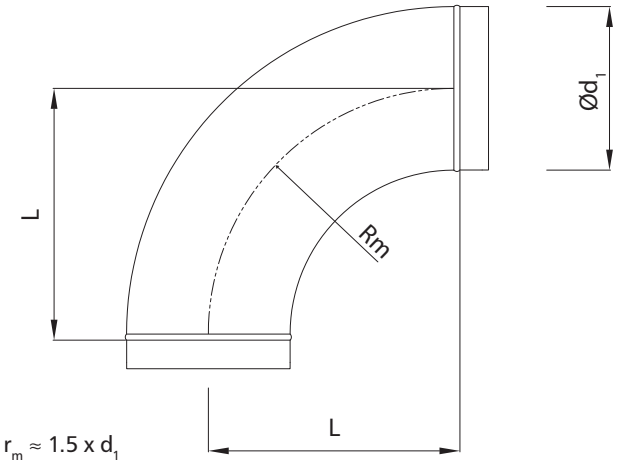

$r_m \approx 1.5 \times d_1$

Type (mm)	*Ød$_{1\ nom}$ (mm)*	*L (mm)*	*Weight (kg)*
BPD-100-90	100	150	0.6
BPD-125-90	125	190	0.8
BPD-150-90	150	225	1.2
BPD-200-90	200	300	2.1
BPD-250-90	250	375	2.7

ALNOR® ventilation systems
is a registered trademark protected by a technical patent. All modification rights reserved.

Short bends with gaskets and short female bends

BPKL-90/BPKFL-90



Description

Short pressed bends are designed for building ventilation systems based on SPIRAL ducts and plain ducts. Seam welds provide air tightness class D without the need to use any other sealants. In ventilation and heat recuperation systems, the double EPDM gasket provides air tightness class D according to EN 12237. The piece is connected with a duct by inserting one into the other. The short bending radius helps installing the ductwork under a suspended ceiling with a limited clearance. BPKFLT bends feature a female joint for direct connection to the mounting frames of various air valves (e.g. KN-RM or KWO-RML).



There is also available version with a female end - **BPKFL** code
or with two female ends - **BPKFF** code.

Available materials - Product code example
BPKL-... -90 - galvanized steel sheet

Product code example
Product code: **BPKL - aaa - 90**

type
Ød$_1$
angle

Dimensions

BPKL

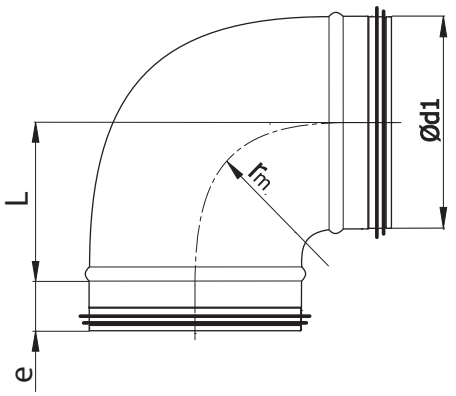

$r_m \approx 0.6 \times d_1$

BPKFL

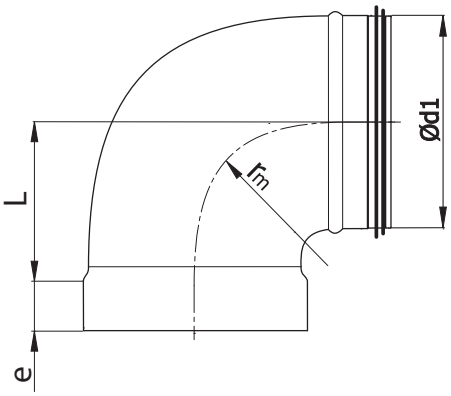

$r_m \approx 0.6 \times d_1$

Ød$_{1\ nom}$ (mm)	L (mm)	e (mm)	Weight (kg)
80	52	36	0.2
100	62	36	0.3
125	75	36	0.4
150	87	36	0.5
160	92	36	0.6
200	112	36	0.8

ALNOR® ventilation systems
is a registered trademark protected by a technical patent. All modification rights reserved.

Short male bends and short female bends

BPK-90/BPKF-90



Description

Short pressed bends are designed for building ventilation systems based on spiral and plain ducts. Seam welds improve the air tightness of the ventilation system, while the hemmed rim helps to avoid cutting injuries during handling and installation. The piece is connected with a duct by inserting one into the other. The short bending radius helps installing the ductwork under a suspended ceiling with a limited clearance. BPKFT bends feature a female joint for direct connection to the mounting frames of various air valves (e.g. KN-RM or KWO-RML).



There is also available version with a female end - **BPKF** code
or with two female ends - **BPKFF** code.

Available materials - Product code example
BPK-... -90 - galvanized steel sheet

Product code example
Product code: **BPK - aaa - 90**

type
Ød$_1$
angle

Dimensions

BPK

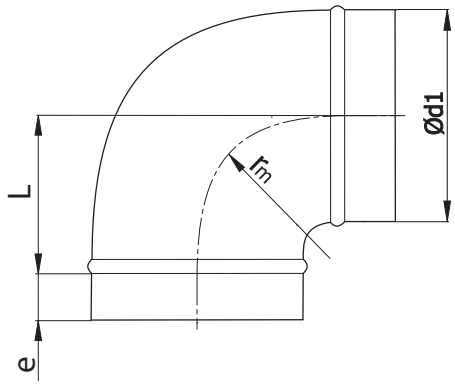

$r_m \approx 0.6 \times d_1$

BPKF

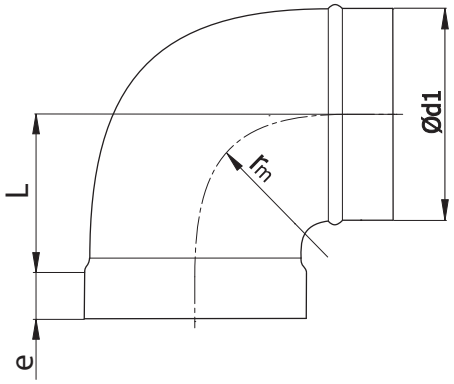

$r_m \approx 0.6 \times d_1$

Ød$_{1\ nom}$ (mm)	*L (mm)*	*e (mm)*	*Weight (kg)*
80	52	36	0.2
100	62	36	0.3
125	75	36	0.4
150	87	36	0.5
160	92	36	0.6
200	112	36	0.8

ALNOR® ventilation systems
is a registered trademark protected by a technical patent. All modification rights reserved.

Segmented bends with gaskets

BSL-90



Description

Segmented bend are designed for building ventilation systems based on SPIRAL ducts and plain ducts. They are made of 4 segments; bends in diameters of DN 1120 mm and greater are composed of 5 segments. The segments are fastened by hemming and seaming. The inside surface of the hemmed seams is sealed, and as a result of the double EPDM gaskets, this solution provides air tightness class D according to EN 12237 for ventilation and recuperation systems. The piece is connected with a duct by inserting one into the other. The pieces can be made of 1.4404 stainless steel sheet for ventilation systems in swimming pools.



There is also available version with a female end - **BSFL** code
or with two female ends - **BSFF** code.

Available materials - Product code example

BSL-...	-90	- galvanized steel sheet
BSL-K-...	-90	- 1.4301/304 stainless steel sheet
BSL-K-...	-90-316L	- 1.4404/316L stainless steel sheet, molybdenum-enriched
BSL-A-...-90		- AW-1050A H24 aluminium sheet
BSL-CU-...-90		- M1E z4 copper sheet

Product code example

Product code: **BSL - aaa - 90**

type
Ød$_1$
angle

Dimensions

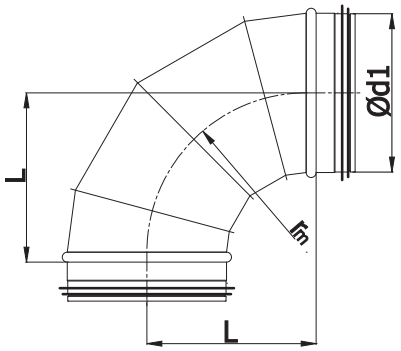

$r_m \approx 1 \times d_1$

Ød$_{1\ nom}$ (mm)	L (mm)	Weight (kg)
200	200	1.10
224	224	1.32
250	250	1.63
280	280	2.03
300	300	2.30
315	315	2.50
355	355	3.73
400	400	5.10
450	450	8.00
500	500	9.60
560	560	11.80
600	600	13.30
630	630	14.50
710	710	22.40
800	800	28.00
900	900	34.60
1000	1000	43.00
1120	1120	59.80
1250	1250	73.00
1400	1400	90.00
1500	1500	103.40
1600	1600	116.60

Volumetric flow rate q

ALNOR® ventilation systems
is a registered trademark protected by a technical patent. All modification rights reserved.

Segmented bends

BS-90



Description

Segmented bends are designed for building ventilation systems based on spiral and plain ducts. They are made of 4 segments; bends in diameters of DN 1120 mm and greater are composed of 5 segments. The segments are fastened by hemming and seaming. Bend sizes of 1.5D or 2D are available by adding segments to reduce the pressure loss and the flow resistance along the ventilation system. The piece is connected with a duct by inserting one into the other. The pieces can be made of 1.4404 stainless steel sheet for ventilation systems in swimming pools.



There is also available version with a female end - **BSF** code
or with two female ends - **BSFF** code.

Available materials - Product code example

BS-...-90	- galvanized steel sheet
BS-K-…-90	- 1.4301/304 stainless steel sheet
BS-K-... -90-316L	- 1.4404/316L stainless steel sheet,molybdenum-enriched
BS-A-... -90	- AW-1050A H24 aluminium sheet
BS-CU-...-90	- M1E z4 copper sheet

Product code example

Product code: **BS - aaa - 90**

type
Ød$_1$
angle

Dimensions

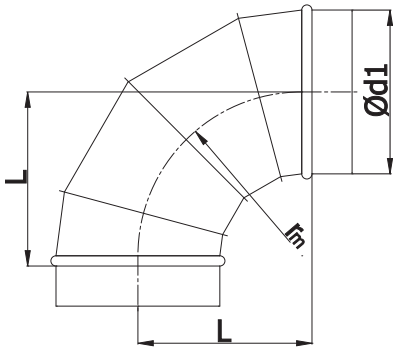

$r_m \approx 1 \times d_1$

Ød$_{1\ nom}$ (mm)	L (mm)	Weight (kg)
200	200	1.10
224	224	1.32
250	250	1.63
280	280	2.03
300	300	2.30
315	315	2.50
355	355	3.73
400	400	5.10
450	450	8.00
500	500	9.60
560	560	11.80
600	600	13.30
630	630	14.50
710	710	22.40
800	800	28.00
900	900	34.60
1000	1000	43.00
1120	1120	59.80
1250	1250	73.00
1400	1400	90.00
1500	1500	103.40
1600	1600	116.60

ALNOR® ventilation systems
is a registered trademark protected by a technical patent. All modification rights reserved.

Short segmented bends with gaskets

BSKL-90



Dimensions

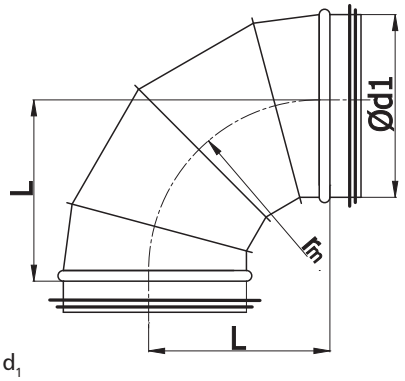

$r_m \approx 0.6 \times d_1$

$Ød_{1\ nom}$ (mm)	L (mm)	Weight (kg)
200	160	0.70
224	170	0.80
250	175	1.10
280	215	1.40
300	200	1.60
315	240	1.70
355	230	2.10
400	280	2.60
450	315	3.80
500	340	4.60
560	355	5.70
600	360	7.50
630	410	8.20
710	425	10.30
800	480	12.80
900	540	20.40
1000	600	24.90
1120	670	31.80
1250	750	38.90
1400	840	53.60
1500	900	62.20
1600	960	70.10

Description

Segmented bends are designed for spiral ducts. They are made of 4 segments; the bends in diameters of DN 1120 mm and greater are made of 5 segments. The segments are fastened by hemming and seaming. The inside surface of the hemmed seams is sealed, and as a result of the double EPDM gaskets, this solution provides air tightness class D according to EN 12237 for ventilation and heat recuperation systems. The bending radius is ca. 0.6D, which helps installing the ductwork under a suspended ceiling with a limited clearance and reduces the segment bend pricing.
BSKFL-90 bends with a single female end are available on request.



There is also available version with a female end - **BSKFL** code
or with two female ends - **BSKFF** code.

Available materials - Product code example

BSKL-... -90 - galvanized steel sheet
BSKL-K-... -90 - 1.4301/304 stainless steel sheet
BSKL-K-... -90-316L - 1.4404/316L stainless steel sheet, molybdenum-enriched
BSKL-A-... -90 - AW-1050A H24 aluminium sheet
BSKL-CU-... -90 - M1E z4 copper sheet

Product code example

Product code: **BSKL - aaa - 90**

type
$Ød_1$
angle

ALNOR® ventilation systems
is a registered trademark protected by a technical patent. All modification rights reserved.

Segmented bends

BSK-90

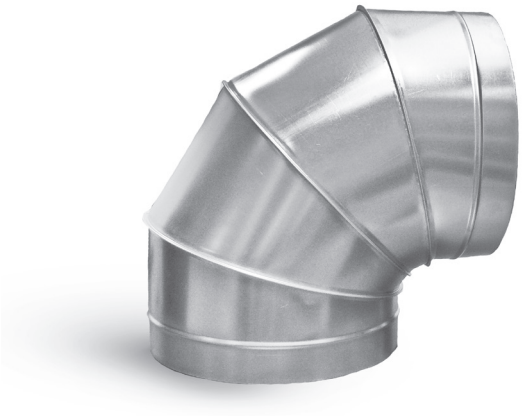

Description

Segmented bends are designed for SPIRAL ducts and plain ducts. They are made of 4 segments; the bends in diameters of DN 1120 mm and greater are made of 5 segments. The segments are fastened by hemming and seaming. Bend sizes of 1.5D or 2D are available by adding segments to reduce the pressure loss and the flow resistance along the ventilation system. The piece is connected with a duct by inserting one into the other. The pieces can be made of 1.4404 stainless steel sheet for ventilation systems in swimming pools.



There is also available version with a female end - **BSKF** code
or with two female ends - **BSKFF** code

Available materials - Product code example

BSK-... -90 - galvanized steel sheet
BSK-K-... -90 - 1.4301/304 stainless steel sheet
BSK-K-... -90-316L - 1.4404/316L stainless steel sheet, molybdenum-enriched
BSK-A-... -90 - AW-1050A H24 aluminium sheet
BSK-CU-... -90 - M1E z4 copper sheet

Product code example

Product code: **BSK - aaa - 90**

type
Ød$_1$
angle

Dimensions

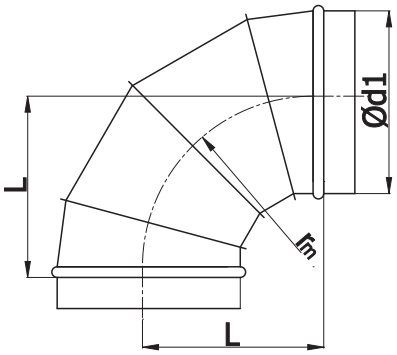

$r_m \approx 0.6 \times d_1$

Ød$_{1\ nom}$ (mm)	L (mm)	Weight (kg)
200	160	0.70
224	170	0.80
250	175	1.10
280	215	1.40
300	200	1.60
315	240	1.70
355	230	2.10
400	280	2.60
450	315	3.80
500	340	4.60
560	355	5.70
600	360	7.50
630	410	8.20
710	425	10.30
800	480	12.80
900	540	20.40
1000	600	24.90
1120	670	31.80
1250	750	38.90
1400	840	53.60
1500	900	62.20
1600	960	70.10

ALNOR® ventilation systems
is a registered trademark protected by a technical patent. All modification rights reserved.

Long segmented bends

BSDL-90/BSD-90



Description

Segmented bends are designed for spiral ducts. They are made of 5 segments; the bends in diameters of DN 1120 mm and greater are made of 6 segments. The segments are fastened by hemming and seaming. BSDL bends feature sealed inside surfaces of the hemmed seams and double EPDM gaskets to provide air tightness class D according to EN 12237 for ventilation and heat recuperation systems. The bending radius is ca. 1.5D to reduce the pressure loss and the flow resistance along the ventilation system. The bending radius can be increased to 3D or 4D on request to further improve the flow resistance.



There is also available version with a female end - **BSDFL** code
or with two female ends - **BSDFF** code

Available materials - Product code example

BSDL-... -90 - galvanized steel sheet
BSDL-K-... -90 - 1.4301/304 stainless steel sheet
BSDL-K-... -90-316L - 1.4404/316L stainless steel sheet, molybdenum-enriched
BSDL-A-... -90 - AW-1050A H24 aluminium sheet
BSDL-CU-... -90 - M1E z4 copper sheet

Product code example

Product code: **BSDL - aaa - 90**

type
Ød$_1$
angle

Dimensions

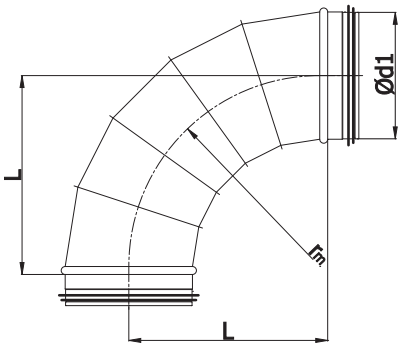

$r_m \approx 1.5 \times d_1$

Ød$_{1\ nom}$ (mm)	L (mm)	Weight (kg)
200	300	1.5
224	335	1.8
250	375	2.3
280	420	2.8
300	450	3.2
315	470	3.5
355	530	5.3
400	600	7.0
450	675	11.1
500	750	13.5
560	840	16.7
600	900	19.0
630	945	20.7
710	1065	31.7
800	1200	39.5
900	1350	49.2
1000	1500	60.9
1120	1680	84.9
1250	1875	104.3

ALNOR® ventilation systems
is a registered trademark protected by a technical patent. All modification rights reserved.

Technical specifications for 90° pressed and segmented bends

BPKL/BPL/BPDL/BSKL/BSL/BSDL

Technical specifications

Flow chart for BPKL-90/BPK-90/BPKFL-90/BPKF-90

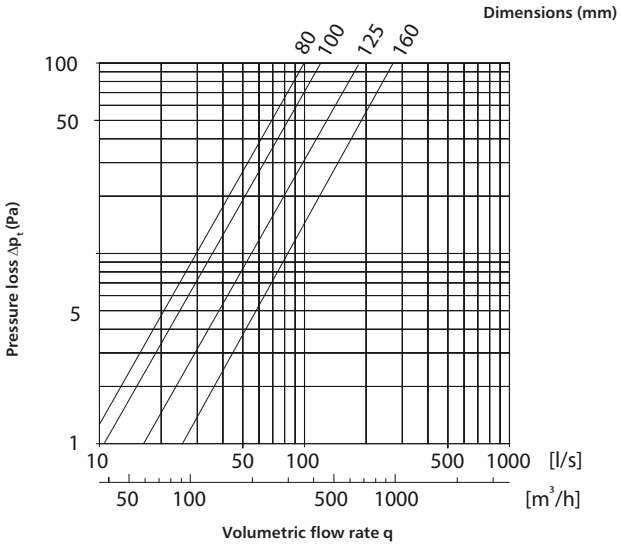

Flow chart for BSKL-90/BSK-90

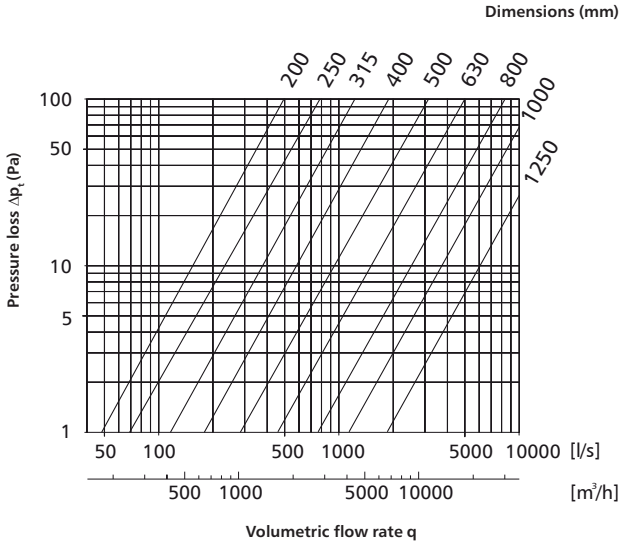

Flow chart for BPL-90/BP-90/BPL-K-90/BP-K-90

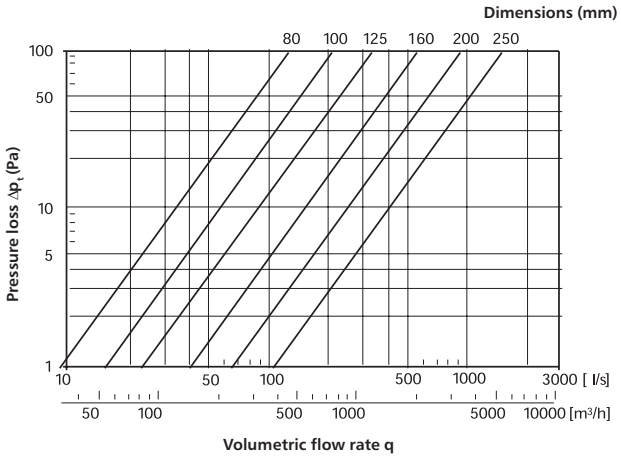

Flow chart for BSL-90/BS-90

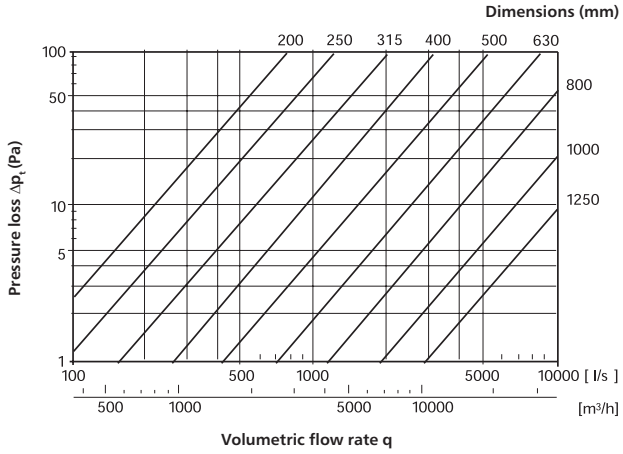

Flow chart for BPDL-90/BPD-90

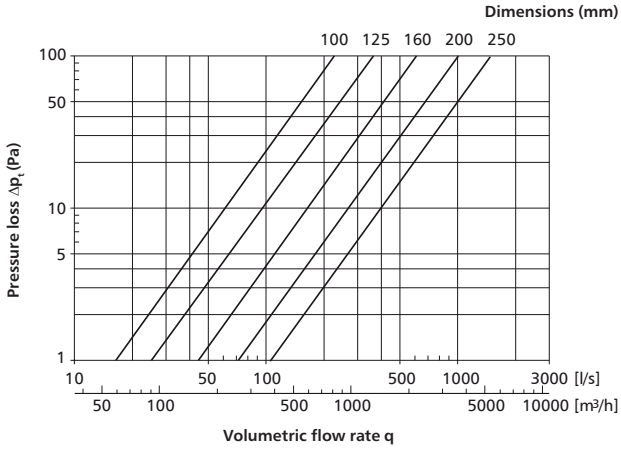

Flow chart for BSDL-90/BSD-90

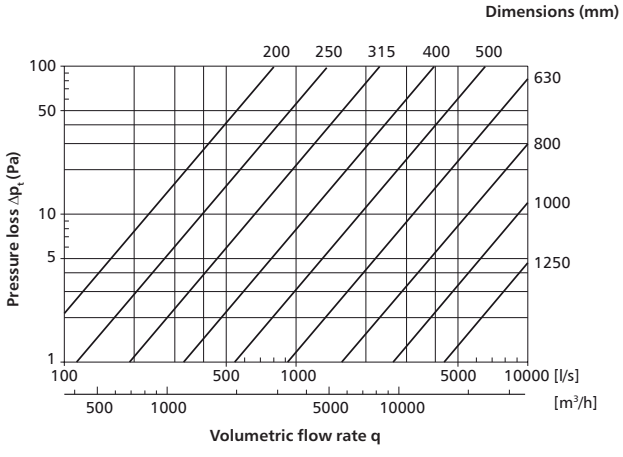

ALNOR® ventilation systems
is a registered trademark protected by a technical patent. All modification rights reserved.

Pressed bends

BPL-60/BP-60



Description

Pressed bends are designed for building ventilation systems based on SPIRAL ducts and plain ducts. Seam welds provide air tightness class D without the need to use any other sealants. The double EPDM gasket in the BPL version provides air tightness class D according to EN 12237 for ventilation and recuperation systems. The piece is connected with a duct by inserting one into the other. The pressed form of the ventilation piece helps to reduce the flow resistance and the pressure loss. Custom bending angles of the pressed bends are available on request.



There is also available version with a female end - **BPFL** code
or with two female ends - **BPFF** code

Available materials - Product code example
BPL-...-60 - galvanized steel sheet

Product code example
Product code: **BPL - aaa - 60**

type
Ød$_1$
angle

Dimensions

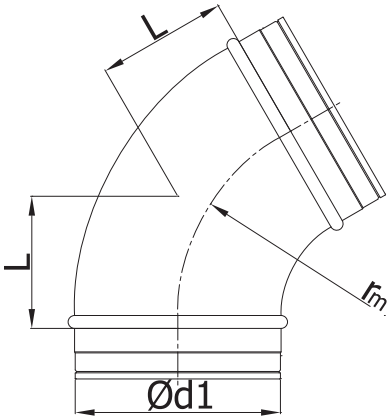

$r_m \approx 1 \times d_1$

Ød$_{1\ nom}$ (mm)	L (mm)	Weight (kg)
80	64	0.3
100	64	0.4
125	72	0.5
140	78	0.6
150	87	0.9
160	92	1.0
180	104	1.2
200	115	1.5
250	144	2.2

ALNOR® ventilation systems
is a registered trademark protected by a technical patent. All modification rights reserved.

Segmented bends

BSL-60/BS-60



Description

Segmented bends are designed for building ventilation systems based on spiral and plain ducts. BSL bends feature sealed inside surfaces of the hemmed seams and double EPDM gaskets to provide air tightness class D according to EN 12237 for ventilation and recuperation systems. The piece is connected with a duct by inserting one into the other. Bending angles from 5 to 85 degrees are available on request.



There is also available version with a female end - **BSFL** code
or with two female ends - **BSFF** code

Available materials - Product code example

BSL-...	-60	- galvanized steel sheet
BSL-K-...	-60	- 1.4301/304 stainless steel sheet
BSL-K-...	-60-316L	- 1.4404/316L stainless steel sheet, molybdenum-enriched
BSL-A-...	-60	- AW-1050A H24 aluminium sheet
BSL-CU-...	-60	- M1E z4 copper sheet

Product code example

Product code: **BSL - aaa - 60**

type
Ød$_1$
angle

Dimensions

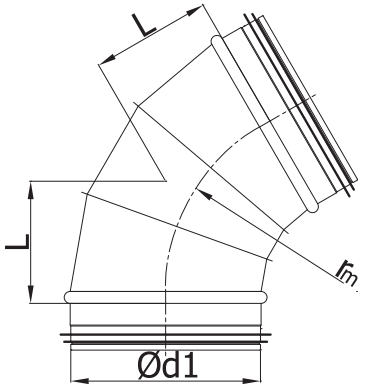

$r_m \approx 1 \times d_1$

Ød$_{1\ nom}$ (mm)	L (mm)	Weight (kg)
200	115	0.80
224	129	0.95
250	144	1.16
280	162	1.45
300	173	1.63
315	182	1.77
355	205	2.63
400	231	3.74
450	260	5.77
500	290	6.90
560	325	8.40
600	350	9.50
630	365	10.30
710	412	16.00
800	465	19.70
900	522	24.30
1000	580	30.20
1120	650	41.70
1250	725	51.30
1400	782	62.90
1500	865	71.50
1600	924	80.40

ALNOR® ventilation systems
is a registered trademark protected by a technical patent. All modification rights reserved.

Short segmented bends with gaskets

BSKL-60



Description

Segmented bends are designed for building ventilation systems based on SPIRAL ducts and plain ducts. The inside surface of the hemmed seams is sealed, and as a result of the double EPDM gaskets, this solution provides air tightness class D according to EN 12237 for ventilation and recuperation systems. The piece is connected with a duct by inserting one into the other. The bending radius has been reduced to 0.6D which helps installing the ductwork under a suspended ceiling with a limited clearance and reduces the segment bend pricing.



There is also available version with a female end - **BSKFL** code
or with two female ends - **BSKFF** code

Available materials - Product code example

BSKL-... -60	- galvanized steel sheet
BSKL-K-... -60	- 1.4301/304 stainless steel sheet
BSKL-K-... -60-316L	- 1.4404/316L stainless steel sheet, molybdenum-enriched
BSKL-A-... -60	- AW-1050A H24 aluminium sheet
BSKL-CU-...-60	- M1E z4 copper sheet

Product code example

Product code: **BSKL - aaa - 60**

type
Ød$_1$
angle

Dimensions

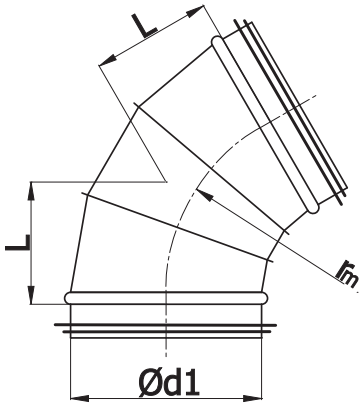

$r_m \approx 0.6 \times d_1$

Ød$_{1\ nom}$ (mm)	L (mm)	Weight (kg)
200	70	0.50
224	78	0.60
250	95	0.80
280	115	1.00
300	125	1.20
315	130	1.30
355	125	1.50
400	165	2.30
450	160	3.30
500	175	3.90
560	195	4.70
600	210	6.20
630	220	6.70
710	250	8.70
800	280	13.60
900	315	16.60
1000	350	20.70
1120	390	25.30
1250	435	31.20
1400	485	42.20
1500	520	47.60
1600	555	53.40

ALNOR® ventilation systems
is a registered trademark protected by a technical patent. All modification rights reserved.

Short segmented bends

BSK-60



Description

Segmented bends are designed for building ventilation systems based on spiral and plain ducts. The segments are fastened by hemming and seaming to form stable joints. The hemmed seams can be sealed from the inside on request. The piece is connected with a duct by inserting one into the other. The bending radius has been reduced to 0.6D which helps installing the ductwork under a suspended ceiling with a limited clearance and reduces the segment bend pricing.



There is also available version with a female end - **BSKF** code
or with two female ends - **BSKFF** code

Available materials - Product code example

BSK-... -60 - galvanized steel sheet
BSK-K-... -60 - 1.4301/304 stainless steel sheet
BSK-K-... -60-316L - 1.4404/316L stainless steel sheet, molybdenum-enriched
BSK-A-... -60 - AW-1050A H24 aluminium sheet
BSK-CU-... -60 - M1E z4 copper sheet

Product code example

Product code: **BSK - aaa - 60**

type
Ød$_1$
angle

Dimensions

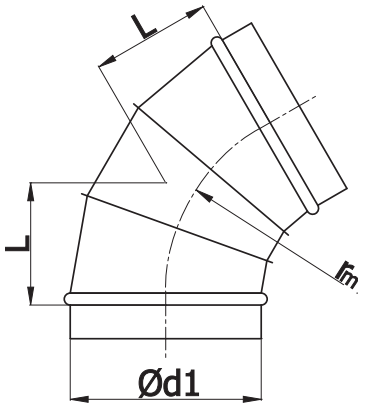

$r_m \approx 0.6 \times d_1$

Ød$_{1\ nom}$ (mm)	L (mm)	Weight (kg)
200	70	0.50
224	78	0.60
250	95	0.80
280	115	1.00
300	125	1.20
315	130	1.30
355	125	1.50
400	165	2.30
450	160	3.30
500	175	3.90
560	195	4.70
600	210	6.20
630	220	6.70
710	250	8.70
800	280	13.60
900	315	16.60
1000	350	20.70
1120	390	25.30
1250	435	31.20
1400	485	42.20
1500	520	47.60
1600	555	53.40

ALNOR® ventilation systems
is a registered trademark protected by a technical patent. All modification rights reserved.

BPL/BP/BSL/BS/

Technical specifications

Flow chart for BPL-60 / BP-60

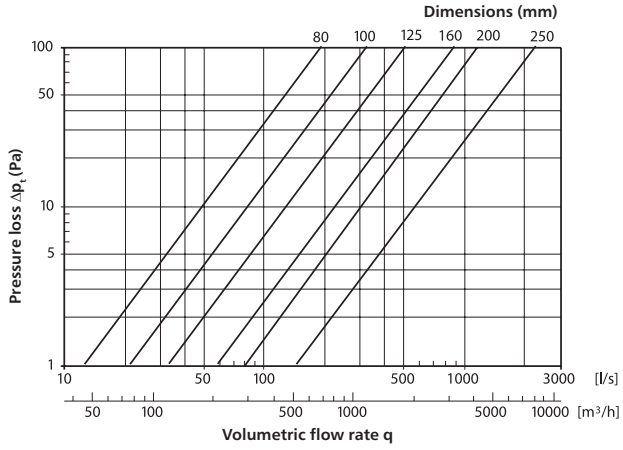

Flow chart for BPL-60 / BP-60

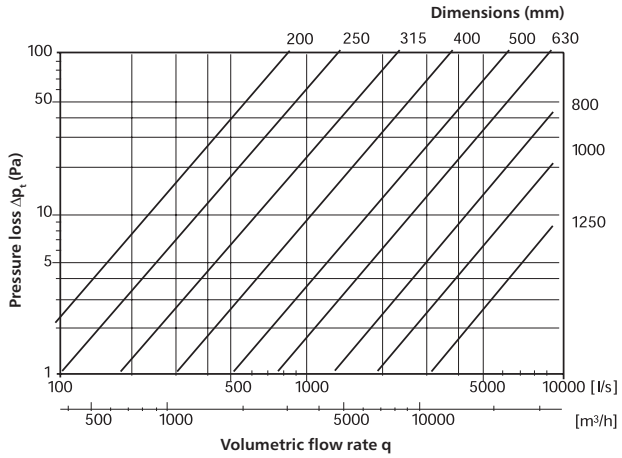

ALNOR® ventilation systems
is a registered trademark protected by a technical patent. All modification rights reserved.

Pressed bends with gaskets

BPL-45



Description

Pressed bends are designed for installation of SPIRAL ducts and plain ducts. Seam welds provide air tightness class D without the need to use any other sealants. In ventilation and heat recuperation systems, the double EPDM gasket provides air tightness class D according to EN 12237. The piece is connected with a duct by inserting one into the other. The pressed form of the ventilation piece helps to reduce the flow resistance and the pressure loss.



There is also available version with a female end - **BPFL** code
or with two female ends - **BPFF** code

Available materials - Product code example
BPL-...-45 - galvanized steel sheet

Product code example
Product code: **BPL - aaa - 45**

type
Ød$_1$
angle

Dimensions

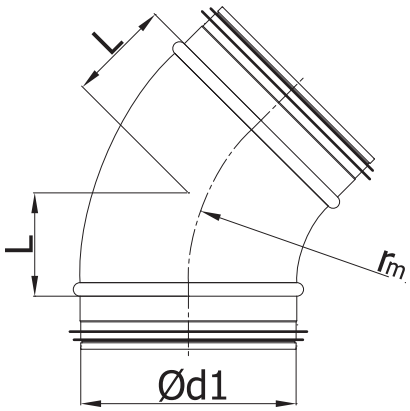

$r_m \approx 1 \times d_1$

Ød$_{1\ nom}$ (mm)	L (mm)	Weight (kg)
80	41	0.2
100	41	0.3
125	52	0.4
140	56	0.4
150	62	0.6
160	66	0.6
180	75	0.7
200	83	0.9
250	104	1.3

ALNOR® ventilation systems
is a registered trademark protected by a technical patent. All modification rights reserved.

Pressed bends

BP-45



Description

Pressed bends are designed for installation of SPIRAL ducts and plain ducts. Seam welds improve the air tightness of the ventilation system, while the hemmed rim helps to avoid cutting injuries during handling and installation. The piece is connected with a duct by inserting one into the other. The pressed form of the ventilation piece helps to reduce the flow resistance and the pressure loss.



There is also available version with a female end - **BPF** code
or with two female ends - **BPFF** code

Available materials - Product code example
BP-...-45 - galvanized steel sheet

Product code example
Product code: **BP - aaa - 45**

type
Ød$_1$
angle

Dimensions

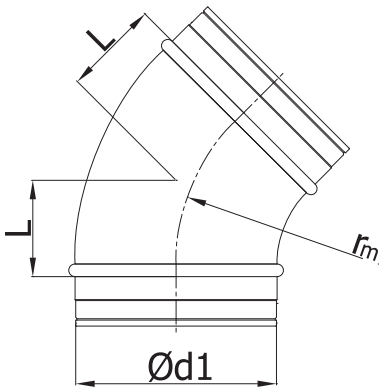

$r_m \approx 1 \times d_1$

Ød$_{1\ nom}$ (mm)	L (mm)	Weight (kg)
80	41	0.2
100	41	0.3
125	52	0.4
140	56	0.4
150	62	0.6
160	66	0.6
180	75	0.7
200	83	0.9
250	104	1.3

ALNOR® ventilation systems
is a registered trademark protected by a technical patent. All modification rights reserved.

Pressed bends with gaskets - stainless steel

BPL-K-45



Description

Pressed stainless bends are designed for installation of SPIRAL ducts and plain ducts. Seam welds provide air tightness class D without the need to use any other sealants. In ventilation and heat recuperation systems, the double EPDM gasket provides air tightness class D according to EN 12237. The piece is connected with a duct by inserting one into the other. The pressed form of the ventilation piece helps to reduce the flow resistance and the pressure loss.
Steel grade: 1.4301



There is also available version with a female end - **BPFL-K** code
or with two female ends - **BPFF-K** code

Available materials - Product code example
BPL-K-…-45 - 1.4301/304 stainless steel sheet

Product code example
Product code: **BPL-K - aaa - 45**

type
Ød$_1$
angle

Dimensions

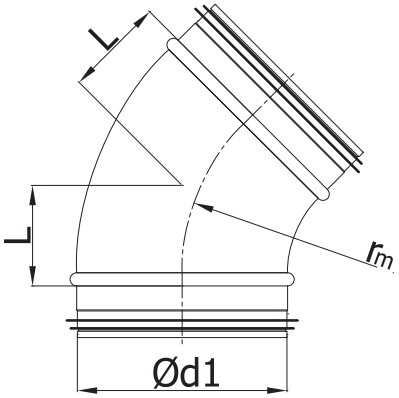

$r_m \approx 1 \times d_1$

Ød$_{1\ nom}$ (mm)	A (mm)	B (mm)	Weight (kg)
100	100	40	0.3
125	125	40	0.4
160	160	40	0.6
200	200	40	0.9

ALNOR® ventilation systems
is a registered trademark protected by a technical patent. All modification rights reserved.

Pressed bends - stainless steel

BP-K-45



Description

Pressed bends are designed for installation of SPIRAL ducts and plain ducts. Seam welds improve the air tightness of the ventilation system, while the hemmed rim helps to avoid cutting injuries during handling and installation. The piece is connected with a duct by inserting one into the other. The pressed form of the ventilation piece helps to reduce the flow resistance and the pressure loss.
Steel grade: 1.4301



There is also available version with a female end - **BPF-K** code
or with two female ends - **BPFF-K** code

Available materials - Product code example
BP-K-...-45 - 1.4301/304 stainless steel sheet

Product code example
Product code: **BP-K - aaa - 45**

type
Ød$_1$
angle

Dimensions

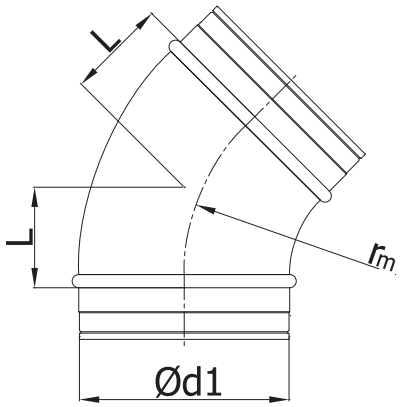

$r_m \approx 1 \times d_1$

Ød$_{1\ nom}$ (mm)	A (mm)	B (mm)	Weight (kg)
100	100	40	0.3
125	125	40	0.4
160	160	40	0.6
200	200	40	0.9

ALNOR® ventilation systems
is a registered trademark protected by a technical patent. All modification rights reserved.

Pressed bends with gaskets

BPDL-45



Description

Pressed bends are designed for building ventilation systems based on SPIRAL ducts and plain ducts. Seam welds provide air tightness class D without the need to use any other sealants. In ventilation and heat recuperation systems, the double EPDM gasket provides air tightness class D according to EN 12237. The piece is connected with a duct by inserting one into the other. The pressed form of the ventilation piece helps to reduce the flow resistance and the pressure loss.



There is also available version with a female end - **BPDFL** code
or with two female ends - **BPDFF** code

Available materials - Product code example
BPDL-45-... - galvanized steel sheet

Product code example
Product code: **BPDL- aaa - 45**

type
Ød$_1$
angle

Dimensions

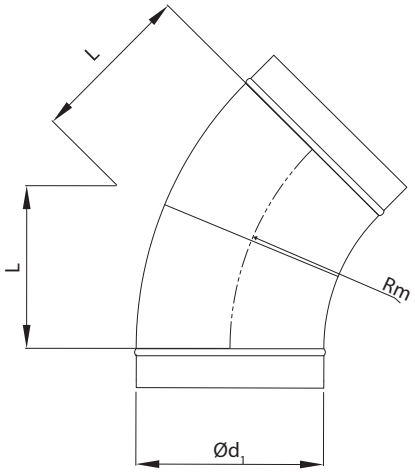

$r_m \approx 1.5 \times d_1$

Type (mm)	*Ød$_{1\ nom}$ (mm)*	*L (mm)*	*Weight (kg)*
BPDL-100-45	100	150	0.3
BPDL-125-45	125	190	0.4
BPDL-150-45	150	225	0.6
BPDL-200-45	200	300	0.9
BPDL-250-45	250	375	1.3

ALNOR® ventilation systems
is a registered trademark protected by a technical patent. All modification rights reserved.

Pressed bends

BPD-45



Description

Pressed bends are designed for building ventilation systems based on spiral ducts and plain ducts. Seam welds provide air tightness class D without the need to use any other sealants. In ventilation and heat recuperation systems, the double EPDM gasket provides air tightness class D according to EN 12237. The piece is connected with a duct by inserting one into the other. The pressed form of the ventilation piece helps to reduce the flow resistance and the pressure loss.



There is also available version with a female end - **BPDF** code
or with two female ends - **BPDFF** code

Available materials - Product code example
BPD-45-... - galvanized steel sheet

Product code example
Product code: **BPD - aaa - 45**

type
Ød$_1$
angle

Dimensions

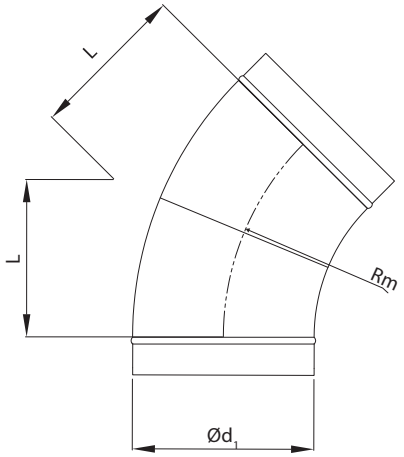

$r_m \approx 1.5 \times d_1$

Type (mm)	*Ød$_{1\ nom}$ (mm)*	*L (mm)*	*Weight (kg)*
BPD-100-45	100	150	0.2
BPD-125-45	125	190	0.3
BPD-150-45	150	225	0.6
BPD-200-45	200	300	0.9
BPD-250-45	250	375	1.3

ALNOR® ventilation systems
is a registered trademark protected by a technical patent. All modification rights reserved.

Short pressed male-to-female bends with gaskets

BPKL-45/BPKFL-45



Description

Short pressed bends are designed for building ventilation systems based on spiral ducts and plain ducts. Seam welds provide air tightness class D without the need to use any other sealants. In ventilation and heat recuperation systems, the double EPDM gasket provides air tightness class D according to EN 12237. The piece is connected with a duct by inserting one into the other. The short bending radius helps installing the ductwork under a suspended ceiling with a limited clearance. BPKFL bends feature a female end for direct connection to the mounting frames of various air valves (e.g. KW-S-RM or KNT-RML).



There is also available version with a female end - **BPKFL** code
or with two female ends - **BPKFF** code

Available materials - Product code example
BPKL-...-45 - galvanized steel sheet

Product code example
Product code: **BPKL - aaa - 45**

type
Ød$_1$
angle

Dimensions

BPKL

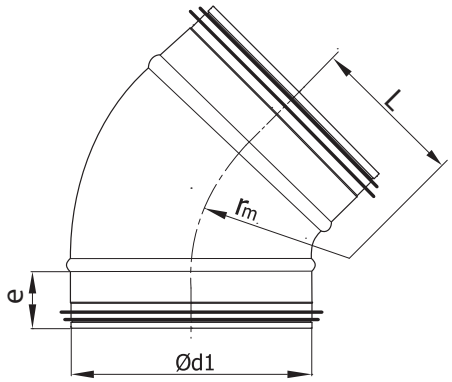

$r_m \approx 0.6 \times d_1$

BPKFL

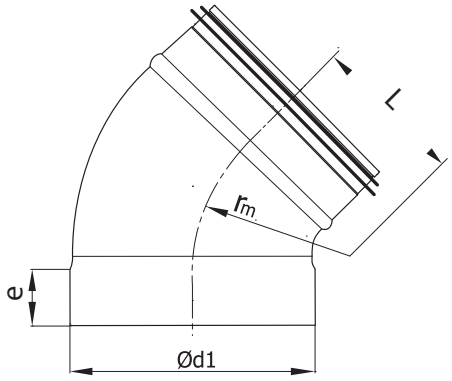

$r_m \approx 0.6 \times d_1$

Ød$_{1\ nom}$ (mm)	*L (mm)*	*e (mm)*	*Weight (kg)*
80	52	36	0.1
100	62	36	0.2
125	75	36	0.3
150	87	36	0.3
160	92	36	0.4
200	112	36	0.5

ALNOR® ventilation systems
is a registered trademark protected by a technical patent. All modification rights reserved.

Short pressed male-to-female bends

BPK-45/BPKF-45



Description

Short pressed bends are designed for building ventilation systems based on spiral ducts and plain ducts. Seam welds improve the air tightness of the ventilation system, while the hemmed rim helps to avoid cutting injuries during handling and installation. The piece is connected with a duct by inserting one into the other. The short bending radius helps installing the ductwork under a suspended ceiling with a limited clearance. BPKFL bends feature a female joint for direct connection to the mounting frames of various air valves (e.g. KN-RM or KWO-RML).



There is also available version with a female end - **BPKF** code
or with two female ends - **BPKFF** code

Available materials - Product code example
BPK-...-45 - galvanized steel sheet

Product code example
Product code: **BPK - aaa - 45**

type
Ød$_1$
angle

Dimensions

BPK

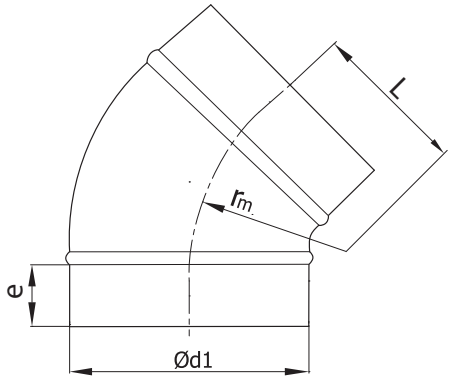

$r_m \approx 0.6 \times d_1$

BPKF

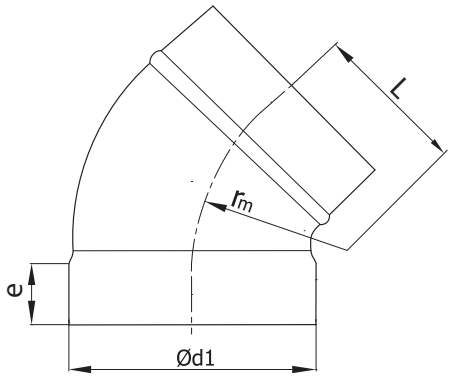

$r_m \approx 0.6 \times d_1$

Ød$_{1\ nom}$ (mm)	L (mm)	e (mm)	Weight (kg)
80	52	36	0.1
100	62	36	0.2
125	75	36	0.3
150	87	36	0.3
160	92	36	0.4
200	112	36	0.5

ALNOR® ventilation systems
is a registered trademark protected by a technical patent. All modification rights reserved.

Segmented bends with gaskets

BSL-45



Description

Segmented bends are designed for building ventilation systems based on spiral ducts and plain ducts. The inside surface of the hemmed seams is sealed, and as a result of the double EPDM gaskets, this solution provides air tightness class D according to EN 12237 for ventilation and heat recuperation systems. The piece is connected with a duct by inserting one into the other. The pieces can be made of 1.4301 stainless steel sheet for ventilation systems in swimming pools.



There is also available version with a female end - **BSFL** code
or with two female ends - **BSFF** code

Available materials - Product code example

BSL-... -45 - galvanized steel sheet
BSL-... -45-K - 1.4301/304 stainless steel sheet
BSL-... -45-K-316L - 1.4404/316L stainless steel sheet, molybdenum-enriched
BSL-... -45-ALU - AW-1050A H24 aluminium sheet
BSL-... -45-CU - M1E z4 copper sheet

Product code example

Product code: **BSL - aaa - 45**

type
Ød$_1$
angle

Dimensions

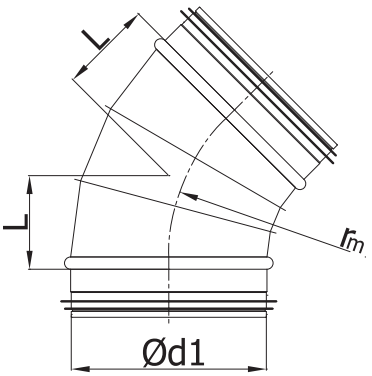

$r_m \approx 1 \times d_1$

Ød$_{1\ nom}$ (mm)	L (mm)	Weight (kg)
200	83	0.65
224	93	0.78
250	104	0.96
280	116	1.18
300	124	1.33
315	130	1.44
355	145	2.11
400	162	3.07
450	186	4.75
500	204	5.60
560	232	6.80
600	249	7.65
630	261	8.30
710	294	12.90
800	331	15.80
900	373	19.40
1000	414	24.00
1120	464	33.00
1250	518	40.00
1400	578	48.80
1500	621	55.60
1600	663	62.40

ALNOR® ventilation systems
is a registered trademark protected by a technical patent. All modification rights reserved.

Segmented bends without gaskets

BS-45



Description

Segmented bends are designed for building ventilation systems based on SPIRAL ducts and plain ducts. Bend sizes of 1.5D or 2D are available by adding segments to reduce the pressure loss and the flow resistance along the ventilation system. The piece is connected with a duct by inserting one into the other. The pieces can be made of 1.4301 stainless steel sheet for ventilation systems in swimming pools.



There is also available version with a female end - **BSF** code
or with two female ends - **BSFF** code

Available materials - Product code example

BS-... -45	- galvanized steel sheet
BS-K-.. -45	- 1.4301/304 stainless steel sheet
BS-K-.. -45-316L	- 1.4404/316L stainless steel sheet, molybdenum-enriched
BS-... -45-ALU	- AW-1050A H24 aluminium sheet
BS-... -45-CU	- M1E z4 copper sheet

Product code example

Product code: **BS - aaa - 45**

type
Ød$_1$
angle

Dimensions

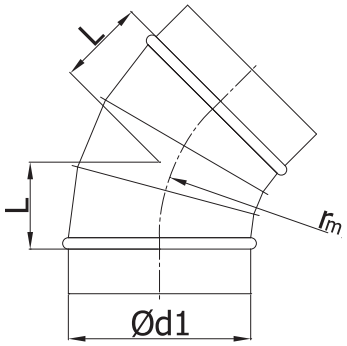

$r_m \approx 1 \times d_1$

Ød$_{1\ nom}$ (mm)	L (mm)	Weight (kg)
200	83	0.65
224	93	0.78
250	104	0.96
280	116	1.18
300	124	1.33
315	130	1.44
355	145	2.11
400	162	3.07
450	186	4.75
500	204	5.60
560	232	6.80
600	249	7.65
630	261	8.30
710	294	12.90
800	331	15.80
900	373	19.40
1000	414	24.00
1120	464	33.00
1250	518	40.00
1400	578	48.80
1500	621	55.60
1600	663	62.40

ALNOR® ventilation systems
is a registered trademark protected by a technical patent. All modification rights reserved.

Short segmented bends with gaskets

BSKL-45



Description

Segmented bends are designed for spiral ducts. The inside surface of the hemmed seams is sealed, and as a result of the double EPDM gaskets, this solution provides air tightness class D according to EN 12237 for ventilation and heat recuperation systems. The bending radius is ca. 0.6D, which helps installing the ductwork under a suspended ceiling with a limited clearance and reduces the segment bend pricing. Bends with a single female end are available on request.



There is also available version with a female end - **BSKFL** code
or with two female ends - **BSKFF** code

Available materials - Product code example

BSKL-... -45	- galvanized steel sheet
BSKL-K-... -45	- 1.4301/304 stainless steel sheet
BSKL-K-... -45-316L	- 1.4404/316L stainless steel sheet, molybdenum-enriched
BSKL-... -45-ALU	- AW-1050A H24 aluminium sheet
BSKL-... -45-CU	- M1E z4 copper sheet

Product code example

Product code: **BSKL - aaa - 45**

type
Ød$_1$
angle

Dimensions

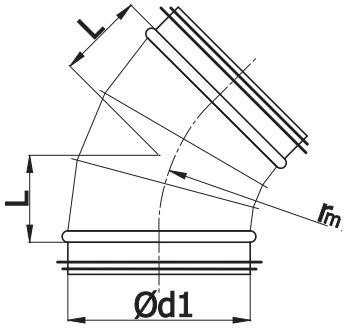

$r_m \approx 0.6 \times d_1$

Ød$_{1\ nom}$ (mm)	L (mm)	Weight (kg)
200	60	0.50
224	60	0.55
250	65	0.70
280	70	0.90
300	80	1.00
315	85	1.00
355	95	1.20
400	145	1.50
450	158	2.20
500	170	2.60
560	190	3.20
600	200	4.20
630	207	4.60
710	245	5.70
800	265	7.00
900	290	11.10
1000	330	13.40
1120	395	16.80
1250	430	20.40
1400	455	28.00
1500	480	31.70
1600	500	35.80

ALNOR® ventilation systems
is a registered trademark protected by a technical patent. All modification rights reserved.

Short segmented bends

BSK-45



Description

Segmented bends are designed for SPIRAL ducts and plain ducts. They are made of 4 segments; the bends in diameters of DN 1120 mm and greater are made of 5 segments. The segments are fastened by hemming and seaming. Bend sizes of 1.5D or 2D are available by adding segments to reduce the pressure loss and the flow resistance along the ventilation system. The piece is connected with a duct by inserting one into the other. The pieces can be made of 1.4301 stainless steel sheet for ventilation systems in swimming pools.



There is also available version with a female end - **BSKF** code
or with two female ends - **BSKFF** code.

Available materials - Product code example

BSK-... -45	- galvanized steel sheet
BSK-K-... -45	- 1.4301/304 stainless steel sheet
BSK-K-... -45-316L	- 1.4404/316L stainless steel sheet, molybdenum-enriched
BSK-A-... -45	- AW-1050A H24 aluminium sheet
BSK-CU-... -45	- M1E z4 copper sheet

Product code example

Product code: **BSK - aaa - 45**

type
Ød$_1$
angle

Dimensions

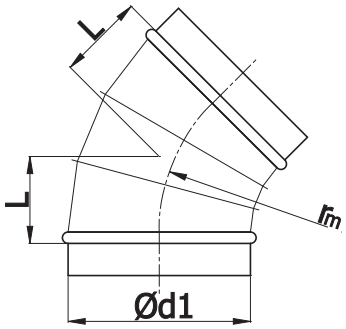

$r_m \approx 0.6 \times d_1$

Ød$_{1\ nom}$ (mm)	L (mm)	Weight (kg)
200	60	0.50
224	60	0.55
250	65	0.70
280	70	0.90
300	80	1.00
315	85	1.00
355	95	1.20
400	145	1.50
450	158	2.20
500	170	2.60
560	190	3.20
600	200	4.20
630	207	4.60
710	245	5.70
800	265	7.00
900	290	11.10
1000	330	13.40
1120	395	16.80
1250	430	20.40
1400	455	28.00
1500	480	31.70
1600	500	35.80

ALNOR® ventilation systems
is a registered trademark protected by a technical patent. All modification rights reserved.

Technical specifications for 45° pressed and segmented bends

BPL/BP/BPL-K/BP-K/BPDL/BPD/BSL/BS

Technical specifications

Flow chart for BPL-45 / BP-45

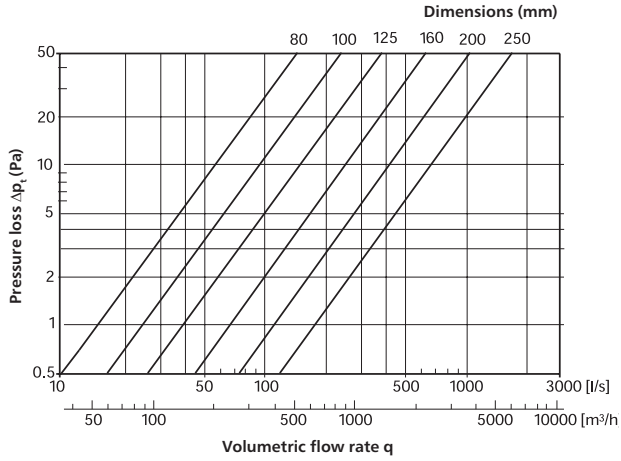

Flow chart for BPL-K-45 / BP-K-45

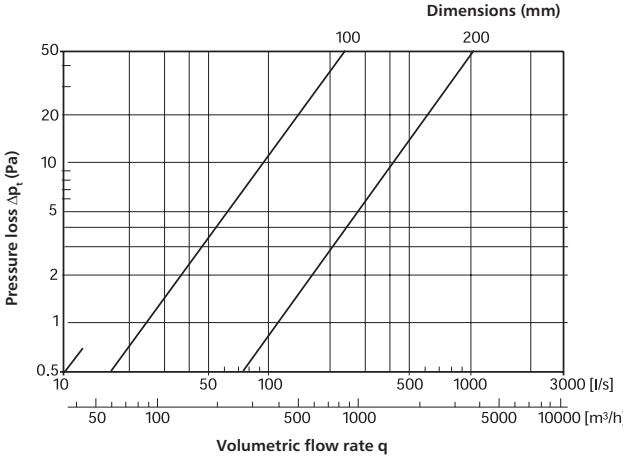

Flow chart for BPDL-45 / BPD-45

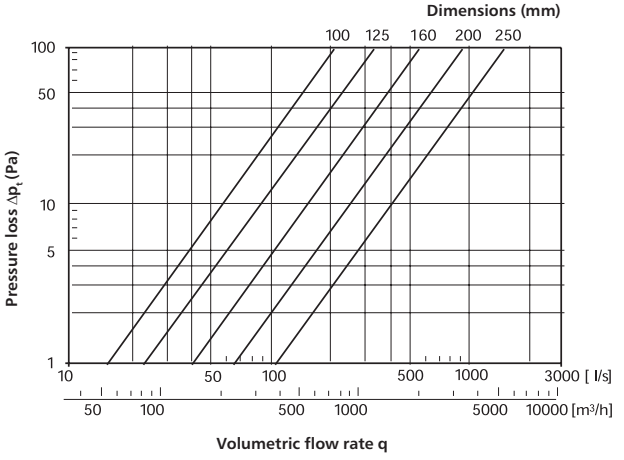

Flow chart for BSL-45 / BS-45

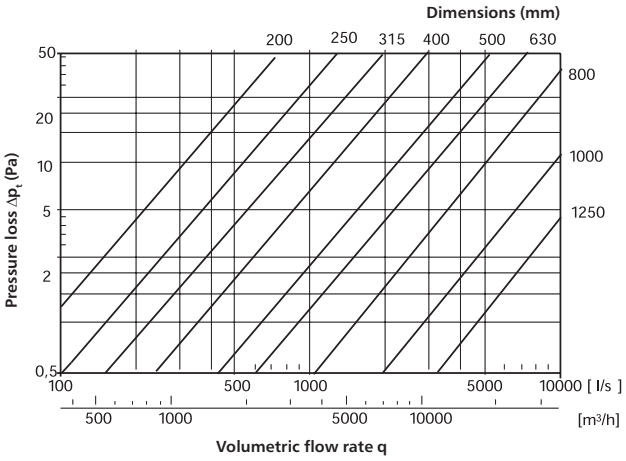

ALNOR® ventilation systems
is a registered trademark protected by a technical patent. All modification rights reserved.

Pressed bends

BPL-30/BP-30



Description

Pressed bends are designed for installation of spiral ducts and plain ducts. Seam welds provide air tightness class D without the need to use any other sealants. The double EPDM gasket in the BPL version provides air tightness class D according to EN 12237 for ventilation and recuperation systems. The piece is connected with a duct by inserting one into the other. The pressed form of the ventilation piece helps to reduce the flow resistance and the pressure loss. Custom bending angles of the pressed bends are available on request.



There is also available version with a female end - **BPFL** code
or with two female ends - **BPFF** code.

Available materials - Product code example
BPL-30-... – galvanized steel sheet

Product code example
Product code: **BPL - aaa - 30**

type
Ød$_1$
angle

Dimensions

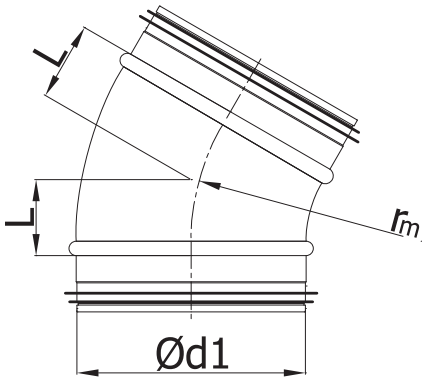

$r_m \approx 1 \times d_1$

Ød$_{1\ nom}$ (mm)	L (mm)	Weight (kg)
80	27	0.20
100	27	0.30
125	33	0.30
140	36	0.40
150	40	0.40
160	43	0.50
180	48	0.60
200	54	0.70
250	67	1.40

ALNOR® ventilation systems
is a registered trademark protected by a technical patent. All modification rights reserved.

Segmented bends

BSL-30/BS-30



Description

Segmented bends are designed for building ventilation systems based on SPIRAL ducts and plain ducts. BSL bends feature sealed inside surfaces of the hemmed seams and double EPDM gaskets to provide air tightness class D according to EN 12237 for ventilation and recuperation systems. The piece is connected with a duct by inserting one into the other. Bending angles from 5 to 85 degrees are available on request.



There is also available version with a female end - **BSFL** code
or with two female ends - **BSFF** code.

Available materials - Product code example

BSL-... -30	- galvanized steel sheet
BSL-K-... -30	- 1.4301/304 stainless steel sheet
BSL-K-... -30-316L	- 1.4404/316L stainless steel sheet, molybdenum-enriched
BSL-A-... -30	- AW-1050A H24 aluminium sheet
BSL-CU-... -30	- M1E z4 copper sheet

Product code example

Product code: **BSL - aaa- 30**

type
Ød$_1$
angle

Dimensions

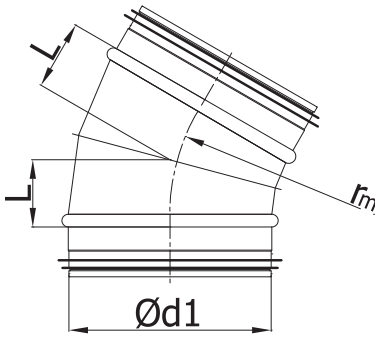

$r_m \approx 1 \times d_1$

Ød$_{1\ nom}$ (mm)	L (mm)	Weight (kg)
200	55	0.48
224	58	0.57
250	67	0.71
280	75	0.86
300	80	0.96
315	84	1.04
355	95	1.52
400	107	2.33
450	122	3.50
500	135	4.20
560	151	5.00
600	162	5.60
630	170	6.10
710	192	9.60
800	216	11.60
900	243	14.10
1000	270	17.70
1120	302	24.00
1250	338	28.90
1400	376	35.80
1500	402	40.30
1600	430	44.30

ALNOR® ventilation systems
is a registered trademark protected by a technical patent. All modification rights reserved.

Short bends with gaskets

BSKL-30



Description

Segmented bends are designed for building ventilation systems based on SPIRAL ducts made of galvanized steel sheet, stainless steel sheet or aluminium sheet. The inside surface of the hemmed seams is sealed, and as a result of the double EPDM gaskets, this solution provides air tightness class D according to EN 12237 for ventilation and recuperation systems. The piece is connected with a duct by inserting one into the other. The bending radius has been reduced to 0.6D which helps installing the ductwork under a suspended ceiling with a limited clearance and reduces the segmented bend pricing.



There is also available version with a female end - **BSF** code
or with two female ends - **BSFF** code.

Available materials - Product code example

BSKL-... -30	- galvanized steel sheet
BSKL-K-... -30	- 1.4301/304 stainless steel sheet
BSKL-K-... -30-316L	- 1.4404/316L stainless steel sheet, molybdenum-enriched
BSKL-A-... -30	- AW-1050A H24 aluminium sheet
BSKL-CU-... -30	- M1E z4 copper sheet

Product code example

Product code: **BSKL - aaa - 30**

type
Ød$_1$
angle

Dimensions

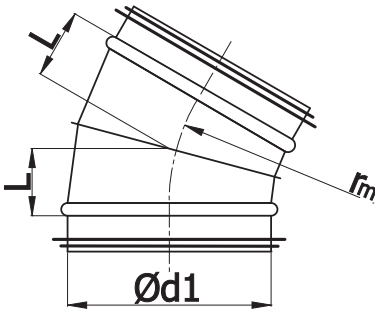

$r_m \approx 0.6 \times d_1$

Ød$_{1\ nom}$ (mm)	L (mm)	Weight (kg)
200	35	0.35
224	40	0.40
250	45	0.50
280	45	0.70
300	50	0.70
315	55	0.80
355	60	1.00
400	85	1.50
450	75	2.20
500	85	2.50
560	90	3.00
600	100	3.90
630	105	4.20
710	115	5.60
800	130	6.70
900	145	10.30
1000	165	12.90
1120	180	15.50
1250	205	20.60
1400	225	25.60
1500	245	28.60
1600	260	30.90

ALNOR® ventilation systems
is a registered trademark protected by a technical patent. All modification rights reserved.

Short bends

BSK-30

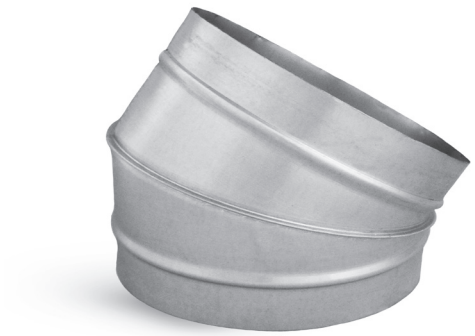

Description

Segmented bends without a gasket are designed for building ventilation systems based on spiral and plain ducts. The segments are fastened by hemming and seaming to form stable joints. The hemmed seams can be sealed from the inside on request. The piece is connected with a duct by inserting one into the other. The bending radius has been reduced to 0.6D which helps installing the ductwork under a suspended ceiling with a limited clearance and reduces the segment bend pricing.



There is also available version with a female end - **BSKF** code
or with two female ends - **BSKFF** code.

Available materials - Product code example

BSK-... -30	- galvanized steel sheet
BSK-K-... -30	- 1.4301/304 stainless steel sheet
BSK-K-... -30-316L	- 1.4404/316L stainless steel sheet, molybdenum-enriched
BSK-A-... -30	- AW-1050A H24 aluminium sheet
BSK-CU-... -30	- M1E z4 copper sheet

Product code example

Product code: **BSK - aaa- 30**

type
Ød$_1$
angle

Dimensions

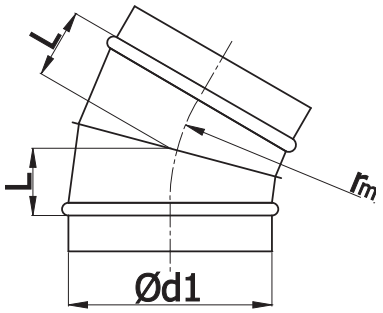

$r_m \approx 0.6 \times d_1$

Ød$_{1\ nom}$ (mm)	L (mm)	Weight (kg)
200	35	0.35
224	40	0.40
250	45	0.50
280	45	0.70
300	50	0.70
315	55	0.80
355	60	1.00
400	85	1.50
450	75	2.20
500	85	2.50
560	90	3.00
600	100	3.90
630	105	4.20
710	115	5.60
800	130	6.70
900	145	10.30
1000	165	12.90
1120	180	15.50
1250	205	20.60
1400	225	25.60
1500	245	28.60
1600	260	30.90

ALNOR® ventilation systems
is a registered trademark protected by a technical patent. All modification rights reserved.

Technical specifications for 30° pressed and segmented bends

BPL/BP/BSL/BS/

Technical specifications

Flow chart for BPL-30 / BP-30

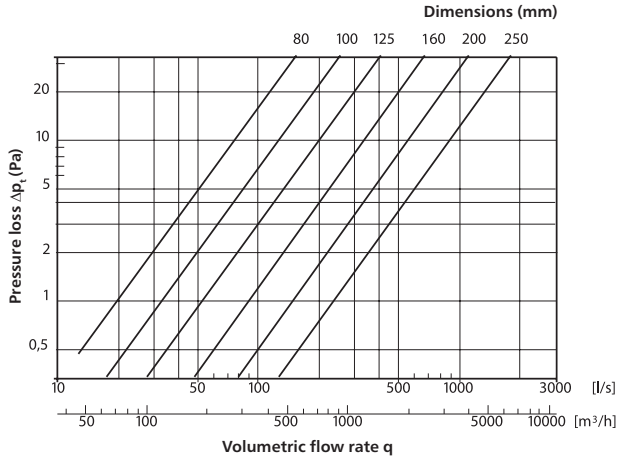

Flow chart for BSL-30 / BS-30

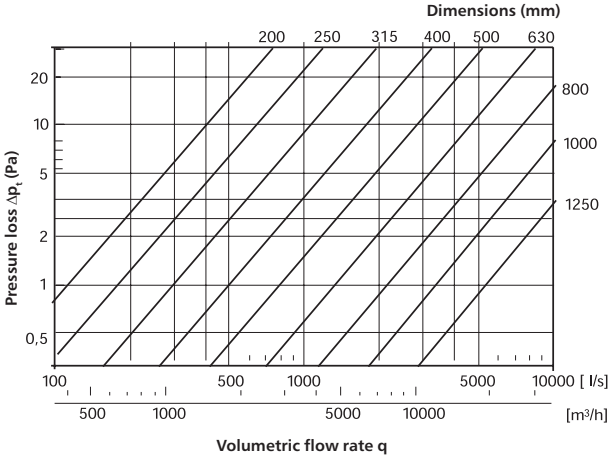

ALNOR® ventilation systems
is a registered trademark protected by a technical patent. All modification rights reserved.

Pressed bends

BPL-15/BP-15



Description

Pressed bends are designed for installation of spiral ducts and plain ducts. Seam welds provide air tightness class D without the need to use any other sealants. The double EPDM gasket in the BPL version provides air tightness class D according to EN 12237 for ventilation and recuperation systems. The piece is connected with a duct by inserting one into the other. The pressed form of the ventilation piece helps to reduce the flow resistance and the pressure loss. Custom bending angles of the pressed bends are available on request.



There is also available version with a female end - **BPFL** code
or with two female ends - **BPFF** code.

Available materials - Product code example
BPL-15-... - galvanized steel sheet

Product code example
Product code: **BPL - aaa - 15**

type
Ød$_1$
angle

Dimensions

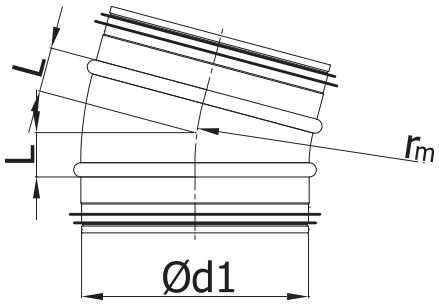

$r_m \approx 1 \times d_1$

Ød$_{1\ nom}$ (mm)	*L (mm)*	*Weight (kg)*
80	13	0.20
100	13	0.30
112	16	0.30
125	16	0.30
140	18	0.40
150	20	0.40
160	21	0.50
180	23	0.60
200	26	0.60

ALNOR® ventilation systems
is a registered trademark protected by a technical patent. All modification rights reserved.

Segmented bends

BSL-15/BS-15



Description

Segmented bends are designed for building ventilation systems based on SPIRAL ducts and plain ducts. BSL bends feature sealed inside surfaces of the hemmed seams and double EPDM gaskets to provide air tightness class D according to EN 12237 for ventilation and recuperation systems. The piece is connected with a duct by inserting one into the other. Bending angles from 5 to 85 degrees are available on request.



There is also available version with a female end - **BSFL** code
or with two female ends - **BSFF** code.

Available materials - Product code example

BSL-... -15	- galvanized steel sheet
BSL-K-... -15	- 1.4301/304 stainless steel sheet
BSL-K-... -15-316L	- 1.4404/316L stainless steel sheet, molybdenum-enriched
BSL-A-... -15	- AW-1050A H24 aluminium sheet
BSL-CU-... -15	- M1E z4 copper sheet

Product code example

Product code: **BSL - aaa- 15**

type
Ød$_1$
angle

Dimensions

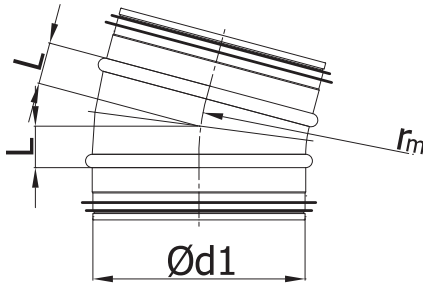

$r_m \approx 1 \times d_1$

Ød$_{1\ nom}$ (mm)	L (mm)	Weight (kg)
200	40	0.35
224	43	0.40
250	45	0.50
280	45	0.60
300	50	0.67
315	50	0.71
355	50	1.02
400	53	1.70
450	59	2.55
500	68	2.90
560	73	3.50
600	79	3.80
630	83	4.10
710	93	6.50
800	105	7.80
900	118	9.30
1000	132	11.60
1120	147	15.50
1250	165	18.40
1400	185	21.90
1500	198	24.40
1600	212	27.10

ALNOR® ventilation systems
is a registered trademark protected by a technical patent. All modification rights reserved.

Short segmented bends with gaskets

BSKL-15



Description

Segmented bends are designed for building ventilation systems based on SPIRAL ducts made of galvanized steel sheet, stainless steel sheet or aluminium sheet. The inside surface of the hemmed seams is sealed, and as a result of the double EPDM gaskets, this solution provides air tightness class D according to EN 12237 for ventilation and recuperation systems. The piece is connected with a duct by inserting one into the other. The bending radius has been reduced to 0.6D which helps installing the ductwork under a suspended ceiling with a limited clearance and reduces the segment bend pricing.



There is also available version with a female end - **BSKFL** code
or with two female ends - **BSFF** code.

Available materials - Product code example

BSKL-... -15	- galvanized steel sheet
BSKL-K-... -15	- 1.4301/304 stainless steel sheet
BSKL-K-... -15-316L	- 1.4404/316L stainless steel sheet, molybdenum-enriched
BSKL-A-... -15	- AW-1050A H24 aluminium sheet
BSKL-CU-... -15	- M1E z4 copper sheet

Product code example

Product code: **BSKL - aaa - 30**

type
Ød$_1$
angle

Dimensions

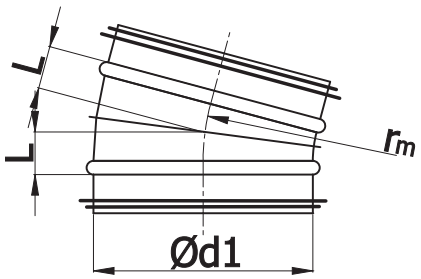

$r_m \approx 0.6 \times d_1$

Ød$_{1\ nom}$ (mm)	L (mm)	Weight (kg)
200	20	0.25
224	20	0.30
250	20	0.40
280	25	0.50
300	25	0.60
315	25	0.60
355	30	0.70
400	55	1.20
450	40	1.70
500	40	1.90
560	45	2.30
600	45	2.90
630	50	3.10
710	60	4.20
800	65	4.90
900	75	7.40
1000	80	9.20
1120	90	11.00
1250	100	12.80
1400	115	16.80
1500	120	18.60
1600	130	20.50

ALNOR® ventilation systems
is a registered trademark protected by a technical patent. All modification rights reserved.

Short bends

BSK-15



Description

Segmented bends without a gasket are designed for building ventilation systems based on spiral and plain ducts. The segments are fastened by hemming and seaming to form stable joints. The hemmed seams can be sealed from the inside on request. The piece is connected with a duct by inserting one into the other. The bending radius has been reduced to 0.6D which helps installing the ductwork under a suspended ceiling with a limited clearance and reduces the segment bend pricing.



There is also available version with a female end - **BSKF** code
or with two female ends - **BSFF** code.

Available materials - Product code example

BSK-... -15	- galvanized steel sheet
BSK-K-... -15	- 1.4301/304 stainless steel sheet
BSK-K-... -15-316L	- 1.4404/316L stainless steel sheet, molybdenum-enriched
BSK-A-... -15	- AW-1050A H24 aluminium sheet
BSK-CU-... -15	- M1E z4 copper sheet

Product code example

Product code: **BSK - aaa- 15**

type
Ød$_1$
angle

Dimensions

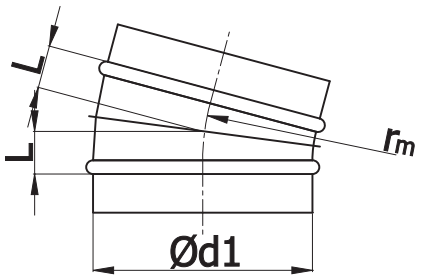

$r_m \approx 0.6 \times d_1$

Ød$_{1\ nom}$ (mm)	L (mm)	Weight (kg)
200	20	0.25
224	20	0.30
250	20	0.40
280	25	0.50
300	25	0.60
315	25	0.60
355	30	0.70
400	55	1.20
450	40	1.70
500	40	1.90
560	45	2.30
600	45	2.90
630	50	3.10
710	60	4.20
800	65	4.90
900	75	7.40
1000	80	9.20
1120	90	11.00
1250	100	12.80
1400	115	16.80
1500	120	18.60
1600	130	20.50

ALNOR® ventilation systems
is a registered trademark protected by a technical patent. All modification rights reserved.

Technical specifications for 15° pressed and segmented bends

BPL/BP/BSL/BS

Technical specifications

Flow chart for BPL-15 / BP-15

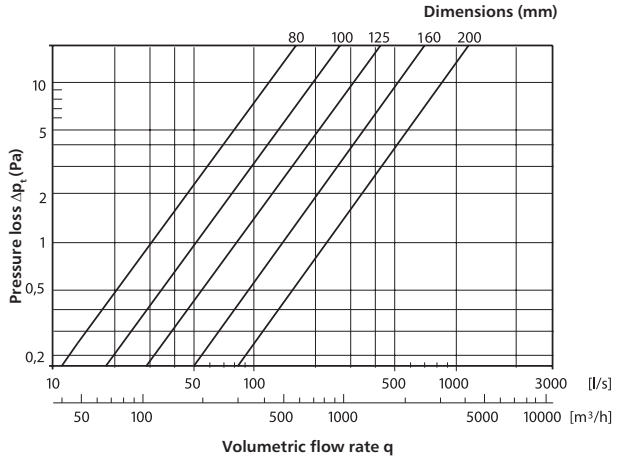

Flow chart for BSL-15 / BS-15

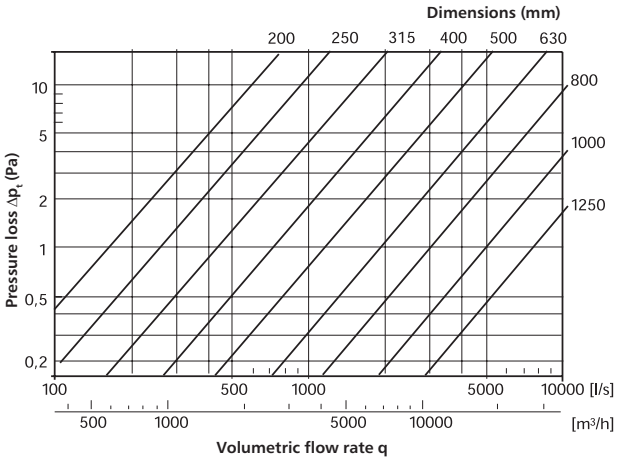

ALNOR® ventilation systems
is a registered trademark protected by a technical patent. All modification rights reserved.

Pressed reducer with gasket | male ends

RPCL



Description

The RPCL reducers have male ends which slip into spiral ducts or plain ducts. The ends feature double EPDM gaskets to ensure the highest class of air tightness. This reducer helps to save installation space, but it increases the flow resistance compared to RSCLL long reducers. Standard nominal diameters up to DN 315 mm are available for pressed pieces at a lower price and with an improved finish.

Available materials — Product code example
RPCL-...-... – galvanized steel sheet

Product code example
Product code: **RPCL - aaa - bbb**

type
Ød$_1$
Ød$_2$

Dimensions

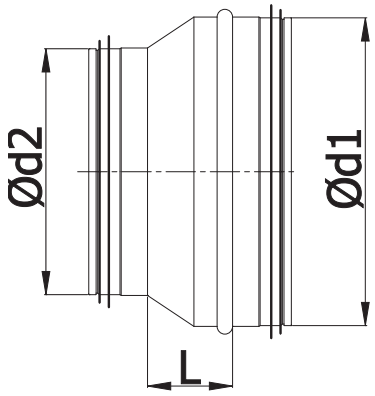

Ød$_{1\ nom}$ (mm)	Ød$_{2\ nom}$ (mm)	L (mm)	Weight (kg)
100	80	18	0.20
125	80	28	0.20
	100	22	0.20
140	100*	30	0.20
	125	30	0.20
150	100	35	0.20
	125	30	0.20
	140	30	0.20
160	80	48	0.30
	100	37	0.30
	125	26	0.20
	140	30	0.30
	150	30	0.30
	160	30	0.30
180	125*	40	0.30
	140*	30	0.30
	150*	30	0.30
	160	30	0.30
200	100	58	0.40
	125	46	0.40
	140*	40	0.30
	150	35	0.30
	160	26	0.30
	180	30	0.30
224	150*	50	0.40
	160*	50	0.40
	180*	30	0.40
	200	30	0.40

ALNOR® ventilation systems
is a registered trademark protected by a technical patent. All modification rights reserved.

Pressed reducer with gasket | male ends

RPCL

Dimensions

Ød$_{1\ nom}$ (mm)	Ød$_{2\ nom}$ (mm)	L (mm)	Weight (kg)
250	125	70	0.50
	150	60	0.50
	160	53	0.50
	180*	50	0.40
	200	31	0.60
	224*	50	0.50
280	160*	80	0.60
	180*	70	0.60
	200*	60	0.60
	224*	40	0.60
	250*	30	0.50
300	200*	70	0.70
	224*	60	0.70
	250*	30	0.60
	280*	30	0.70
315	160	88	0.80
	180*	90	0.80
	200	68	0.70
	224*	60	0.70
	250	43	0.70
	280*	40	0.70
	300*	38	0.70
355	200*	110	1.10
	224*	90	1.00
	250*	70	1.00
	315*	30	0.90
400	200*	140	1.50
	224*	120	1.40
	250*	100	1.30
	315*	60	1.30
	355*	30	1.20
450	250*	140	2.00
	280*	110	1.90
	300*	100	1.90
	315*	90	1.80
	355*	60	1.70
	400*	40	1.70
500	250*	128	2.20
	300*	140	2.40
	315*	120	2.20
	355*	100	2.20
	400*	70	2.10
	450*	40	2.10

Ød$_{1\ nom}$ (mm)	Ød$_{2\ nom}$ (mm)	L (mm)	Weight (kg)
560	315*	170	2.90
	355*	140	2.80
	400*	110	2.70
	450*	80	2.60
	500*	75	2.60
600	400*	130	3.10
	450*	100	3.00
	500*	70	2.70
	560*	30	2.40
630	315*	160	3.20
	400*	140	3.30
	450*	120	3.30
	500*	80	3.00
	560*	75	2.90
	600*	30	2.50

*Segmented versions; other versions are pressed only.

ALNOR® ventilation systems
is a registered trademark protected by a technical patent. All modification rights reserved.

Pressed tapered transformation piece | male ends
RPC



Description

The RPC tapered transformation pieces have male ends which slip into spiral ducts or plain ducts. The safe-edge ends have hemmed rims. This reducer helps to save installation space, but it increases the flow resistance compared to RSCL long reducers. Standard nominal diameters up to DN 315 mm are available for pressed pieces at a lower price and with an improved finish. The air tightness can be increased to class B by wrapping the joints with the TAL, MET or DUCT sealing tape.

Available materials — Product code example
RPC-...-... – galvanized steel sheet

Product code example
Product code: **RPCL - aaa - bbb**

type
Ød$_1$
Ød$_2$

Dimensions

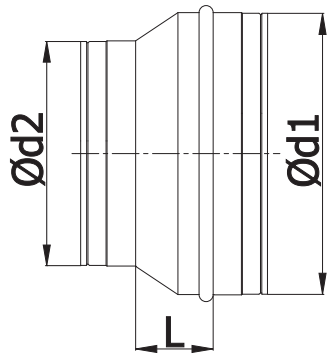

Ød$_{1\ nom}$ (mm)	Ød$_{2\ nom}$ (mm)	L (mm)	Weight (kg)
100	80	18	0.20
125	80	28	0.20
	100	22	0.20
140	100*	30	0.20
	125	30	0.20
150	100	35	0.20
	125	30	0.20
	140	30	0.30
160	80	48	0.30
	100	37	0.30
	125	26	0.20
	140	30	0.30
	150	30	0.30
	160	30	0.30
180	125*	40	0.30
	140*	30	0.30
	150*	30	0.30
	160	30	0.30
200	100	58	0.40
	125	46	0.40
	140*	40	0.30
	150	35	0.30
	160	26	0.30
	180	30	0.30
224	150*	50	0.40
	160*	50	0.40
	180*	30	0.40
	200	30	0.40

ALNOR® ventilation systems
is a registered trademark protected by a technical patent. All modification rights reserved.

Pressed reducer without gasket |male ends

RPC

Dimensions

Ød$_{1\ nom}$ (mm)	Ød$_{2\ nom}$ (mm)	L (mm)	Weight (kg)
250	125	70	0.50
	150	60	0.50
	160	53	0.50
	180*	50	0.40
	200	31	0.60
	224*	50	0.50
280	160*	80	0.60
	180*	70	0.60
	200*	60	0.60
	224*	40	0.60
	250*	30	0.50
300	200*	70	0.70
	224*	60	0.70
	250*	30	0.60
	280*	30	0.70
315	160	88	0.80
	180*	90	0.80
	200	68	0.70
	224*	60	0.70
	250	43	0.70
	280*	40	0.70
	300*	38	0.70
355	200*	110	1.10
	224*	90	1.00
	250*	70	1.00
	315*	30	0.90
400	200*	140	1.50
	224*	120	1.40
	250*	100	1.30
	315*	60	1.30
	355*	30	1.20
450	250*	140	2.00
	280*	110	1.90
	300*	100	1.90
	315*	90	1.80
	355*	60	1.70
	400*	40	1.70
500	250*	128	2.20
	300*	140	2.40
	315*	120	2.20
	355*	100	2.20
	400*	70	2.10
	450*	40	2.10

Ød$_{1\ nom}$ (mm)	Ød$_{2\ nom}$ (mm)	L (mm)	Weight (kg)
560	315*	170	2.90
	355*	140	2.80
	400*	110	2.70
	450*	80	2.60
	500*	75	2.60
600	400*	130	3.10
	450*	100	3.00
	500*	70	2.70
	560*	30	2.40
630	315*	160	3.20
	400*	140	3.30
	450*	120	3.30
	500*	80	3.00
	560*	75	2.90
	600*	30	2.50

*Segmented versions; other versions are pressed only.

ALNOR® ventilation systems
is a registered trademark protected by a technical patent. All modification rights reserved.

Short female reducers

RPCFL



Description

The larger end is female without a gasket to fit over T-pieces and bends. The small end is male with a double EPDM gasket to slip into spiral ducts. This reducer helps to save installation space, but it increases the flow resistance compared to RSCLFL long reducers. Standard nominal diameters up to DN 315 mm are available for pressed pieces at a lower price and with an improved finish.

Available materials — Product code example
RPCFL-...-... – galvanized steel sheet

Product code example
Product code: **RPCFL- aaa - bbb**

type
Ød$_1$
Ød$_2$

Dimensions

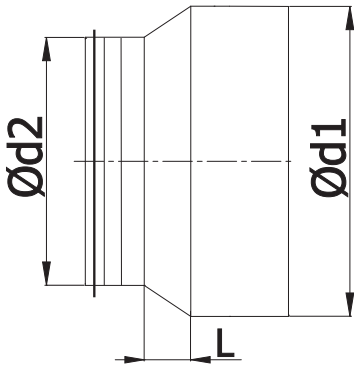

Ød$_{1\ nom}$ (mm)	Ød$_{2\ nom}$ (mm)	L (mm)	Weight (kg)
100	80	10	0.20
125	80	22	0.20
	100	12	0.20
140	100*	30	0.20
	125	30	0.20
150	100	35	0.20
	125	30	0.20
	140	30	0.30
160	80	15	0.30
	100	30	0.30
	125	17	0.20
	140	30	0.30
	150	30	0.30
	160	30	0.30
180	125*	40	0.30
	140*	30	0.30
	150*	30	0.30
	160	30	0.30
200	100	50	0.40
	125	37	0.40
	140*	40	0.30
	150	35	0.30
	160	20	0.30
	180	30	0.30
224	150*	50	0.40
	160*	50	0.40
	180*	30	0.40
	200	30	0.40

ALNOR® ventilation systems
is a registered trademark protected by a technical patent. All modification rights reserved.

Short female reducers
RPCFL

Dimensions

$Ød_{1\ nom}$ (mm)	$Ød_{2\ nom}$ (mm)	L (mm)	Weight (kg)
250	125	40	0.50
	150	60	0.50
	160	45	0.50
	180*	50	0.40
	200	25	0.60
	224*	50	0.40
280	160*	80	0.60
	180*	70	0.60
	200*	60	0.60
	224*	40	0.60
	250*	30	0.50
300	200*	70	0.70
	224*	60	0.70
	250*	30	0.60
	280*	30	0.70
315	160	77	0.80
	180*	90	0.80
	200	57	0.70
	224*	60	0.70
	250	32	0.70
	280*	30	0.70
	300*	30	0.70
355	200*	110	1.10
	224*	90	1.10
	250*	70	1.00
	315*	30	0.90
400	200*	140	1.50
	224*	120	1.40
	250*	100	1.30
	315*	60	1.30
	355*	30	1.20
450	250*	140	2.00
	280*	110	1.90
	300*	100	2.00
	315*	90	2.00
	355*	60	1.80
	400*	40	0.60
500	250*	208	2.20
	300*	140	2.40
	315*	120	2.30
	355*	100	2.20
	400*	70	2.20
	450*	40	2.10

$Ød_{1\ nom}$ (mm)	$Ød_{2\ nom}$ (mm)	L (mm)	Weight (kg)
560	315*	170	2.90
	355*	140	2.80
	400*	110	2.70
	450*	80	2.60
	500*	75	2.60
600	400*	130	3.10
	450*	100	3.00
	500*	70	2.80
	560*	30	2.40
630	400*	140	3.30
	450*	120	3.30
	500*	80	3.00
	560*	75	2.90
	600*	30	2.50

*Segmented versions; other versions are pressed only.

ALNOR® ventilation systems
is a registered trademark protected by a technical patent. All modification rights reserved.

Short female reducers

RPCF



Description

Neither end is provided with a gasket. The larger end is female sized to fit over other male fittings. The small end has a safe edge as a result of the hemmed rim. This piece is perfect for heat recovery systems and mechanical ventilation systems. Standard nominal diameters up to DN 315 mm are available for pressed pieces at a lower price and with an improved finish.

Available materials — Product code example
RPCF-...-... – galvanized steel sheet

Product code example
Product code: **RPCF- aaa - bbb**

type
Ød$_1$
Ød$_2$

Dimensions

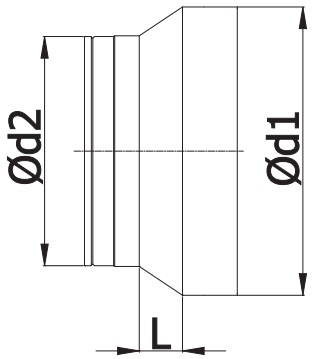

Ød$_{1\ nom}$ (mm)	Ød$_{2\ nom}$ (mm)	L (mm)	Weight (kg)
100	80	10	0.20
125	80	22	0.20
	100	12	0.20
140	100*	30	0.20
	125	30	0.20
150	100	35	0.20
	125	30	0.20
	140	30	0.30
160	80	15	0.30
	100	30	0.30
	125	17	0.20
	140	30	0.30
	150	30	0.30
	160	30	0.30
180	125*	40	0.30
	140*	30	0.30
	150*	30	0.30
	160	30	0.30
200	100	50	0.40
	125	37	0.40
	140*	40	0.30
	150	35	0.30
	160	20	0.30
	180	30	0.30
224	150*	50	0.40
	160*	50	0.40
	180*	30	0.40
	200	30	0.40

ALNOR® ventilation systems
is a registered trademark protected by a technical patent. All modification rights reserved.

Pressed reducer without gasket |male ends

RPCF

Dimensions

Ød$_{1\ nom}$ (mm)	Ød$_{2\ nom}$ (mm)	L (mm)	Weight (kg)
250	125	40	0.50
	150	60	0.50
	160	45	0.50
	180*	50	0.40
	200	25	0.60
	224*	50	0.40
280	160*	80	0.60
	180*	70	0.60
	200*	60	0.60
	224*	40	0.60
	250*	30	0.50
300	200*	70	0.70
	224*	60	0.70
	250*	30	0.60
	280*	30	0.70
315	160	77	0.80
	180*	90	0.80
	200	57	0.70
	224*	60	0.70
	250	32	0.70
	280*	30	0.70
	300*	30	0.70
355	200*	110	1.10
	224*	90	1.10
	250*	70	1.00
	315*	30	0.90
400	200*	140	1.50
	224*	120	1.40
	250*	100	1.30
	315*	60	1.30
	355*	30	1.20
450	250*	140	2.00
	280*	110	1.90
	300*	100	2.00
	315*	90	2.00
	355*	60	1.80
	400*	40	0.60
500	250*	208	2.20
	300*	140	2.40
	315*	120	2.30
	355*	100	2.20
	400*	70	2.20
	450*	40	2.10

Ød$_{1\ nom}$ (mm)	Ød$_{2\ nom}$ (mm)	L (mm)	Weight (kg)
560	315*	170	2.90
	355*	140	2.80
	400*	110	2.70
	450*	80	2.60
	500*	75	2.60
600	400*	130	3.10
	450*	100	3.00
	500*	70	2.80
	560*	30	2.40
630	400*	140	3.30
	450*	120	3.30
	500*	80	3.00
	560*	75	2.90
	600*	30	2.50

*Segmented versions; other versions are pressed only.

ALNOR® ventilation systems
is a registered trademark protected by a technical patent. All modification rights reserved.

Technical specifications

1st reduction stage

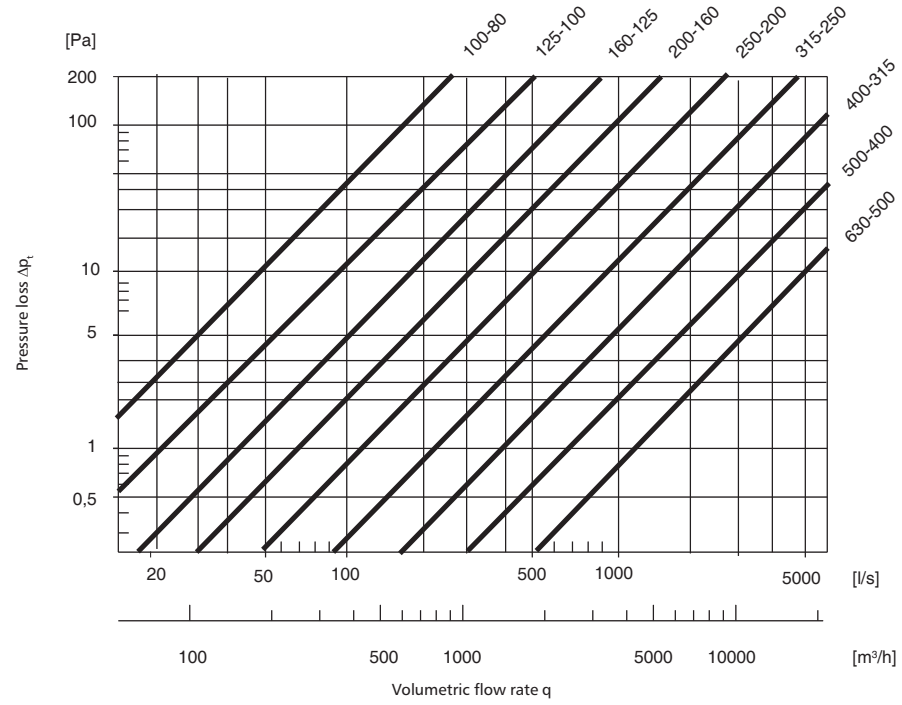

2nd reduction stage

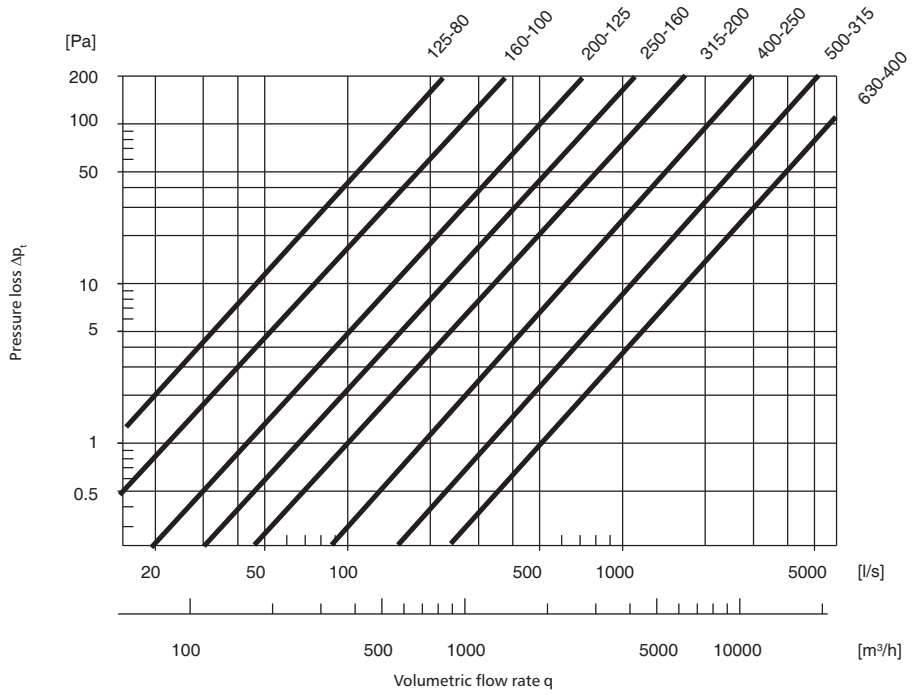

ALNOR® ventilation systems
is a registered trademark protected by a technical patent. All modification rights reserved.

Ventilation duct reducers

RPCL/RPCFL/RPC/RPCF

Technical specifications

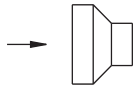

3rd reduction stage

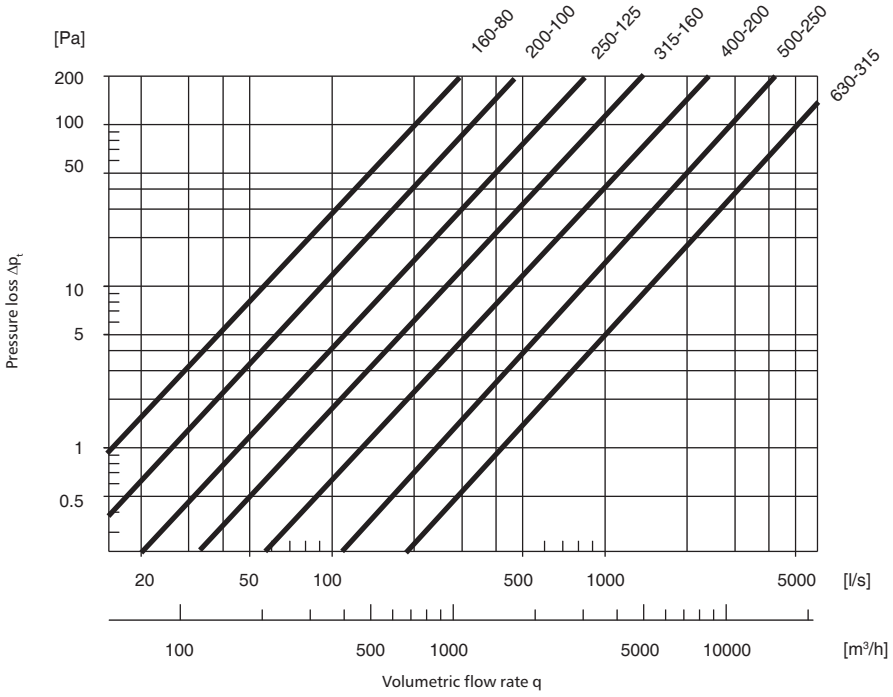

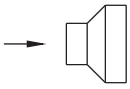

1st reduction stage

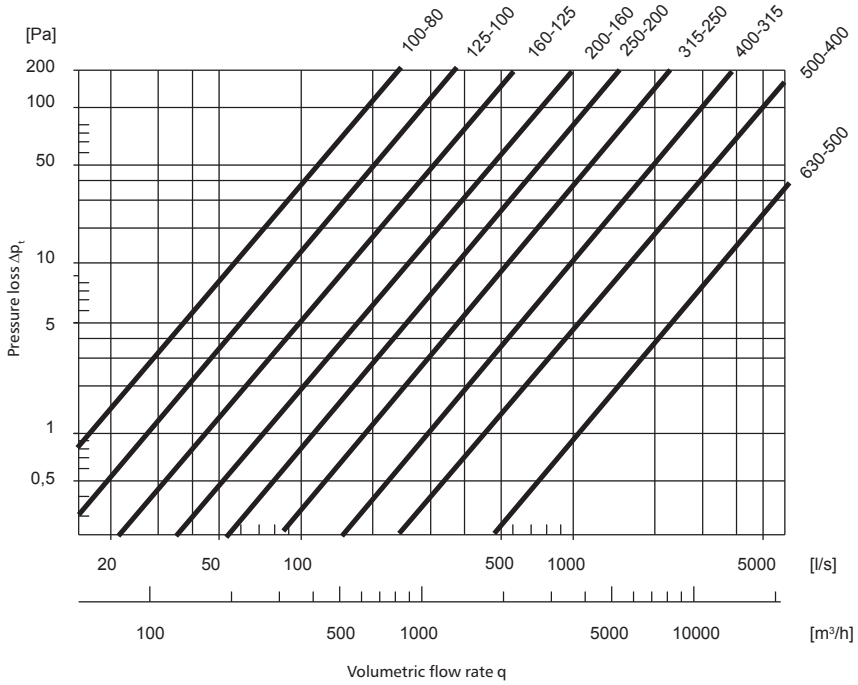

ALNOR® ventilation systems
is a registered trademark protected by a technical patent. All modification rights reserved.

Technical specifications

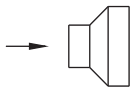

2nd reduction stage

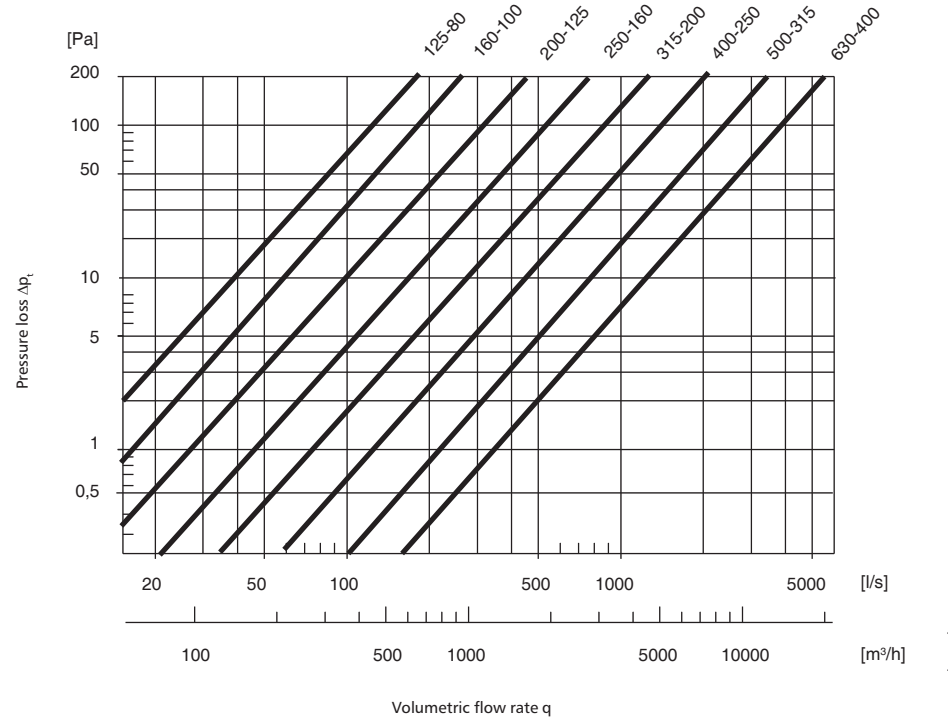

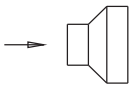

3rd reduction stage

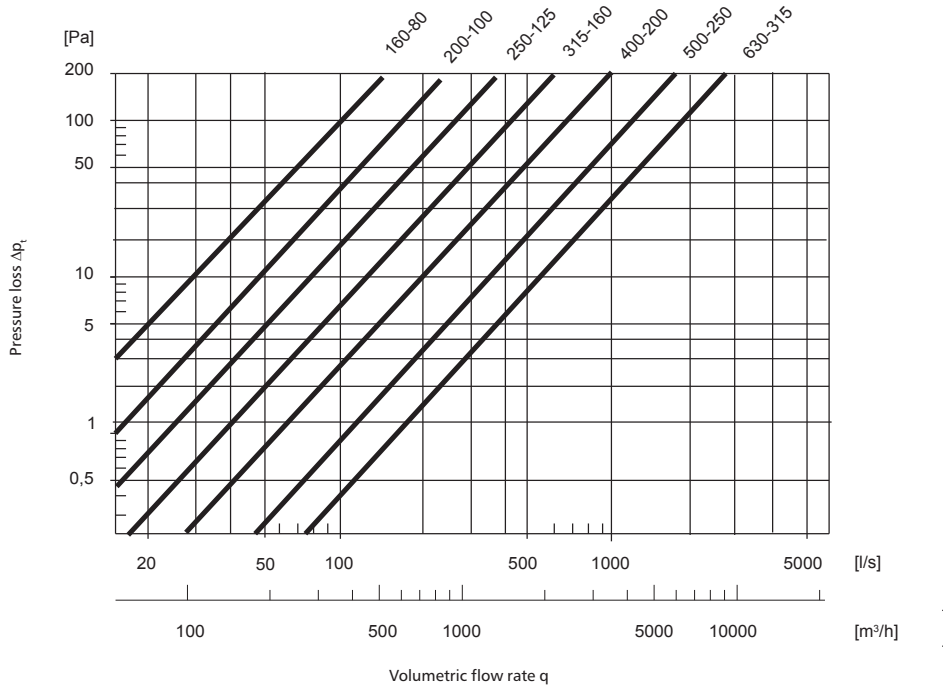

ALNOR® ventilation systems
is a registered trademark protected by a technical patent. All modification rights reserved.

Long reducers

RSCLL/RSLL/RSCLFL/RSLFL/RSCL/RSL/RSCLF/RSLF

RSCLL



RSLFL



Description

Long reducers are used in ventilation systems in industrial, office and housing buildings. They are installed in systems made of spiral ducts, bends and other fittings. The reduced diameter acts as a confusor to increase the air flow rate. When installed with the large diameter towards the incoming air flow, the piece works like a diffuser. All reducers are available in galvanized steel sheet, stainless steel sheet or aluminium sheet. Eccentric reducers are known as a reducers with one flat side, therefore they are used when the ductwork is supposed to be installed tight to the ceiling slab or onto the wall.

RSCLL – concentric reducer with double male ends and EPDM gaskets
RSLL – eccentric reducer with double male ends and EPDM gaskets
RSCLFL – concentric reducer with male-to-female ends and an EPDM gasket
RSLFL – eccentric reducer with male-to-female ends and an EPDM gasket
RSCL – concentric reducer with double male ends and without gaskets
RSL – eccentric reducer with double male ends and without gaskets
RSCLF – concentric reducer with male-to-female ends and without gaskets
RSLF – eccentric reducer with male-to-female ends and without gaskets
$Ød_2$ – suitable for SPR ducts
$Ød_1$ – suitable for SPR ducts or direct connections with fittings

Available materials — Product code example

RSLL-... -... – galvanized steel sheet
RSLL-K-.. -... — 1.4301/304 stainless steel sheet
RSLL-K-.. -...-316L — 1.4404/316L stainless steel sheet, molybdenum-enriched
RSLL-A-... -... — AW-1050A H24 aluminium sheet
RSLL-CU-... -... — M1E z4 copper sheet

Product code example

Product code: **RSLL - aaa - bbb**

type
$Ød_1$
$Ød_2$

Technical specifications

RSCLL

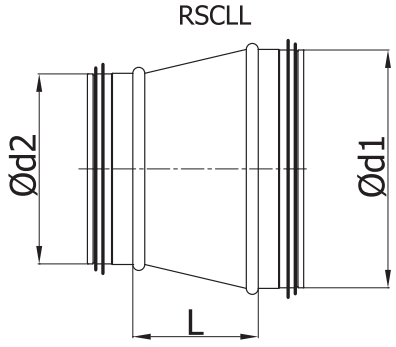

RSLFL

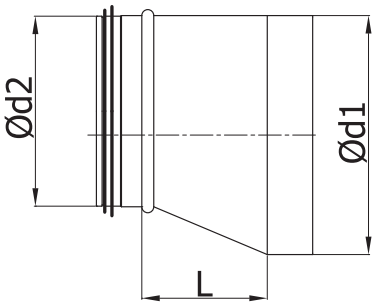

ALNOR® ventilation systems
is a registered trademark protected by a technical patent. All modification rights reserved.

Long reducers

RSCLL/RSLL/RSCLFL/RSLFL/RSCL/RSL/RSCLF/RSLF

Dimensions

$Ød_{1\ nom}$ (mm)	$Ød_{2\ nom}$ (mm)	L (mm)	Weight (kg)
100	80	47	0.17
112	80	74	0.18
	100	47	0.20
125	80	74	0.24
	100	52	0.23
140	80	90	0.28
	100	69	0.27
	125	46	0.25
150	80	102	0.31
	100	80	0.30
	125	51	0.27
	140	35	0.25
160	80	113	0.35
	100	91	0.34
	125	63	0.31
	140	46	0.29
	150	35	0.27
180	80	135	0.43
	100	113	0.41
	125	86	0.38
	140	69	0.36
	150	57	0.35
	160	47	0.33
200	80	157	0.50
	100	135	0.49
	125	107	0.46
	140	90	0.43
	150	80	0.42
	160	69	0.40
	180	47	0.37
224	100	162	0.60
	125	134	0.57
	140	118	0.55
	150	106	0.53
	160	96	0.51
	180	73	0.47
	200	50	0.42
250	100	191	0.72
	125	163	0.69
	140	146	0.67
	150	135	0.65
	160	124	0.64
	180	102	0.60
	200	80	0.55
	224	53	0.50

$Ød_{1\ nom}$ (mm)	$Ød_{2\ nom}$ (mm)	L (mm)	Weight (kg)
280	125	196	0.94
	140	180	0.91
	150	169	0.90
	160	158	0.88
	180	135	0.84
	200	113	0.78
	224	87	0.72
	250	57	0.65
300	125	219	1.10
	140	203	1.00
	150	191	1.00
	160	180	0.99
	180	158	0.95
	200	135	0.90
	224	109	0.85
	250	80	0.76
	280	47	0.73
315	125	235	1.15
	140	219	1.12
	150	208	1.08
	160	196	1.05
	180	175	1.00
	200	152	1.00
	224	125	0.93
	250	96	0.85
	280	63	0.82
	300	41	0.79
355	160	241	1.64
	180	219	1.60
	200	196	1.52
	224	170	1.45
	250	141	1.40
	280	108	1.30
	300	86	1.15
	315	69	1.10
400	160	295	2.20
	180	273	2.00
	200	226	1.95
	224	210	1.87
	250	175	1.65
	280	162	1.82
	300	139	1.62
	315	110	1.55
	355	71	1.40

ALNOR® ventilation systems
is a registered trademark protected by a technical patent. All modification rights reserved.

Long reducers

RSCLL/RSLL/RSCLFL/RSLFL/RSCL/RSL/RSCLF/RSLF

Dimensions

$Ød_{1\ nom}$ (mm)	$Ød_{2\ nom}$ (mm)	L (mm)	Weight (kg)
450	200	276	3.20
	224	258	3.10
	250	226	3.00
	280	210	2.90
	300	194	2.75
	315	160	2.65
	355	121	2.45
	400	79	2.25
500	200	362	3.90
	224	335	3.80
	250	276	3.70
	280	264	3.60
	300	251	3.50
	315	211	3.35
	355	170	3.15
	400	129	3.00
	450	79	2.70
560	250	377	4.70
	280	340	4.50
	300	317	4.40
	315	300	4.30
	355	257	4.10
	400	211	3.90
	450	154	3.60
	500	98	3.20
600	250	447	5.20
	280	404	5.00
	300	382	4.90
	315	365	4.60
	355	321	4.60
	400	275	4.50
	450	219	4.20
	500	164	3.80
	560	96	2.30
630	250	451	5.90
	280	418	5.70
	250	451	5.90
	280	418	5.70
	300	395	5.60
	315	379	5.50
	355	334	5.30
	400	288	5.00
	450	232	4.80
	500	177	4.30
	560	110	3.60
	600	73	3.50

$Ød_{1\ nom}$ (mm)	$Ød_{2\ nom}$ (mm)	L (mm)	Weight (kg)
710	355	428	8.60
	400	381	8.30
	450	325	7.90
	500	269	7.30
	560	202	6.20
	600	159	5.80
	630	125	5.40
800	400	480	10.7
	450	426	10.30
	500	386	9.70
	560	304	8.90
	600	259	8.40
	630	226	7.70
	710	140	7.00
900	450	536	12.80
	500	480	12.70
	560	414	11.60
	600	370	11.00
	630	337	10.70
1000	500	592	16.20
	560	525	15.40
	600	481	14.80
	630	447	14.30
	710	363	13.50
	800	263	11.70
	900	151	9.50
1120	560	659	21.80
	600	574	21.30
	630	552	20.70
	710	496	19.80
	800	397	17.70
	900	284	15.30
	1000	174	12.70
	900	151	9.50
1250	600	884	26.0
	630	726	25.5
	710	641	24.4
	800	541	22.8
	900	429	20.4
	1000	318	17.7
	1120	184	15.8

ALNOR® ventilation systems
is a registered trademark protected by a technical patent. All modification rights reserved.

Long reducers

RSCLL/RSLL/RSCLFL/RSLFL/RSCL/RSL/RSCLF/RSLF

Dimensions

$Ød_{1\ nom}$ (mm)	$Ød_{2\ nom}$ (mm)	L (mm)	Weight (kg)
1400	600	874	33.3
	630	854	33.0
	710	795	32.8
	800	736	31.9
	900	613	29.0
	1000	508	26.6
	1120	459	26.0
	1250	432	25.7
1500	630	981	38.8
	710	910	38.3
	800	778	35.4
	900	709	34.0
	1000	605	31.6
	1120	523	29.8
	1250	440	27.5
	1400	366	25.3
1600	710	1038	44.5
	800	972	43.6
	900	785	38.6
	1000	711	37.2
	1120	626	35.4
	1250	477	30.6
	1400	380	27.2
	1500	270	24.1

ALNOR® ventilation systems
is a registered trademark protected by a technical patent. All modification rights reserved.

Long reducers

RSCLL/RSLL/RSCLFL/RSLFL/RSCL/RSL/RSCLF/RSLF

Technical specifications

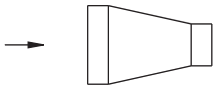

1st reduction stage

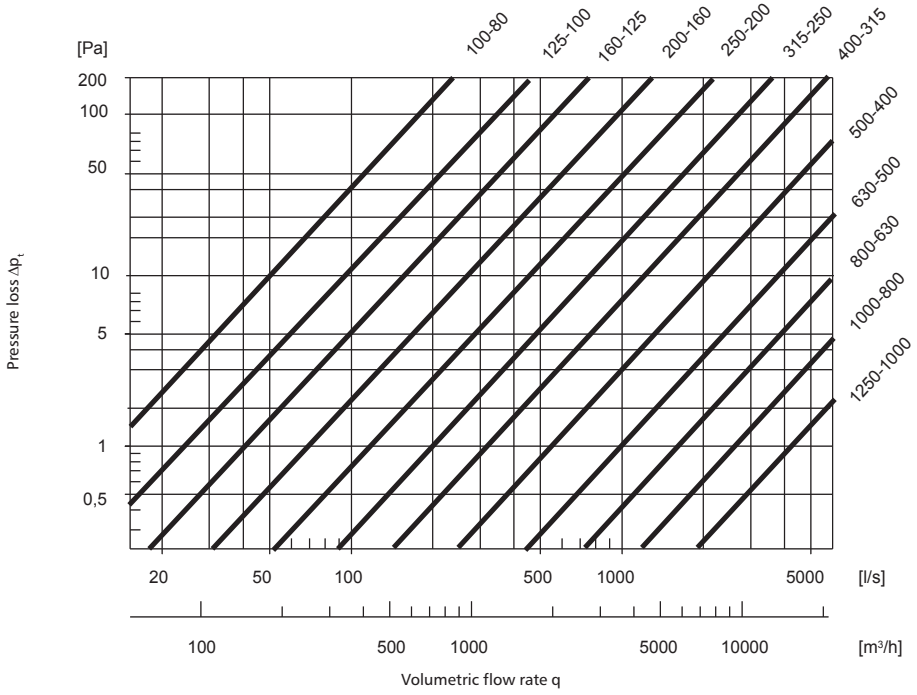

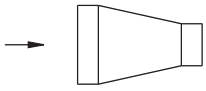

2nd reduction stage

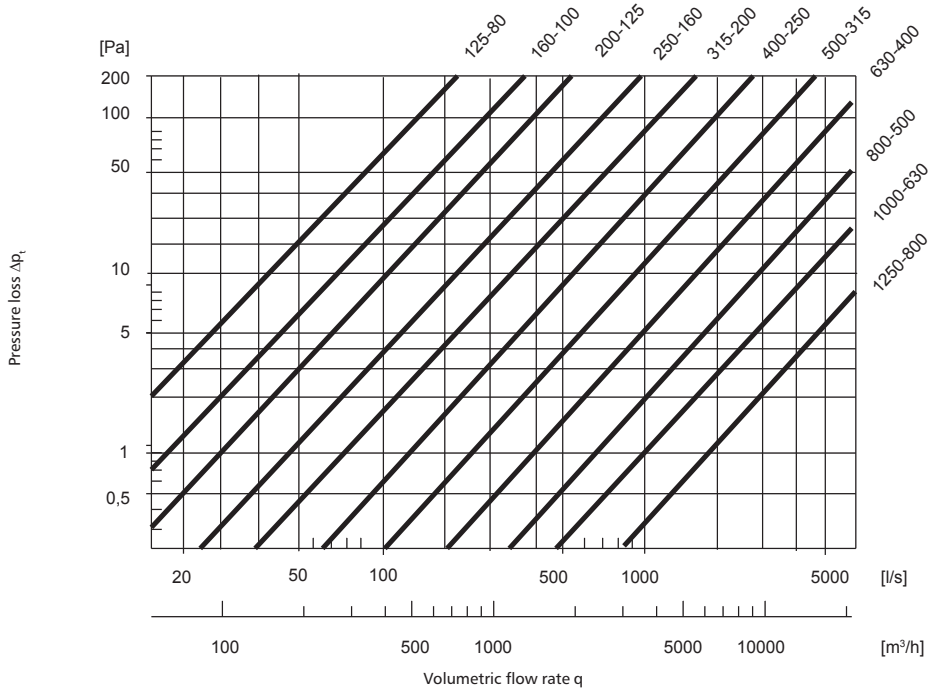

ALNOR® ventilation systems
is a registered trademark protected by a technical patent. All modification rights reserved.

Technical specifications

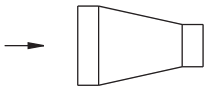

3rd reduction stage

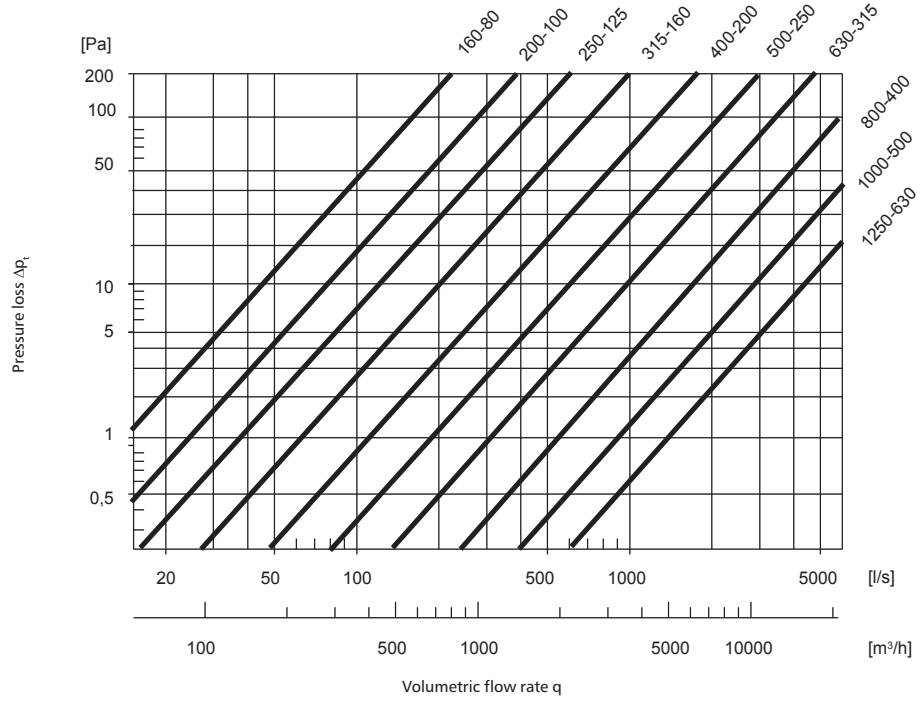

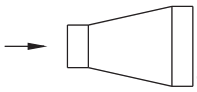

1st reduction stage

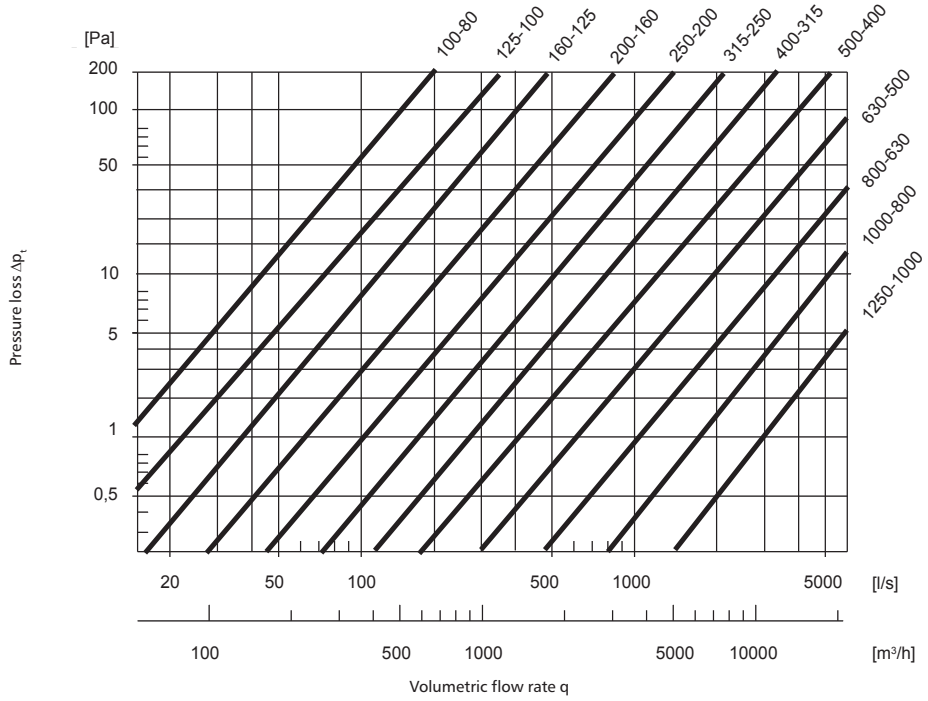

ALNOR® ventilation systems
is a registered trademark protected by a technical patent. All modification rights reserved.

Long reducers

RSCLL/RSLL/RSCLFL/RSLFL/RSCL/RSL/RSCLF/RSLF

Technical specifications

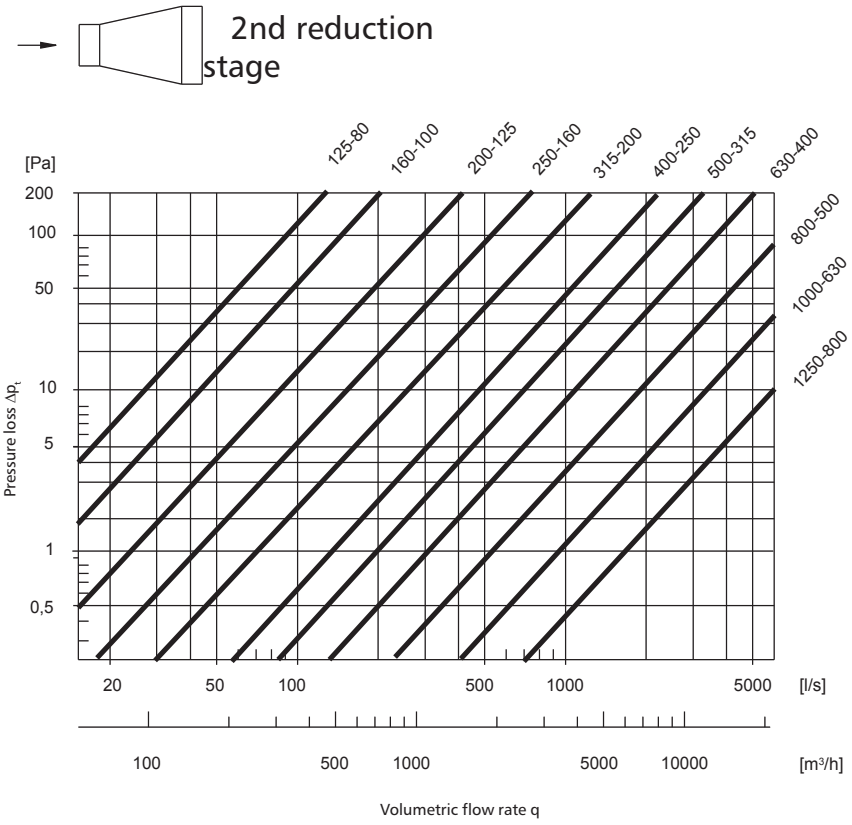

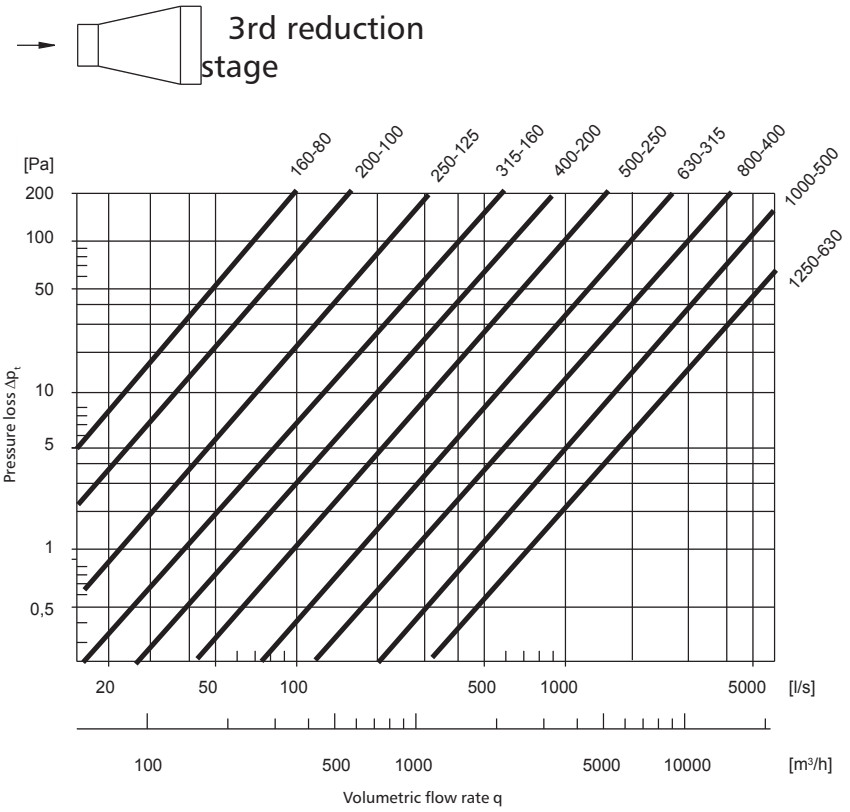

ALNOR® ventilation systems
is a registered trademark protected by a technical patent. All modification rights reserved.

Flat segmented reducers
RSFC/RSFCF/RSFCL/RSFCFL/RSF/RSFF/RSFL/RSFFL



Description

Flat segmented reducers have end caps with a port of a smaller diameter than the flat body diameter. They are most often used for building ventilation duct penetrations in floor partitions. Concentric reducers can be installed as silencer dips or used for capping SPRPI ducts to build duct silencers as much as 3 metre long.

RSFC – flat concentric segmented reducer with double male ends
RSFCF – flat concentric segmented male-to-female reducer
RSFCL – flat concentric segmented reducer with double male ends and an EPDM gasket
RSFCFL– flat concentric segmented male-to-female reducer with an EPDM gasket
RSF – flat eccentric segmented reducer with double male ends
RSFF – flat eccentric segmented male-to-female reducer
RSFL – flat eccentric segmented reducer with double male ends and an EPDM gasket
RSFFL – flat eccentric segmented male-to-female reducer with an EPDM gasket
$Ød_1$ $Ød_2$ – suitable for SPR ducts

Flat reducers are available in any sizes $C \leq C_{max}$.

Available materials — Product code example
RSFC-... -... – galvanized steel sheet
RSFC-K-... -... — 1.4301/304 stainless steel sheet
RSFC-K-... -...-316L — 1.4404/316L stainless steel sheet, molybdenum-enriched
RSFC-A-... -... — AW-1050A H24 aluminium sheet
RSFC-CU-... -... — M1E z4 copper sheet

Product code example
Product code: **RSFC- aaa - bbb**

type
$Ød_1$
$Ød_2$

Dimensions

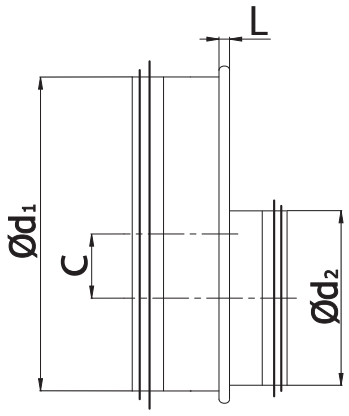

$Ød_{1\ nom}$ (mm)	$Ød_{2\ nom}$ (mm)	C_{max} (mm)	L (mm)	Weight (kg)
200	100	40	5	0.3
	125	27.5	5	0.2
	150	15	5	0.3
	160	10	5	0.2
250	125	52.5	5	0.3
	150	40	5	0.3
	160	35	5	0.3
	200	15	5	0.3
315	160	67.5	5	0.5
	200	47.5	5	0.5
	250	22.5	5	0.4
355	160	87.5	5	0.7
	180	77.5	5	0.7
	200	67.5	5	0.7
	224	57.5	5	0.6
	250	42.5	5	0.6
	280	205	5	0.6
	300	17.5	5	0.6
	315	10	5	0.5
400	200	90	5	1.1
	224	78	5	1.1
	250	65	5	1.2
	280	50	5	1.0
	300	40	5	1.0
	315	33	5	0.9
	355	13	5	0.9
450	250	90	5	1.7
	280	75	5	1.5
	300	65	5	1.5
	315	58	5	1.6
	355	38	5	1.4
	400	15	5	1.5

ALNOR® ventilation systems
is a registered trademark protected by a technical patent. All modification rights reserved.

Flat segmented reducers

RSFC/RSFCF/RSFCL/RSFCFL/RSF/RSFF/RSFL/RSFFL

Dimensions

$Ød_{1\ nom}$ (mm)	$Ød_{2\ nom}$ (mm)	C_{max} (mm)	L (mm)	Weight (kg)
500	250	115	5	2.2
	280	100	5	2.1
	300	90	5	2.0
	315	83	5	2.1
	355	63	5	2.2
	400	40	5	2.0
	450	15	5	1.9
560	315	113	5	2.2
	355	93	5	2.2
	400	70	5	2.2
	450	45	5	2.1
	500	20	5	1.8
600	315	133	5	2.5
	355	113	5	2.6
	400	90	5	2.6
	450	65	5	2.3
	500	40	5	2.2
	560	10	5	2.0
630	315	148	5	3.6
	355	128	5	2.9
	400	105	5	2.8
	450	80	5	2.5
	500	55	5	2.6
	560	25	5	2.2
	600	5	5	2.1

ALNOR® ventilation systems
is a registered trademark protected by a technical patent. All modification rights reserved.

Pressed branch saddle with gasket
SPL



Description

Pressed saddles are designed for fabricating ventilation duct T-pieces. They can also be used as splices for branching the main round ventilation ducts with round SPIRAL ducts, FLX flexible ducts, or sonoducts. The rounding radius of the branch base improves the air flow, ensuring better energy efficiency of ventilation, and the end with an EPDM gasket meets requirements of air tightness class D according to EN 12237. The piece can be used with several different diameter sizes, as shown in the selection table.

Available materials — Product code example
SPL-... -... – galvanized steel sheet

Product code example
Product code: **SPL - aaa - bbb**

type
Ød$_1$
Ød$_3$

Dimensions

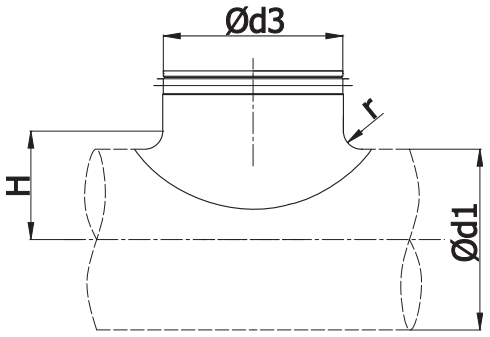

Ød$_{1\ nom}$-Ød$_{2\ nom}$ (mm)	diameter range for Ød$_1$nom (mm)	r (mm)	H (mm)	Weight (kg)
80-80		10	50	0.1
100-80	100 - 112	10	60	0.1
125-80	112 - 125 - 140	10	72	0.1
160-80	150 - 160	10	90	0.1
200-80	180 - 200	10	110	0.1
250-80	224 - 250 - 280 300 - 315	10	135	0.1
100-100		12	62	0.2
125-100	112 - 125 - 140	12	74	0.2
160-100	150 - 160	12	92	0.2
200-100	180 - 200	12	112	0.2
250-100	224 - 250	12	137	0.2
315-100	280 - 300 - 315 - 355	12	169	0.2
500-100	400 - 450 - 500 - 560	12	262	0.2
125-125		12	74	0.3
160-125	140 - 150 - 160	12	92	0.3
200-125	180 - 200	12	112	0.3
250-125	224 - 250	12	137	0.2
315-125	280 - 300 - 315 - 355	12	169	0.2
500-125	400 - 450 - 500 - 560	12	262	0.3
200-150	180 - 200	12	112	0.3
250-150	224 - 250	12	137	0.3
315-150	280 - 300 - 315 - 355	12	169	0.3
160-160		16	96	0.4
200-160	180 - 200	16	116	0.4
250-160	224 - 250	16	141	0.4
315-160	280 - 300 - 315	16	173	0.3
400-160	355 - 400	16	216	0.3

ALNOR® ventilation systems
is a registered trademark protected by a technical patent. All modification rights reserved.

Pressed branch saddle with gasket
SPL

Dimensions

$Ød_{1\ nom}$-$Ød_{2\ nom}$ *(mm)*	*diameter range for* $Ød_1 nom$ *(mm)*	*r (mm)*	*H (mm)*	*Weight (kg)*
200-200		20	120	0.5
250-200	224 - 250	20	145	0.5
315-200	280 - 300 - 315	20	177	0.5
400-200	355 - 400	20	220	0.5
250 - 250		20	145	0.7
315-250	280 - 300 - 315	20	177	0.7
400-250	355 - 400	20	220	0.7
315-315		20	177	0.7
355-315	315 - 355 - 400	20	197	0.7
400-315	355 - 400 - 450	20	220	0.8

ALNOR® ventilation systems
is a registered trademark protected by a technical patent. All modification rights reserved.

Pressed branch saddle without gasket

SP



Description

Pressed galvanized sheet saddles without gaskets are universal components for fabricating straight T-pieces and X-pieces.

Available materials — Product code example
SP-... -... – galvanized steel sheet

Product code example
Product code: **SPL - aaa - bbb**

type
$Ød_1$
$Ød_3$

Dimensions

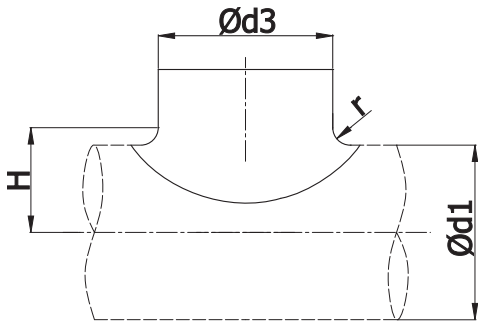

$Ød_{1\ nom}$-$Ød_{2\ nom}$ (mm)	diameter range for $Ød_1$nom (mm)	r (mm)	H (mm)	Weight (kg)
80-80		10	50	0.1
100-80	100 - 112	10	60	0.1
125-80	112 - 125 - 140	10	72	0.1
160-80	150 - 160	10	90	0.1
200-80	180 - 200	10	110	0.1
250-80	224 - 250 - 280 300 - 315	10	135	0.1
100-100		12	62	0.2
125-100	112 - 125 - 140	12	74	0.2
160-100	150 - 160	12	92	0.2
200-100	180 - 200	12	112	0.2
250-100	224 - 250	12	137	0.2
315-100	280 - 300 - 315 - 355	12	169	0.2
500-100	400 - 450 - 500 - 560	12	262	0.2
125-125		12	74	0.3
160-125	140 - 150 - 160	12	92	0.3
200-125	180 - 200	12	112	0.3
250-125	224 - 250	12	137	0.2
315-125	280 - 300 - 315 - 355	12	169	0.2
500-125	400 - 450 - 500 - 560	12	262	0.3
200-150	180 - 200	12	112	0.3
250-150	224 - 250	12	137	0.3
315-150	280 - 300 - 315 - 355	12	169	0.3
160-160		16	96	0.4
200-160	180 - 200	16	116	0.4
250-160	224 - 250	16	141	0.4
315-160	280 - 300 - 315	16	173	0.3
400-160	355 - 400	16	216	0.3

Pressed branch saddle without gasket

SP

Dimensions

$Ød_{1\ nom}$-$Ød_{2\ nom}$ (mm)	diameter range for $Ød_1$nom (mm)	r (mm)	H (mm)	Weight (kg)
200-200		20	120	0.5
250-200	224 - 250	20	145	0.5
315-200	280 - 300 - 315	20	177	0.5
400-200	355 - 400	20	220	0.5
250 - 250		20	145	0.7
315-250	280 - 300 - 315	20	177	0.7
400-250	355 - 400	20	220	0.7
315-315		20	177	0.7
355-315	315 - 355 - 400	20	197	0.7
400-315	355 - 400 - 450	20	220	0.8

ALNOR® ventilation systems
is a registered trademark protected by a technical patent. All modification rights reserved.

Segmented collar saddle

SPSL



Description

SPSL short segmented collar saddles are universal pieces for fabricating ventilation duct T-pieces. They can also be used as splices for branching the main round ventilation ducts with SPIRAL ducts, FLX flexible ducts, or aluducts. The end with an EPDM gasket meets Requirements of air tightness class D according to EN 122347. While the flange installed on a round duct is rather short (5-7 mm) and requires careful handling, the low material consumption makes the product very affordable.

Available materials — Product code example

SPSL-... -... – galvanized steel sheet
SPSL-K-.. -... — 1.4301/304 stainless steel sheet
SPSL-K-.. -...-316L — 1.4404/316L stainless steel sheet, molybdenum-enriched
SPSL-A-... -... — AW-1050A H24 aluminium sheet
SPSL-CU-... -... — M1E z4 copper sheet

Product code example

Product code: **SPSL - aaa - bbb**

type
Ød$_1$
Ød$_3$

Dimensions

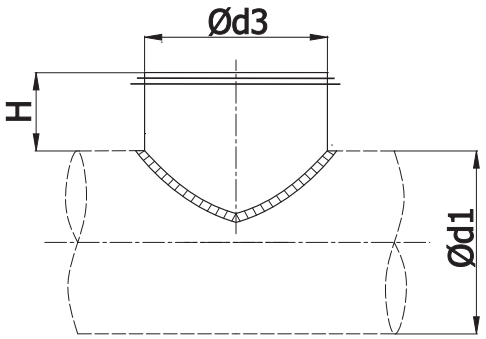

Ød$_{1\ nom}$ (mm)	Ød$_{3\ nom}$ (mm)	H (mm)	Weight (kg)
100	100	60	0.30
125	100	60	0.35
	125	60	0.40
140	140	60	0.45
150	140	60	0.60
160	100	60	0.42
	125	60	0.48
	140	60	0.65
	160	60	0.70
180	140	60	0.70
	180	60	0.80
200	100	60	0.50
	125	60	0.60
	140	60	0.62
	160	60	0.70
	180	60	0.78
	200	60	0.82
224	140	60	0.90
	180	60	1.00
	224	60	1.15
250	125	60	0.80
	140	60	1.00
	160	60	0.90
	180	60	1.20
	200	60	1.30
280	140	60	1.00
	180	60	1.10
	200	60	1.20
	224	60	1.50
	280	80	1.80
300	140	60	1.26
	180	60	1.42
	200	60	1.45
	224	60	1.60
	250	60	1.80
	300	80	2.00

ALNOR® ventilation systems
is a registered trademark protected by a technical patent. All modification rights reserved.

Segmented collar saddle

SPSL

Dimensions

Ød$_{1\ nom}$ (mm)	Ød$_{3\ nom}$ (mm)	H (mm)	Weight (kg)
315	140	60	1.30
	180	60	1.45
	200	60	1.50
	224	60	1.68
	250	60	1.80
	280	60	1.90
	300	80	2.00
	315	80	2.13
355	100	60	1.30
	125	60	1.40
	140	60	1.48
	150	60	1.50
	160	60	1.60
	180	60	1.60
	200	60	1.80
400	100	60	1.65
	125	60	1.78
	140	60	1.85
	150	60	1.90
	160	60	1.95
	180	60	2.00
	200	60	2.20
	224	60	2.30
	250	60	2.45
	280	60	2.60
	300	80	2.80
	315	80	2.85
	355	80	3.00
	400	80	3.32
	400*	70	2.20
	450*	40	2.10
450	100	60	1.85
	125	60	2.00
	140	60	2.00
	150	60	1.90
	160	60	1.95
	180	60	2.30
	200	60	2.46
	224	60	2.57
	250	60	2.74
	280	60	3.00
	300	80	3.10
	315	60	3.00
	355	80	3.40
	400	80	3.80
	450	80	4.00

Ød$_{1\ nom}$ (mm)	Ød$_{3\ nom}$ (mm)	H (mm)	Weight (kg)
500	100	60	2.00
	125	60	2.20
	140	60	2.30
	160	60	2.45
	180	60	2.54
	200	60	2.73
	224	60	2.85
	250	60	3.00
	300	70	3.35
	315	80	3.50
	355	80	3.75
	400	80	4.20
	450	80	4.40
	500	80	4.68
560	200	60	3.50
	224	60	3.80
	250	60	4.00
	280	60	4.10
	300	70	4.50
	315	80	4.66
	355	80	4.98
	400	80	5.45
	450	80	5.80
	500	80	6.25
	560	80	6.70
600	224	60	4.00
	250	60	4.35
	300	70	4.80
	315	80	4.85
	355	80	5.20
	400	80	5.80
	450	80	6.00
	500	80	6.50
	600	80	7.50
630	200	60	4.10
	224	60	4.30
	250	60	4.55
	280	60	4.80
	300	70	5.00
	315	80	5.20
	355	80	5.40
	400	80	6.27
	450	80	6.50
	500	80	6.95
	560	80	7.30
	630	80	8.20

ALNOR® ventilation systems
is a registered trademark protected by a technical patent. All modification rights reserved.

Short collar saddle

SPS



Description

SPS short segmented collar saddles are universal pieces for fabricating ventilation duct T-pieces. They can also be used as splices for branching the main round ventilation ducts with spiral ducts, FLX flexible ducts, or aluducts. While the flange installed on a round duct is rather short (5-7 mm) and requires careful handling, the low material consumption makes the product very affordable.

Available materials — Product code example

SPS-... -... – galvanized steel sheet
SPS-K-.. -... — 1.4301/304 stainless steel sheet
SPS-K-.. -...-316L — 1.4404/316L stainless steel sheet, molybdenum-enriched
SPS-A-... -... — AW-1050A H24 aluminium sheet
SPS-CU-... -... — M1E z4 copper sheet

Product code example

Product code: **SPS - aaa - bbb**

type
Ød$_1$
Ød$_2$

Dimensions

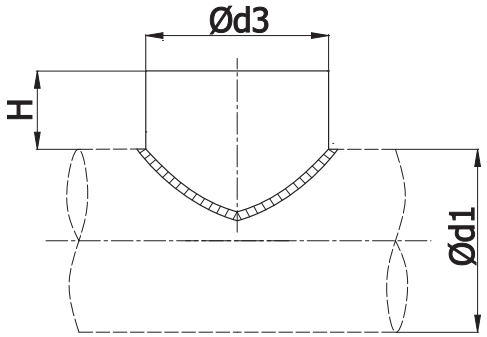

Ød$_{1\ nom}$ (mm)	Ød$_{3\ nom}$ (mm)	H (mm)	Weight (kg)
100	100	60	0.30
125	100	60	0.35
	125	60	0.40
140	140	60	0.45
150	140	60	0.60
160	100	60	0.42
	125	60	0.48
	140	60	0.65
	160	60	0.70
180	140	60	0.70
	180	60	0.80
200	100	60	0.50
	125	60	0.60
	140	60	0.62
	160	60	0.70
	180	60	0.78
	200	60	0.82
224	140	60	0.90
	180	60	1.00
	224	60	1.15
250	125	60	0.80
	140	60	1.00
	160	60	0.90
	180	60	1.20
	200	60	1.30
280	140	60	1.00
	180	60	1.10
	200	60	1.20
	224	60	1.50
	280	80	1.80

ALNOR® ventilation systems
is a registered trademark protected by a technical patent. All modification rights reserved.

Short collar saddle

SPS

Dimensions

$Ød_{1\ nom}$ (mm)	$Ød_{3\ nom}$ (mm)	H (mm)	Weight (kg)
300	140	60	1.26
	180	60	1.42
	200	60	1.45
	224	60	1.60
	250	60	1.80
	300	80	2.00
315	140	60	1.30
	180	60	1.45
	200	60	1.50
	224	60	1.68
	250	60	1.80
	280	60	1.90
	300	80	2.00
	315	80	2.13
355	100	60	1.30
	125	60	1.40
	140	60	1.48
	150	60	1.50
	160	60	1.60
	180	60	1.60
	200	60	1.80
400	100	60	1.65
	125	60	1.78
	140	60	1.85
	150	60	1.90
	160	60	1.95
	180	60	2.00
	200	60	2.20
	224	60	2.30
	250	60	2.45
	280	60	2.60
	300	80	2.80
	315	80	2.85
	355	80	3.00
	400	80	3.32

$Ød_{1\ nom}$ (mm)	$Ød_{3\ nom}$ (mm)	H (mm)	Weight (kg)
450	100	60	1.85
	125	60	2.00
	140	60	2.00
	150	60	1.90
	160	60	1.95
	180	60	2.30
	200	60	2.46
	224	60	2.57
	250	60	2.74
	280	60	3.00
	300	80	3.10
	315	60	3.00
	355	80	3.40
	400	80	3.80
	450	80	4.00
500	100	60	2.00
	125	60	2.20
	140	60	2.30
	160	60	2.45
	180	60	2.54
	200	60	2.73
	224	60	2.85
	250	60	3.00
	300	70	3.35
	315	80	3.50
	355	80	3.75
	400	80	4.20
	450	80	4.40
	500	80	4.68
560	200	60	3.50
	224	60	3.80
	250	60	4.00
	280	60	4.10
	300	70	4.50
	315	80	4.66
	355	80	4.98
	400	80	5.45
	450	80	5.80
	500	80	6.25
	560	80	6.70

ALNOR® ventilation systems
is a registered trademark protected by a technical patent. All modification rights reserved.

Short collar saddle

SPS

Dimensions

$Ød_{1\ nom}$ (mm)	$Ød_{3\ nom}$ (mm)	H (mm)	Weight (kg)
600	224	60	4.00
	250	60	4.35
	300	70	4.80
	315	80	4.85
	355	80	5.20
	400	80	5.80
	450	80	6.00
	500	80	6.50
	600	80	7.50
630	200	60	4.10
	224	60	4.30
	250	60	4.55
	280	60	4.80
	300	70	5.00
	315	80	5.20
	355	80	5.40
	400	80	6.27
	450	80	6.50
	500	80	6.95
	560	80	7.30
	630	80	8.20

ALNOR® ventilation systems
is a registered trademark protected by a technical patent. All modification rights reserved.

Full-size collar saddle

SSCL/SSL/SSC/SS

SSL



SSCL



Description

Full-size segmented collar saddles allow fabricating round duct branches at the ductwork points that can only be defined when the main ventilation ducts have been installed. The collar saddle is installed by cutting an opening to match in a spiral or plain duct and fastening the piece with rivets or self-drilling screws. The joint edges need to be sealed with a silicone or acrylic compound. This product is specifically recommended for branching systems that require air tightness class D according to EN 12237. This is the only saddle that allows fabrication of offset branches with the branch duct diameter larger than the main pipe.

SSCL – concentric collar saddle with an EPDM gasket
SSL – eccentric collar saddle with an EPDM gasket
SSC – concentric collar saddle without a gasket
SS – eccentric collar saddle without a gasket
90° profile intended for installation on round ducts.

Available materials — Product code example

SSL-... -... – galvanized steel sheet
SSL-K-.. -... — 1.4301/304 stainless steel sheet
SSL-K-.. -...-316L — 1.4404/316L stainless steel sheet, molybdenum-enriched
SSL-A-... -... — AW-1050A H24 aluminium sheet
SSL-CU-... -... — M1E z4 copper sheet

Product code example

Product code: **SSL - aaa - bbb**

type
Ød
$Ød_3$

Dimensions

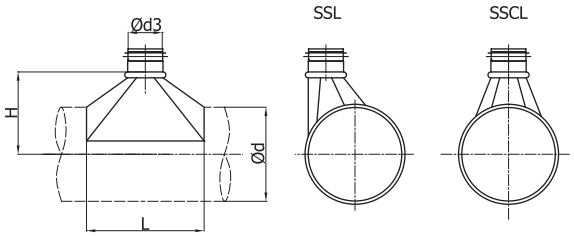

$Ød_{nom}$ (mm)	$Ød_{3\ nom}$ (mm)	L (mm)	H (mm)	Weight (kg)
160	100	190	125	0.30
	125	215	125	0.40
	140	240	130	0.40
	150	250	130	0.50
	160	260	130	0.50
	180	280	130	0.60
	200	330	145	0.70
	224	355	145	0.80
	250	380	145	0.90
180	100	190	135	0.30
	125	215	135	0.40
	140	240	140	0.45
	150	250	140	0.50
	160	260	140	0.50
	180	280	140	0.60
	200	330	155	0.70
	224	355	155	0.80
	250	380	155	0.95
	280	430	165	1.15

ALNOR® ventilation systems
is a registered trademark protected by a technical patent. All modification rights reserved.

Full-size collar saddle

SSCL/SSL/SSC/SS

Dimensions

Ød nom (mm)	Ød3 nom (mm)	L (mm)	H (mm)	Weight (kg)
200	100	190	145	0.33
	125	215	145	0.40
	140	240	150	0.50
	150	250	150	0.50
	160	260	150	0.55
	180	280	150	0.60
	200	330	165	0.70
	224	355	165	0.80
	250	380	165	1.00
	280	430	175	1.20
	300	450	175	1.25
	315	465	175	1.30
224	100	190	160	0.35
	125	215	160	0.40
	140	240	165	0.50
	150	250	165	0.50
	160	260	165	0.65
	180	280	165	0.70
	200	330	180	0.80
	224	355	180	0.85
	250	380	180	1.00
	280	430	190	1.20
	300	450	190	1.30
	315	465	190	1.40
	355	525	200	2.00
250	100	190	170	0.35
	125	215	170	0.40
	140	240	175	0.50
	150	250	175	0.50
	160	260	175	0.60
	180	280	175	0.65
	200	330	190	0.80
	224	355	190	0.90
	250	380	190	1.00
	280	430	200	1.20
	300	450	200	1.30
	315	465	200	1.35
	355	525	210	2.00
	400	570	210	2.40

Ød nom (mm)	Ød3 nom (mm)	L (mm)	H (mm)	Weight (kg)
280	100	190	185	0.40
	125	215	185	0.40
	140	240	190	0.50
	100	190	185	0.40
	125	215	185	0.40
	140	240	190	0.50
	150	250	190	0.55
	160	260	190	0.60
	180	280	190	0.75
	200	330	205	0.80
	224	355	205	0.90
	250	380	205	1.00
	280	430	215	1.30
	300	450	215	1.30
	315	465	215	1.40
	355	525	225	2.00
	400	570	225	2.40
	450	620	225	3.40
300	100	190	195	0.40
	125	215	195	0.45
	140	240	200	0.50
	150	250	200	0.55
	160	260	200	0.60
	180	280	200	0.65
	200	330	215	0.80
	224	355	215	0.90
	250	380	215	1.10
	280	430	225	1.25
	300	450	225	1.40
	315	465	225	1.40
	355	525	235	2.10
	400	570	235	2.50
	450	620	235	3.50

ALNOR® ventilation systems
is a registered trademark protected by a technical patent. All modification rights reserved.

Full-size collar saddle

SSCL/SSL/SSC/SS

Dimensions

Ød nom (mm)	Ød3 nom (mm)	L (mm)	H (mm)	Weight (kg)
315	100	190	205	0.40
	125	215	205	0.50
	140	240	210	0.55
	150	250	210	0.60
	160	260	210	0.60
	180	280	210	0.70
	200	330	225	0.85
	224	355	225	0.95
	250	380	225	1.10
	280	430	235	1.30
	300	450	235	1.40
	315	465	235	1.50
	355	525	245	2.10
	400	570	245	2.50
	450	620	245	3.60
	500	680	250	4.10
355	100	190	225	0.40
	125	215	225	0.50
	140	240	230	0.55
	150	250	230	0.60
	160	260	230	0.60
	180	280	230	0.70
	200	330	245	0.90
	224	355	245	1.00
	250	380	245	1.10
	280	430	245	1.30
	300	450	255	1.50
	315	465	255	1.60
	355	525	265	2.20
	400	570	265	2.60
	450	620	265	3.60
	500	680	270	4.20
	560	740	270	4.80

Ød nom (mm)	Ød3 nom (mm)	L (mm)	H (mm)	Weight (kg)
400	100	190	245	0.40
	125	215	245	0.50
	140	240	250	0.60
	150	250	250	0.60
	160	260	250	0.65
	180	280	250	0.70
	200	330	265	0.90
	224	355	265	1.00
	250	380	265	1.10
	280	430	275	1.40
	300	450	275	1.50
	315	465	275	1.55
	355	525	285	2.30
	400	570	285	2.70
	450	620	285	3.80
	500	680	290	4.30
	560	740	290	5.00
	600	780	290	5.40
	630	810	290	5.70
450	140	240	275	0.60
	150	250	275	0.60
	160	260	275	0.65
	180	280	275	0.70
	200	330	290	0.90
	224	355	290	1.00
	250	380	290	1.20
	280	430	300	1.40
	300	450	300	1.50
	315	465	300	1.60
	355	525	310	2.30
	400	570	310	2.70
	450	620	310	3.80
	500	680	315	4.50
	560	740	315	5.00
	600	780	315	5.50
	630	810	315	5.80
	710	890	315	8.60

ALNOR® ventilation systems
is a registered trademark protected by a technical patent. All modification rights reserved.

Full-size collar saddle

SSCL/SSL/SSC/SS

Dimensions

Ød nom (mm)	Ød3 nom (mm)	L (mm)	H (mm)	Weight (kg)
560	200	330	345	0.90
	224	355	345	1.00
	250	380	345	1.20
	280	430	355	1.50
	300	450	355	1.60
	315	465	355	1.70
	355	525	365	2.50
	400	570	365	2.80
	450	620	365	4.00
	500	680	370	4.60
	560	740	370	5.30
	600	780	370	5.7
	630	810	370	6.1
	710	890	370	8.9
	800	980	370	10.3
	900	1080	370	12.0
600	200	330	365	1.0
	224	355	365	1.1
	250	380	365	1.3
	280	430	375	1.5
	300	450	375	1.6
	315	465	375	1.7
	355	525	385	2.5
	400	570	385	2.9
	450	620	385	4.1
	500	680	390	4.7
	560	740	390	5.4
	600	780	390	5.8
	630	810	390	6.2
	710	890	390	9.0
	800	980	390	10.5
	900	1080	390	12.2

Ød nom (mm)	Ød3 nom (mm)	L (mm)	H (mm)	Weight (kg)
630	200	330	380	1.0
	224	355	380	1.1
	250	380	380	1.3
	280	430	390	1.6
	300	450	390	1.7
	315	465	390	1.7
	355	525	400	2.5
	400	570	400	2.9
	450	620	400	4.2
	500	680	405	4.8
	600	780	405	5.9
	630	810	405	6.3
	710	890	405	9.2
	800	980	405	10.6
	900	1080	405	12.3
	1000	1180	405	14.5
710	250	380	420	1.3
	280	430	420	1.5
	300	450	430	1.7
	315	465	430	1.8
	355	525	440	2.6
	400	570	440	3.0
	450	620	440	4.3
	500	680	445	4.9
	560	740	445	5.6
	600	780	445	6.0
	630	810	445	6.4
	710	890	445	9.4
	800	980	445	10.8
	900	1080	445	12.6
	1000	1180	445	14.8
	1120	1300	445	19.1

ALNOR® ventilation systems
is a registered trademark protected by a technical patent. All modification rights reserved.

Full-size collar saddle

SSCL/SSL/SSC/SS

Dimensions

Ød nom (mm)	Ød3 nom (mm)	L (mm)	H (mm)	Weight (kg)
800	250	380	465	1.4
	280	430	475	1.5
	300	450	475	1.8
	315	465	475	1.8
	355	525	485	2.7
	400	570	485	3.1
	450	620	485	4.4
	500	680	490	5.0
	560	740	490	5.7
	600	780	490	6.2
	630	810	490	6.6
	710	890	490	9.6
	800	980	490	11.1
	900	1080	490	12.9
	1000	1180	490	15.1
	1120	1300	490	19.6
	1250	1430	490	22.7
900	315	465	525	1.9
	355	525	535	2.4
	400	570	535	3.2
	450	620	535	4.5
	500	680	540	5.2
	560	740	540	5.9
	600	780	540	6.4
	630	810	540	6.7
	710	890	540	9.8
	800	980	540	11.4
	900	1080	540	13.2
	1000	1180	540	15.5
	1120	1300	540	20.0
	1250	1430	540	23.2
1000	315	465	575	2.0
	355	525	585	2.8
	400	570	585	3.3
	450	620	585	4.7
	500	680	590	5.8
	560	740	590	6.0
	600	780	590	6.5
	630	810	590	6.9
	710	890	590	10.0
	800	980	590	11.6
	900	1080	590	13.5
	1000	1180	590	15.8
	1120	1300	590	20.4
	1250	1430	590	23.7

Ød nom (mm)	Ød3 nom (mm)	L (mm)	H (mm)	Weight (kg)
1120	500	680	650	5.5
	560	740	650	6.2
	600	780	650	6.7
	630	810	650	7.0
	710	890	650	10.3
	800	980	650	11.9
	900	1080	650	13.7
	1000	1180	650	16.1
	1120	1300	650	20.8
	1250	1430	650	24.2
1250	500	680	715	5.6
	560	740	715	6.4
	600	780	715	6.9
	630	810	715	7.3
	710	890	715	10.5
	800	980	715	12.1
	900	1080	715	14.0
	1000	1180	715	16.4
	1120	1300	715	21.2
	1250	1430	715	24.5
	1400	1580	715	28.7
	1500	1680	715	31.6
	1600	1780	715	34.7
1400	600	780	790	7.0
	630	810	790	7.4
	710	890	790	10.7
	800	980	790	12.3
	900	1080	790	14.3
	1000	1180	790	16.7
	1120	1300	790	21.5
	1250	1430	790	25.0
	1400	1600	790	29.3
	1500	1680	790	32.3
	1600	1800	790	35.4

ALNOR® ventilation systems
is a registered trademark protected by a technical patent. All modification rights reserved.

Full-size collar saddle

SSCL/SSL/SSC/SS

Dimensions

$Ød_{nom}$ (mm)	$Ød_{3\ nom}$ (mm)	L (mm)	H (mm)	Weight (kg)
1500	630	810	880	7.5
	710	890	880	10.8
	800	980	880	12.5
	900	1080	880	14.5
	1000	1180	880	16.9
	1120	1300	880	21.8
	1250	1430	880	25.3
	1400	1600	880	29.6
	1500	1680	880	32.6
	1600	1800	880	35.9
1600	710	890	985	11.0
	800	980	985	12.6
	900	1080	985	14.6
	1000	1180	985	17.0
	1120	1300	985	22.1
	1250	1430	985	25.6
	1400	1600	985	29.9
	1500	1680	985	33.0
	1600	1800	985	36.2

ALNOR® ventilation systems
is a registered trademark protected by a technical patent. All modification rights reserved.

Segmented saddles for round ventilation ducts

SSCCB



Description

SSCCB segmented collar saddles allow fabricating round duct branches at the ductwork points that can only be defined when the main ventilation ducts have been installed. The collar saddle is installed by cutting an opening to match in round spiral or plain duct and fastening the piece with rivets or self-drilling screws. The joint edges need to be sealed with a silicone or acrylic compound. The saddle's form improves the air flow compared to standard collar saddles.

Available materials — Product code example

SSCCB-... -... – galvanized steel sheet
SSCCB-K-.. -... — 1.4301/304 stainless steel sheet
SSCCB-K-.. -...-316L — 1.4404/316L stainless steel sheet, molybdenum-enriched
SSCCB-A-... -... — AW-1050A H24 aluminium sheet
SSCCB-CU-... -... — M1E z4 copper sheet

Product code example

Product code: **SSCCB - aaa - bbb**

type
Ød
Ød$_1$

Dimensions

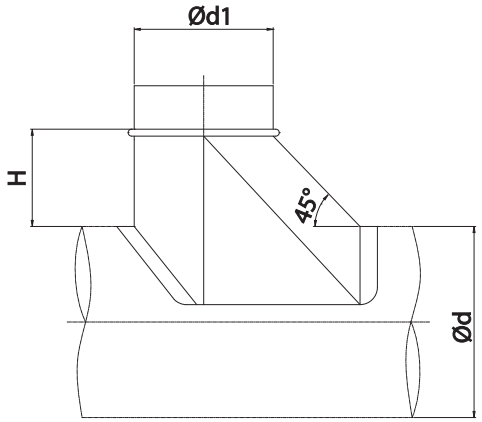

Ød $_{nom}$ (mm)	Ød$_{1\ nom}$ (mm)	H (mm)
100	80	60
	100	60
125	80	60
	100	60
	125	65
150	80	60
	100	60
	125	60
	150	70
160	80	60
	100	60
	125	65
	150	70
	160	70
200	80	60
	100	60
	125	65
	150	70
	160	70
	200	80
250	80	60
	100	60
	125	65
	150	70
	160	70
	200	80

ALNOR® ventilation systems
is a registered trademark protected by a technical patent. All modification rights reserved.

Segmented saddles for round ventilation ducts

SSCCB

Dimensions

Ød $_{nom}$ (mm)	Ød$_{1\ nom}$ (mm)	H (mm)
300	80	60
	100	60
	125	65
	150	70
	160	70
	200	80
	250	80
	300	80
315	80	60
	100	60
	125	65
	150	70
	160	70
	200	80
	250	80
	300	80
	315	90
355	80	60
	100	60
	125	65
	150	70
	160	70
	200	80
	250	80
	300	80
	315	90
	355	90
400	80	60
	100	60
	125	65
	150	70
	160	70
	200	80
	250	80
	300	80
	315	90
	355	90
	400	90

Ød $_{nom}$ (mm)	Ød$_{1\ nom}$ (mm)	H (mm)
450	80	60
	100	60
	125	60
	150	70
	160	70
	200	80
	250	80
	300	80
	315	90
	355	90
	400	90
	450	100
500	80	60
	100	60
	125	65
	150	70
	160	70
	200	80
	250	80
	300	80
	315	90
	355	90
	400	100
	500	100
630	80	60
	100	60
	125	65
	150	70
	160	70
	200	80
	250	80
	300	80
	315	90
	355	90
	400	100
	500	100
	630	100

ALNOR® ventilation systems
is a registered trademark protected by a technical patent. All modification rights reserved.

Segmented collar saddle for round ventilation duct

SSCCBL



Description

SSCCBL segmented collar saddles allow fabricating round duct branches at the ductwork points that can only be defined when the main ventilation ducts have been installed. The collar saddle is installed by cutting an opening to match in round spiral or plain duct and fastening the piece with rivets or self-drilling screws. The joint edges need to be sealed with a silicone or acrylic compound. The saddle's form improves the air flow compared to standard collar saddles. This product is specifically recommended for branching systems that require air tightness class D according to EN 12237.

Available materials — Product code example

SSCCBL-... -... – galvanized steel sheet
SSCCBL-K-.. -... — 1.4301/304 stainless steel sheet
SSCCBL-K-.. -...-316L — 1.4404/316L stainless steel sheet, molybdenum-enriched
SSCCBL-A-... -... — AW-1050A H24 aluminium sheet
SSCCBL-CU-... -... — M1E z4 copper sheet

Product code example

Product code: **SSCCBL - aaa - bbb**

type
Ød
Ød$_1$

Dimensions

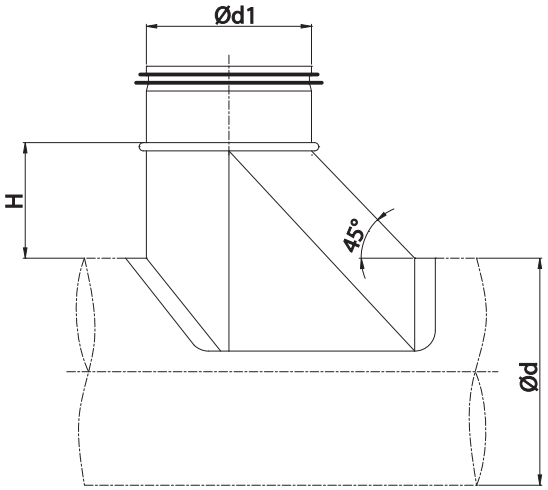

Ød $_{nom}$ (mm)	Ød$_{1\ nom}$ (mm)	H (mm)
100	80	60
	100	60
125	80	60
	100	60
	125	65
150	80	60
	100	60
	125	60
	150	70
160	80	60
	100	60
	125	65
	150	70
	160	70
200	80	60
	100	60
	125	65
	150	70
	160	70
	200	80
250	80	60
	100	60
	125	65
	150	70
	160	70
	200	80

ALNOR® ventilation systems
is a registered trademark protected by a technical patent. All modification rights reserved.

Segmented collar saddle for round ventilation duct

SSCCBL

Dimensions

Ød $_{nom}$ (mm)	Ød$_{1\ nom}$ (mm)	H (mm)
300	80	60
	100	60
	125	65
	150	70
	160	70
	200	80
	250	80
	300	80
315	80	60
	100	60
	125	65
	150	70
	160	70
	200	80
	250	80
	300	80
	315	90
355	80	60
	100	60
	125	65
	150	70
	160	70
	200	80
	250	80
	300	80
	315	90
	355	90
400	80	60
	100	60
	125	65
	150	70
	160	70
	200	80
	250	80
	300	80
	315	90
	355	90
	400	90

Ød $_{nom}$ (mm)	Ød$_{1\ nom}$ (mm)	H (mm)
450	80	60
	100	60
	125	60
	150	70
	160	70
	200	80
	250	80
	300	80
	315	90
	355	90
	400	90
	450	100
500	80	60
	100	60
	125	65
	150	70
	160	70
	200	80
	250	80
	300	80
	315	90
	355	90
	400	100
	500	100
630	80	60
	100	60
	125	65
	150	70
	160	70
	200	80
	250	80
	300	80
	315	90
	355	90
	400	100
	500	100
	630	100

ALNOR® ventilation systems
is a registered trademark protected by a technical patent. All modification rights reserved.

Collar saddles for rectangular ducts

SSCFB



Description

Segmented collar saddles allow fabricating round branch ducts from rectangular ventilation ducts. The installation requires cutting and opening in the duct being branched and fastening the piece with rivets or screws. The joint needs to be sealed with a silicone or acrylic compound. The saddle's form improves the air flow compared to standard ILS collar saddles.

Available materials — Product code example

SSCFB-...	– galvanized steel sheet
SSCFB-K-...	— 1.4301/304 stainless steel sheet
SSCFB-K-.. -316L	— 1.4404/316L stainless steel sheet, molybdenum-enriched
SSCFB-A-...	— AW-1050A H24 aluminium sheet
SSCFB-CU-...	— M1E z4 copper sheet

Product code example

Product code: **SSCFB - aaa**

type
Ød

Dimensions

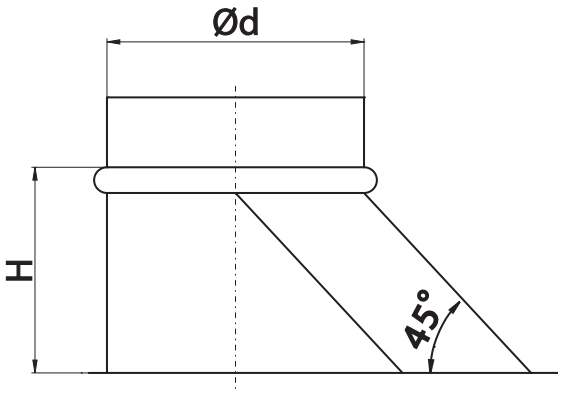

Ød (mm)	H (mm)
80	80
100	80
125	80
150	80
160	80
180	80
200	100
224	100
250	100
300	125
315	125
355	125
400	140
450	140
560	140
600	170
630	170

ALNOR® ventilation systems
is a registered trademark protected by a technical patent. All modification rights reserved.

Collar saddles with gaskets for rectangular ducts

SSCFBL



Description

Segmented collar saddles allow fabricating round branch ducts from square ventilation ducts. The installation requires cutting and opening in the duct being branched and fastening the piece with rivets or screws. The joint needs to be sealed with a silicone or acrylic compound. The saddle's form improves the air flow compared to standard ILSL collar saddles. This product is specifically recommended for branching systems that require air tightness class D according to EN 12237.

Available materials - Product code example

SSCFBL-...	- galvanized steel sheet
SSCFBL-K-..	- 1.4301/304 stainless steel sheet
SSCFBL-K-.. -316L	- 1.4404/316L stainless steel sheet, molybdenum-enriched
SSCFBL-A-...	- AW-1050A H24 aluminium sheet
SSCFBL-CU-...	- M1E z4 copper sheet

Product code example

Product code: **SSCFBL - aaa**

type

Ød$_1$

Dimensions

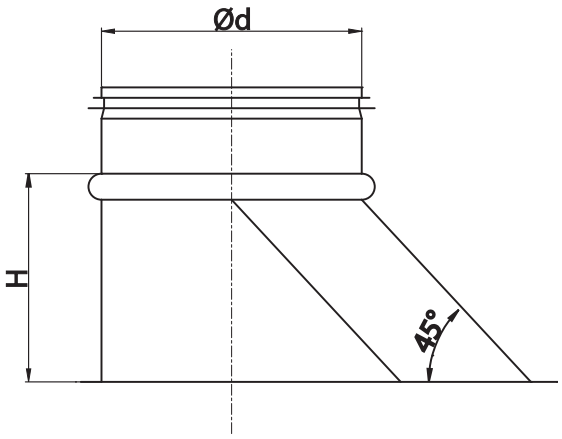

Ød (mm)	H (mm)
80	80
100	80
125	80
150	80
160	80
180	80
200	100
224	100
250	100
280	135
300	125
315	125
355	125
400	140
450	140
560	140
600	170
630	170

ALNOR® ventilation systems
is a registered trademark protected by a technical patent. All modification rights reserved.

45° collar saddles

SSCVL-45/SSCV-45



Description

Collar saddles are provided with a T-piece end leaning at 45° to the main ventilation duct. The piece can be installed on any part of a finished ventilation duct or shaft. The installation requires cutting an opening in the duct, in which the piece is fastened with rivets or screws, and sealing the joint with a silicone or acrylic compound. Collar saddles are available at any T-piece end angle from 30° to 80° for an non-turbulent, smooth air flow.

SSCVL-45 – 45° collar saddle with an EPDM gasket, air tightness class D acc. to EN 12237

SSCV-45 – 45° collar saddle without a gasket

Available materials — Product code example
SSCVL-45-... -... – galvanized steel sheet
SSCVL-45-K-.. -... — 1.4301/304 stainless steel sheet
SSCVL-45-K-.. -...-316L — 1.4404/316L stainless steel sheet, molybdenum-enriched
SSCVL-45-A-... -... — AW-1050A H24 aluminium sheet
SSCVL-45-CU-... -... — M1E z4 copper sheet

Product code example
Product code: **SSCVL/SSCV-45 - aaa - bbb**

type
Ød
$Ød_3$

Dimensions

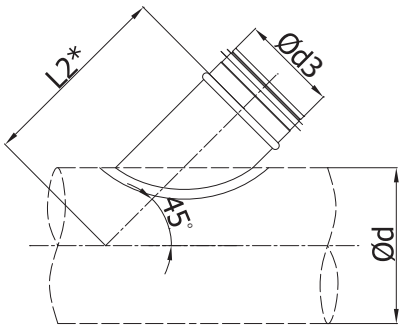

$Ød_{3\ nom}$ (mm)	Weight (kg)
80	0.2
100	0.3
125	0.5
140	0.5
150	0.6
160	0.7
180	0.8
200	1.1
224	1.3
250	1.6
280	2.0
300	2.3
315	2.6
355	3.0
400	3.5
450	4.8
500	5.5
560	6.2
600	6.9
630	9.7
710	11.6
800	13.4
900	15.5
1000	17.6
1120	20.3
1250	24.0

*Dimension L_2 for the TSVL as shown in Table on pp. 114-116

ALNOR® ventilation systems
is a registered trademark protected by a technical patent. All modification rights reserved.

T-pieces and X-pieces with gaskets

TPCL/XPCL



Description

Ventilation T-pieces and X-pieces are available in several types and forms, depending on the size, diameter and standard or custom dimensioning. T-pieces and X-pieces are straight pieces of ductwork, provided with 90-degree branches, equal to or smaller than the main duct size. The pieces feature a neat finish with seam welds that require no additional sealing to maintain air tightness class D according to EN 12237 for an added value.

TPCL – full-bore T-piece with an EPDM gasket
XPCL – full-bore four-way piece with an EPDM gasket

The table contains numbers for the versions described below:
1. T-piece fabricated with an SPL collar saddle, fastened to the duct with rivets and caulked at the joints.
3. T-piece fabricated with an SPP full-size collar saddle, fastened to the bottom part with seam welds, requires no additional sealing.
4. T-piece fabricated with the SPSL short segmented collar saddle, designed for non-standard duct sizes and branches sized above 400 mm.

Available materials — Product code example

TPCL-... -... -...	– galvanized steel sheet
TPCL-K-.. -...-...	— 1.4301/304 stainless steel sheet
TPCL-K-.. -...-...-316L	— 1.4404/316L stainless steel sheet, molybdenum-enriched
TPCL-A-...-...-...	— AW-1050A H24 aluminium sheet
TPCL-CU-...-...-...	— M1E z4 copper sheet

Product code example

Product code: **XPCL - aaa -bbb - ccc**

type
Ød$_1$
Ød$_3$
Ød$_4$

Dimensions

TPCL

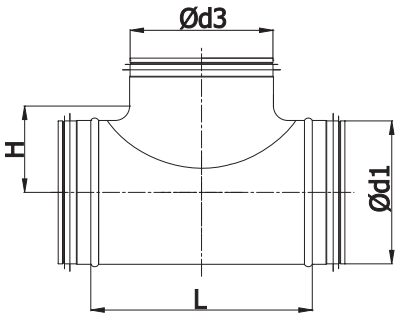

XPCL

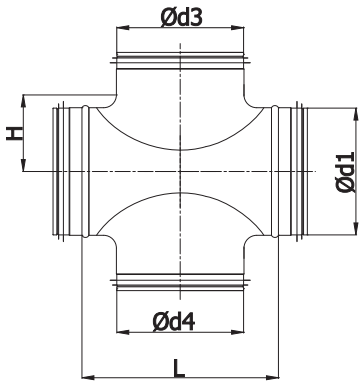

Versions

Version 1



Version 3



Version 4



ALNOR® ventilation systems
is a registered trademark protected by a technical patent. All modification rights reserved.

T-pieces and X-pieces with gaskets

TPCL/XPCL

Dimensions

Ød$_1$ (mm)	Ød$_3$ / Ød$_4$ (mm)	L (mm)	H (mm)	Weight (kg)	
				TPCL	XPCL
80	80[1]	140	52	0.30	0.40
100	80[3]	126	65	0.33	0.45
	100[1]	170	65	0.45	0.56
125	80[3]	146	75	0.40	0.50
	100[3]	184	78	0.50	0.73
	125[1]	200	83	0.63	0.86
140	80[1]	140	82	0.43	0.53
	100[1]	175	85	0.60	0.76
	125[1]	230	90	0.70	1.00
150	80[1]	140	87	0.45	0.56
	100[3]	175	90	0.64	0.78
	125[3]	215	95	0.74	1.00
	140[4]	230	95	0.75	1.04
	150[1]	260	95	0.75	1.05
160	80[1]	140	92	0.50	0.62
	100[3]	184	95	0.63	0.84
	125[3]	155	100	0.75	1.07
	140[4]	230	100	0.75	1.10
	150[4]	260	100	0.77	1.12
	160[1]	229	105	0.85	1.20
180	80[1]	140	102	0.66	0.70
	100[1]	175	105	0.78	0.90
	125[1]	215	110	0.85	1.12
	140[4]	230	110	0.90	1.17
	150[4]	260	110	0.98	1.20
	160[1]	260	115	1.00	1.30
200	80[1]	180	112	0.73	0.75
	100[1]	175	115	0.85	0.95
	125[3]	155	115	0.93	1.20
	140[4]	230	120	0.94	1.27
	150[3]	260	120	0.96	1.30
	160[3]	281	125	1.05	1.48
	180[4]	285	125	1.20	1.70
	200[1]	265	125	1.28	1.73

Ød$_1$ (mm)	Ød$_3$ / Ød$_4$ (mm)	L (mm)	H (mm)	Weight (kg)	
				TPCL	XPCL
224	80[1]	140	124	0.75	0.85
	100[1]	175	127	0.88	1.03
	125[1]	215	132	1.06	1.30
	140[4]	230	132	1.16	1.37
	150[4]	260	132	1.16	1.40
	160[1]	260	137	1.25	1.50
	180[4]	285	137	1.40	1.90
	200[1]	346	137	1.53	1.95
	224[4]	346	137	1.65	2.10
250	80[1]	156	137	0.93	1.00
	100[3]	175	140	1.07	1.20
	125[3]	220	145	1.20	1.30
	140[4]	230	145	1.38	1.55
	150[3]	255	145	1.38	1.60
	160[3]	256	150	1.46	1.75
	180[4]	306	150	1.70	2.00
	200[3]	306	150	1.72	2.10
	224[4]	350	150	1.95	2.30
	250[1]	307	150	2.00	2.60
280	80[4]	156	152	1.05	1.20
	100[4]	175	155	1.15	1.40
	125[1]	220	160	1.32	1.43
	140[4]	230	160	1.50	1.72
	150[4]	255	160	1.52	1.78
	160[4]	256	165	1.60	1.85
	180[4]	306	165	1.80	2.25
	200[1]	306	165	1.86	2.30
	224[4]	350	165	2.05	2.40
300	80[4]	156	162	1.20	1.35
	100[4]	175	165	1.25	1.42
	125[1]	220	170	1.40	1.52
	140[4]	230	170	1.60	1.80
	150[4]	255	170	1.60	1.82
	160[4]	256	175	1.62	2.00
	180[4]	306	175	1.96	2.35
	200[1]	306	175	1.98	2.40
	224[4]	350	175	2.05	2.52
	250[1]	350	175	2.20	2.63

ALNOR® ventilation systems
is a registered trademark protected by a technical patent. All modification rights reserved.

T-pieces and X-pieces with gaskets

TPCL/XPCL

Dimensions

Ød$_1$ (mm)	Ød$_3$ / Ød$_4$ (mm)	L (mm)	H (mm)	Weight (kg)	
				TPCL	XPCL
315	80[4]	156	170	1.25	1.40
	100[4]	175	173	1.30	1.45
	125[1]	220	178	1.46	1.60
	140[4]	230	178	1.65	1.86
	150[4]	250	178	1.68	1.90
	160[4]	256	182	1.70	2.00
	180[4]	306	182	2.05	2.40
	200[1]	306	182	2.08	2.45
	224[4]	350	182	2.20	2.80
	250[1]	350	182	2.30	2.90
	315[1]	390	182	2.80	3.70
355	100[4]	175	193	1.70	1.85
	125[4]	220	198	1.90	2.00
	160[4]	256	203	2.15	2.30
	200[4]	306	203	2.55	2.80
	224[4]	350	203	2.82	3.15
	250[4]	350	203	2.90	3.20
	315[4]	455	203	3.40	4.30
400	100[4]	175	215	2.15	2.20
	125[4]	225	220	2.40	2.50
	160[4]	266	225	2.70	2.90
	200[4]	300	225	3.00	3.30
	224[4]	350	225	3.40	3.70
	250[4]	350	225	3.50	3.80
	315[4]	415	225	3.95	4.50
	400[4]	500	225	5.00	6.00
450	125[4]	225	245	3.30	3.40
	160[4]	266	250	3.70	3.80
	200[4]	300	250	4.10	4.30
	250[4]	350	250	4.50	4.90
	315[4]	415	250	6.10	5.40
	400[4]	500	250	6.20	6.90
500	125[4]	225	270	3.80	3.70
	160[4]	266	275	4.10	4.20
	200[4]	300	275	4.50	4.70
	250[4]	350	275	5.0	5.4
	315[4]	415	275	5.6	6.0
	400[4]	500	275	6.9	7.7

Ød$_1$ (mm)	Ød$_3$ / Ød$_4$ (mm)	L (mm)	H (mm)	Weight (kg)	
				TPCL	XPCL
560	200[4]	360	305	5.6	5.8
	250[4]	400	305	5.1	6.4
	315[4]	485	305	6.9	7.3
	400[4]	590	305	8.6	9.4
600	200[4]	360	325	6.0	6.3
	250[4]	400	325	6.3	6.5
	315[4]	485	325	7.5	7.8
	400[4]	590	325	9.2	9.9
630	200[4]	360	340	6.3	6.1
	250[4]	400	340	6.7	6.8
	315[4]	485	340	8.0	8.3
	400[4]	590	340	9.5	10.4
710	160[4]	430	415	5.5	6.0
	200[4]	470	415	6.0	6.3
	250[4]	520	415	6.6	6.7
	315[4]	585	435	7.5	8.0
	400[4]	670	435	8.5	9.6
	450[4]	720	475	9.4	10.9
800	160[4]	430	460	6.2	6.8
	200[4]	470	460	6.8	7.5
	250[4]	520	460	7.4	8.0
	315[4]	585	480	8.4	9.3
	400[4]	670	480	9.5	10.5
	450[4]	720	520	10.5	11.6
	500[4]	770	520	11.2	12.0
	560[4]	830	520	11.9	13.1

ALNOR® ventilation systems
is a registered trademark protected by a technical patent. All modification rights reserved.

T-pieces and X-pieces

TPC/XPC



Description

Ventilation T-pieces and X-pieces are available in several types and forms, depending on the size, diameter and standard or custom dimensioning. All pieces are full-bore and provided with 90-degree branches, equal to or smaller than the main duct size. Seam welds provide a neat finish and require no additional sealing.

TPC – full-bore T-piece
XPC – full-bore four-way piece

1. T-piece fabricated with an SPL collar saddle, fastened to the duct with rivets and caulked at the joints.

3. T-piece fabricated with a full-size collar saddle SPP, fastened to the bottom part with seam welds, requires no additional sealing.

4. T-piece fabricated with a SPS short segmented collar saddle, designed for non-standard duct sizes and branches sized above 400 mm.

Available materials - Product code example

TPC-... -... -...	- galvanized steel sheet
TPC-K-.. -...-...	- 1.4301/304 stainless steel sheet
TPC-K-.. -...-...-316L	- 1.4404/316L stainless steel sheet, molybdenum-enriched
TPC-A-...-...-...	- AW-1050A H24 aluminium sheet
TPC-CU-...-...-...	- M1E z4 copper sheet

Product code example

Product code: **TPC/XPC- aaa - bbb - ccc**

type
Ød$_1$
Ød$_3$
Ød$_4$

Dimensions

TPC

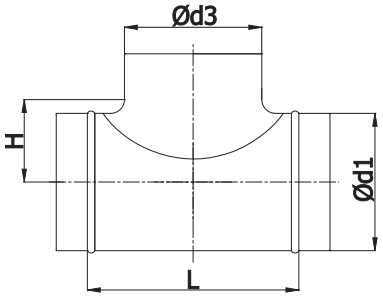

XPC

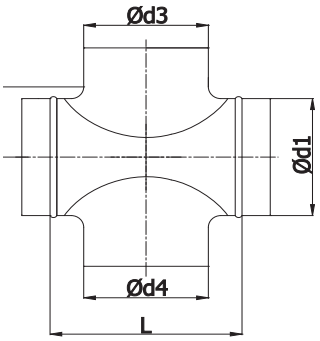

Versions

Version 1





Version 3


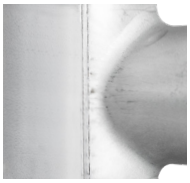
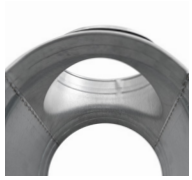

Version 4


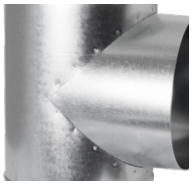


ALNOR® ventilation systems
is a registered trademark protected by a technical patent. All modification rights reserved.

TPC/XPC

Dimensions

Ød$_1$ (mm)	Ød$_3$ / Ød$_4$ (mm)	L (mm)	H (mm)	Weight (kg)	
				TPC	XPC
80	80[1]	140	52	0.25	0.35
100	80[1]	126	65	0.30	0.50
	100[2]	151	65	0.40	0.60
125	80[3]	146	75	0.36	0.50
	100[1]	184	78	0.46	0.70
	125[1]	184	83	0.58	0.85
140	80[1]	140	82	0.38	0.50
	100[1]	175	85	0.50	0.74
	125[1]	230	90	0.65	0.96
150	80[1]	140	87	0.42	0.52
	100[1]	175	90	0.55	0.75
	125[1]	215	95	0.68	0.98
	140[4]	230	95	0.70	0.99
	150[1]	260	95	0.70	1.02
160	80[1]	140	92	0.44	0.56
	100[1]	184	95	0.55	0.82
	125[1]	155	100	0.68	1.05
	140[4]	230	100	0.75	1.07
	150[4]	260	100	0.75	1.09
	160[1]	229	105	0.80	1.15
180	80[1]	140	102	0.50	0.60
	100[1]	175	105	0.65	0.85
	125[1]	215	110	0.77	1.08
	140[4]	230	110	0.80	1.10
	150[4]	260	110	0.80	1.12
	160[1]	260	115	0.92	1.14
	180[4]	285	115	1.06	1.45
200	80[1]	180	112	0.55	0.66
	100[1]	175	115	0.65	0.92
	125[1]	155	115	0.79	1.17
	140[4]	230	120	0.83	1.20
	150[1]	260	120	0.88	1.23
	160[1]	281	125	0.95	1.45
	180[4]	285	125	1.15	1.64
	200[1]	281	125	1.25	1.70

Ød$_1$ (mm)	Ød$_3$ / Ød$_4$ (mm)	L (mm)	H (mm)	Weight (kg)	
				TPC	XPC
224	80[1]	140	124	0.60	0.70
	100[1]	175	127	0.78	0.98
	125[1]	215	132	0.90	1.15
	140[4]	230	132	0.98	1.34
	150[4]	260	132	0.98	1.36
	160[1]	260	137	1.00	1.55
	180[4]	285	137	1.20	1.74
	200[1]	346	137	1.25	1.83
	224[4]	346	137	1.46	2.06
250	80[1]	156	137	0.73	0.96
	100[1]	175	140	0.83	1.17
	125[1]	220	145	0.90	1.27
	140[4]	230	145	1.12	1.50
	150[1]	255	145	1.12	1.53
	160[1]	256	150	1.19	1.70
	180[4]	306	150	1.40	2.00
	200[1]	306	150	1.40	2.05
	224[4]	350	150	1.60	2.40
	250[1]	307	150	1.77	2.50
280	80[4]	156	152	0.80	1.15
	100[4]	175	155	0.93	1.27
	125[1]	220	160	1.05	1.40
	140[4]	230	160	1.20	1.68
	150[4]	255	160	1.20	1.70
	160[4]	256	165	1.28	1.84
	180[4]	306	165	1.45	2.00
	200[1]	306	165	1.50	2.05
	224[4]	350	165	1.64	2.35
300	80[4]	156	162	0.90	1.40
	100[4]	175	165	1.00	1.42
	125[1]	220	170	1.07	1.50
	140[4]	230	170	1.25	1.77
	150[4]	255	170	1.25	1.80
	160[4]	256	175	1.35	1.98
	180[4]	306	175	1.55	2.15
	200[1]	306	175	1.58	2.20
	224[4]	350	175	1.73	2.46
	250[1]	350	175	1.94	2.60

ALNOR® ventilation systems
is a registered trademark protected by a technical patent. All modification rights reserved.

T-pieces and X-pieces

TPC/XPC

Dimensions

Ød$_1$ (mm)	Ød$_3$ / Ød$_4$ (mm)	L (mm)	H (mm)	Weight (kg)	
				TPC	XPC
315	80[4]	156	170	1.00	1.41
	100[4]	175	173	1.02	1.43
	125[1]	220	178	1.10	1.53
	140[4]	230	178	1.35	1.62
	150[4]	250	178	1.35	1.65
	160[4]	256	182	1.35	2.00
	180[4]	306	182	1.62	2.22
	200[1]	306	182	1.65	2.26
	224[4]	350	182	1.80	2.55
	250[1]	350	182	1.95	2.67
	315[1]	390	182	2.80	3.66
355	100[4]	175	193	1.32	2.00
	125[4]	220	198	1.45	2.10
	160[4]	256	203	1.70	2.25
	200[4]	306	203	2.10	2.75
	224[4]	350	203	2.36	3.10
	250[4]	350	203	2.45	3.20
	315[4]	455	203	3.10	4.20
400	100[4]	175	215	1.80	2.20
	125[4]	225	220	1.90	2.40
	160[4]	266	225	2.20	2.80
	200[4]	300	225	2.60	3.20
	224[4]	350	225	2.80	3.60
	250[4]	350	225	3.00	3.75
	315[4]	415	225	3.55	4.38
	400[4]	500	225	4.60	5.90
450	125[4]	225	245	2.65	3.30
	160[4]	266	250	3.00	3.70
	200[4]	300	250	3.50	4.20
	250[4]	350	250	4.00	4.80
	315[4]	415	250	4.50	5.30
	400[4]	500	250	5.60	6.80
500	125[4]	225	270	3.00	3.80
	160[4]	266	275	3.30	4.10
	200[4]	300	275	3.80	4.60
	250	350	275	4.4	5.2
	315	415	275	5.0	5.8
	400	500	275	6.3	7.6

Ød$_1$ (mm)	Ød$_3$ / Ød$_4$ (mm)	L (mm)	H (mm)	Weight (kg)	
				TPC	XPC
560	200	360	305	4.3	5.7
	250	400	305	4.8	6.3
	315	485	305	5.6	7.2
	400	590	305	6.9	9.3
600	200	360	325	4.5	6.1
	250	400	325	4.9	6.7
	315	485	325	5.9	7.6
	400	590	325	7.3	9.8
630	200	360	340	4.8	6.4
	250	400	340	5.4	7.0
	315	485	340	6.3	8.2
	400	590	340	7.7	10.2
710	160[4]	430	415	5.5	6.0
	200[4]	470	415	6.0	6.3
	250[4]	520	415	6.6	6.7
	315[4]	585	435	7.5	8.0
	400[4]	670	435	8.5	9.6
	450[4]	720	475	9.4	10.9
800	160[4]	430	460	6.2	6.8
	200[4]	470	460	6.8	7.5
	250[4]	520	460	7.4	8.0
	315[4]	585	480	8.4	9.3
	400[4]	670	480	9.5	10.5
	450[4]	720	520	10.5	11.6
	500[4]	770	520	11.2	12.0
	560[4]	830	520	11.9	13.1

ALNOR® ventilation systems
is a registered trademark protected by a technical patent. All modification rights reserved.

T-pieces and X-pieces

TPCL/XPCL/TPC/XPC

Technical specifications

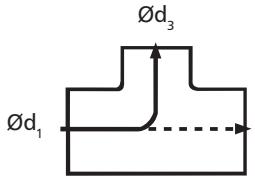

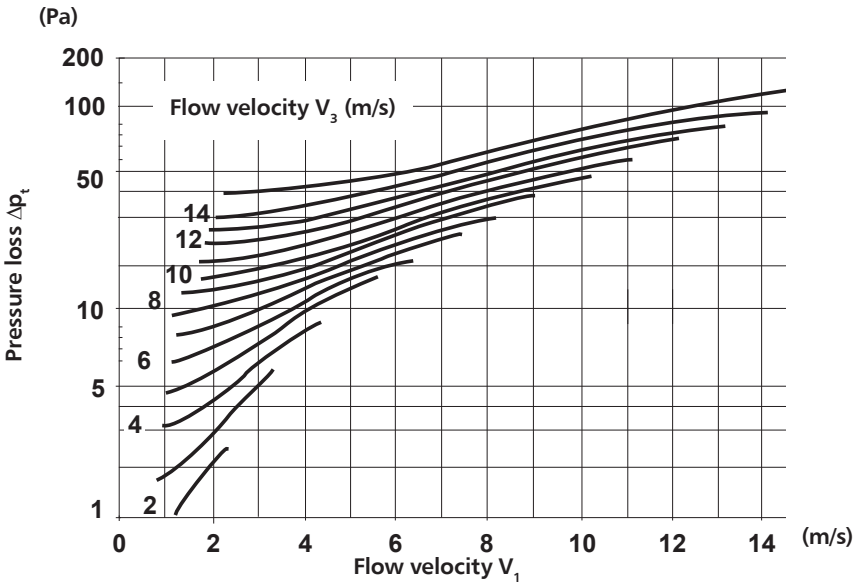

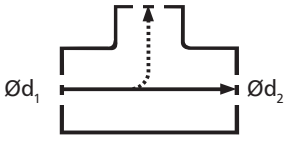

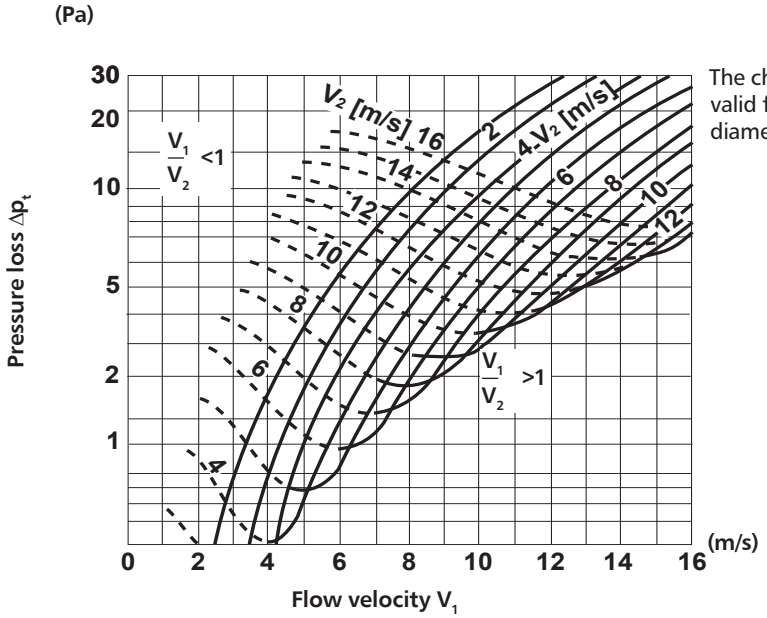

The chart is valid for a reduced diameter Ød$_2$.

V_1 – average flow velocity across d_1
V_2 – average flow velocity across d_2
V_3 – average flow velocity across d_3

ALNOR® ventilation systems
is a registered trademark protected by a technical patent. All modification rights reserved.

T-pieces and X-pieces

TPCL/XPCL/TPC/XPC

Technical specifications

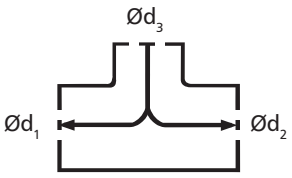

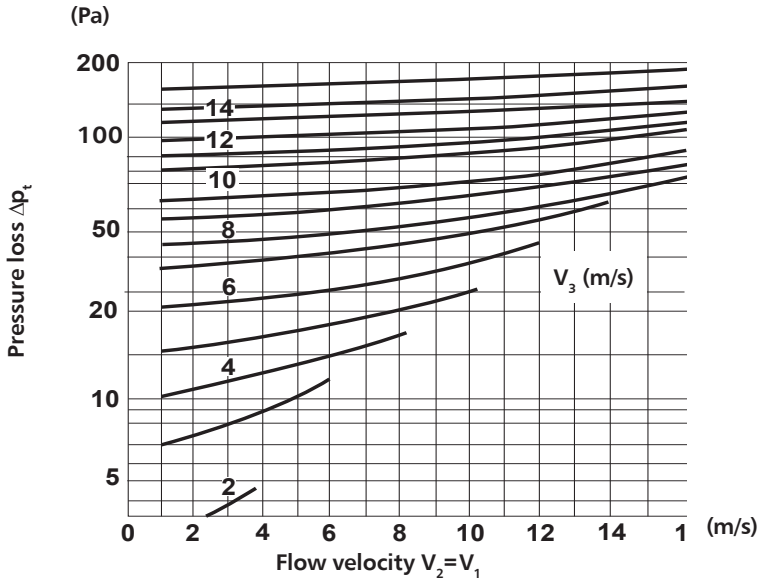

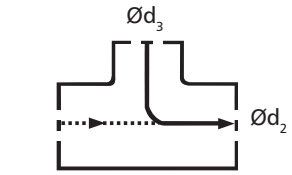

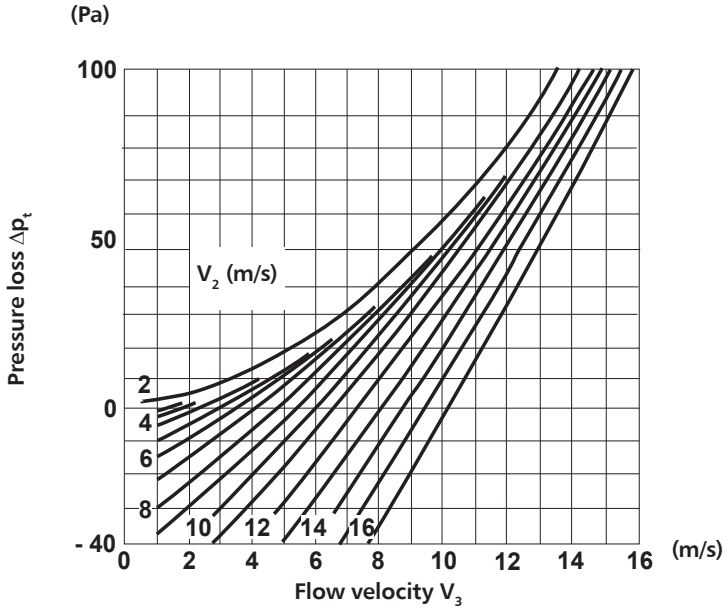

V_1 – average flow velocity across d_1
V_2 – average flow velocity across d_2
V_3 – average flow velocity across d_3

ALNOR® ventilation systems
is a registered trademark protected by a technical patent. All modification rights reserved.

TPCL/XPCL/TPC/XPC

Technical specifications

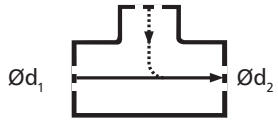

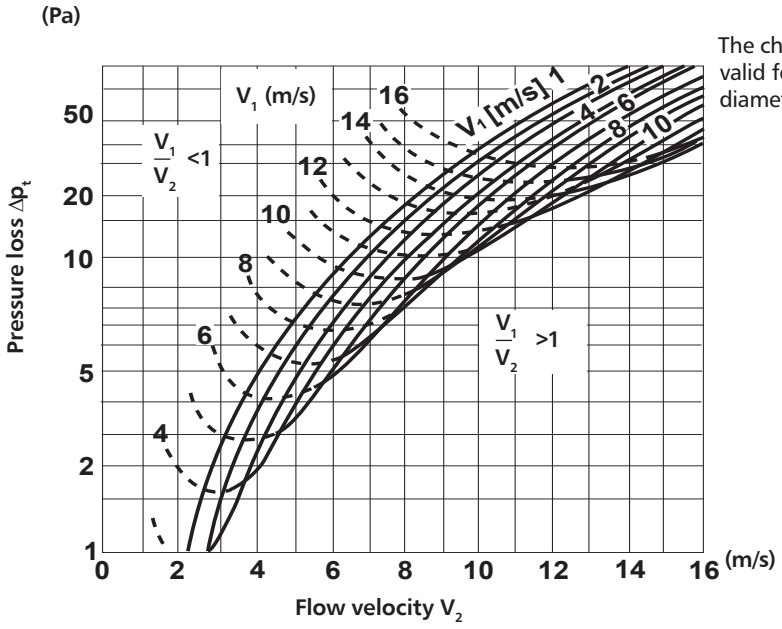

The chart is valid for a reduced diameter Ød1.

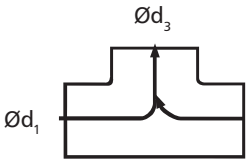

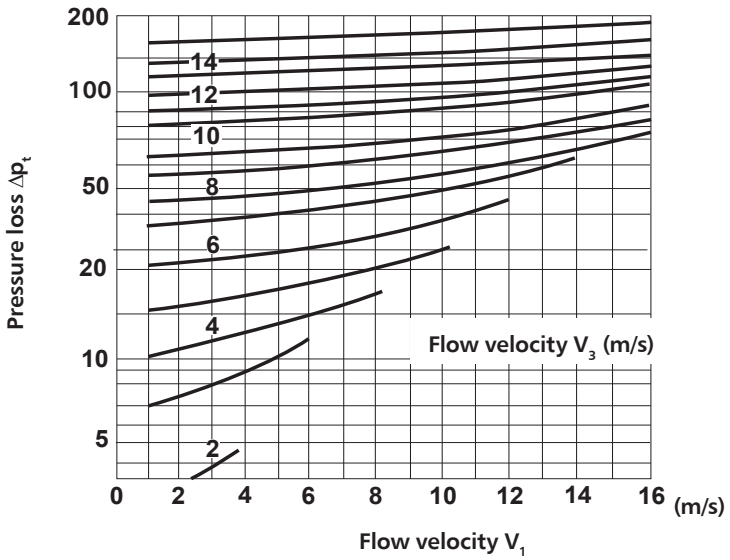

V_1 – average flow velocity across d_1
V_2 – average flow velocity across d_2
V_3 – average flow velocity across d_3

ALNOR® ventilation systems
is a registered trademark protected by a technical patent. All modification rights reserved.

Insulated reducing T-pieces with blind end cap

TPCL-CP/TPC-CP/TPCL-CP-I/TPC-CP-I



Description

The T-piece can be installed in two different parts of a ventilation system. The T-piece can be fitted at the end of the ductwork, with the small port used as a cleanout. The T-piece can also be installed at corners of the ductwork, with the small port sealed with the end cap to work as an expansion (plenum) box. The blind end cap can always be removed to access the main duct.





The insulated T-pieces are clad in sound-proofing rubber.

TPC-CP - reducing T-piece without a gasket
TPCL-CP - reducing T-piece with an EPDM rubber gasket, air tightness class D
TPC-CP-I - insulated reducing T-piece without a gasket
TPCL-CP-I - reducing T-piece without a gasket with an EPDM rubber gasket, air tightness class D

The T-piece with $d_1 \leq 315$ has the small port blinded with a CP end cap.
The T-piece with $d_1 \geq 355$ has the small port blinded with a CPF end cap.

Available materials - Product code example
TPCL-CP-... -... -... - galvanized steel sheet
TPCL-CP-K-.. -...-... - 1.4301/304 stainless steel sheet
TPCL-CP-K-.. -...-...-316L - 1.4404/316L stainless steel sheet, molybdenum-enriched

Product code example
Product code: **TPCL-CP - aaa - bbb - ccc**

type
Ød$_1$
Ød$_2$
Ød$_3$

Dimensions

TPCL-CP

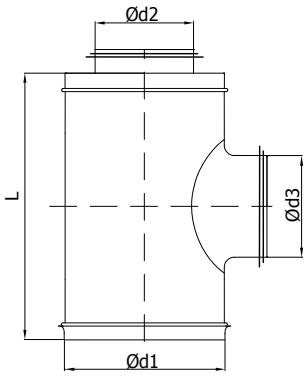

TPCL-CP-I

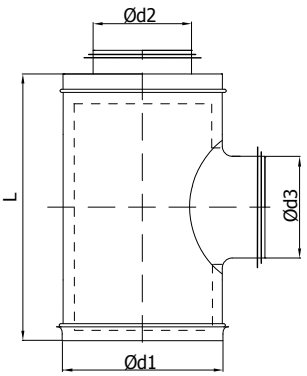

Ød$_1$ [mm]	Ød$_2$ [mm]	Ød$_3$ [mm]	L [mm]	Weight TPCL-CP [kg]	Weight TPCL-CP-I [kg]
200	125	125	263	1,26	1,35
250	160	160	288	1,85	1,92
315	200	200	358	2,53	2,60
315	250	250	358	3,55	2,77
355	250	250	410	4,00	4,15
400	315	315	570	5,64	5,85
450	355	355	492	5,78	6,03
500	355	355	684	7,68	7,83
500	400	400	821	8,96	9,32
500	450	450	944	10,12	10,53
560	400	400	985	14,10	14,66
630	450	450	1133	18,01	18,80

ALNOR® ventilation systems
is a registered trademark protected by a technical patent. All modification rights reserved.

Segmented T-pieces and X-pieces

TSCL/TSL/XSCL/XSL/TSC/TS/XSC/XS

TSCL



TSC



XSCL



XSC



Description

Segmented T-pieces and X-pieces can be fitted in large ducts in a diameter range from 630 to 1600 mm and rated at low-, medium- or high-pressure ranges. The passage form from the main pipe to the branch port at 90° allows a smooth air flow with a minimum pressure loss. The pieces can be made with offset openings or branch ports larger than the main bore for an added value of flexible duct routing design.

TSCL – symmetric T-piece with EPDM gaskets, air tightness class D acc. to EN 12237
XSCL – symmetric four-way piece with EPDM gaskets, air tightness class D acc. to EN 12237
TSC – symmetric T-piece without a gasket
XSC – symmetric four-way piece without a gasket
TSL – assymetric T-piece with EPDM gaskets, air tightness class D acc. to EN 12237
XSL – assymetric four-way piece with EPDM gaskets, air tightness class D acc. to EN 12237
TS – eccentric T-piece without a gasket
XS – assymetric four-way piece without a gasket
XSCL/XSL – d_4 may be different from d_3.
To be installed with SSCL/SSL.

Product code example
Product code: **TSCL - aaa - bbb**

type
Ød$_1$
Ød$_3$

Dimensions

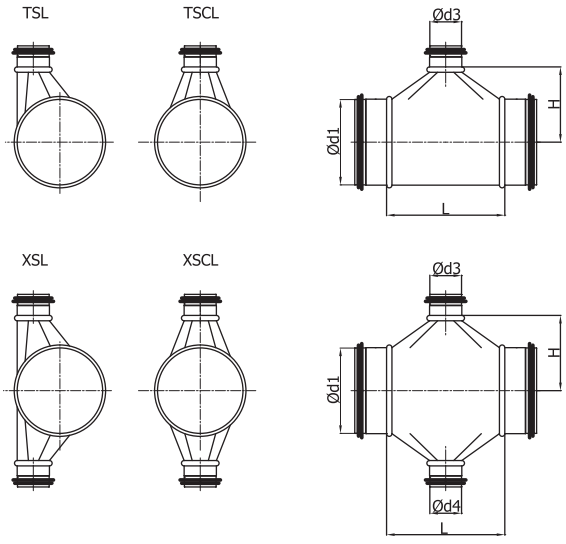

Available materials — Product code example

TSCL-... -...	– galvanized steel sheet
TSCL-K-...-...	— 1.4301/304 stainless steel sheet
TSCL-K-...-...-316L	— 1.4404/316L stainless steel sheet, molybdenum-enriched
TSCL-A-...-...	— AW-1050A H24 aluminium sheet
TSCL-CU-...-...	— M1E z4 copper sheet

ALNOR® ventilation systems
is a registered trademark protected by a technical patent. All modification rights reserved.

Segmented T-pieces and X-pieces

TSCL/TSL/XSCL/XSL/TSC/TS/XSC/XS

Dimensions

Ød$_1$ (mm)	Ød$_3$ / Ød$_4$ (mm)	L (mm)	H (mm)	Weight (kg)	
				TSCL/TSC	XSCL/XSL
160	100	190	125	0.70	0.80
	125	215	125	0.80	0.90
	140	240	130	0.85	1.00
	150	250	130	0.90	1.05
	160	260	130	0.95	1.10
	180	280	130	0.95	1.20
	200	330	145	1.15	1.50
	224	354	145	1.25	1.70
	250	380	145	1.40	2.10
180	100	190	135	0.80	0.90
	125	215	135	0.90	1.00
	140	240	140	0.95	1.10
	150	250	140	1.00	1.15
	160	260	140	1.05	1.20
	180	280	140	1.10	1.25
	200	330	155	1.25	1.60
	224	354	155	1.35	1.80
	250	380	155	1.50	2.10
	280	430	165	1.70	2.60
200	100	190	145	0.90	1.00
	125	215	145	0.95	1.10
	140	240	150	1.00	1.20
	150	250	150	1.00	1.25
	160	260	150	1.10	1.30
	180	280	150	1.15	1.40
	200	330	165	1.35	1.60
	224	354	165	1.45	1.80
	250	380	165	1.60	2.20
	280	430	175	1.80	2.60
	300	450	175	1.90	2.80
	315	465	175	2.00	2.90
224	100	196	160	1.00	1.00
	125	221	160	1.05	1.20
	140	246	165	1.15	1.30
	150	256	165	1.20	1.30
	160	266	165	1.25	1.40
	180	286	165	1.30	1.50
	200	336	180	1.50	1.70
	224	360	180	1.60	1.90
	250	386	180	1.80	2.20
	280	436	190	2.00	2.60
	300	456	190	2.10	2.90
	315	471	190	2.20	3.00
	355	531	200	2.90	4.40

Ød$_1$ (mm)	Ød$_3$ / Ød$_4$ (mm)	L (mm)	H (mm)	Weight (kg)	
				TSCL/TSC	XSCL/XSL
250	100	190	170	1.20	1.30
	125	215	170	1.30	1.40
	140	240	175	1.40	1.50
	150	250	175	1.40	1.60
	160	260	175	1.50	1.60
	180	280	175	1.50	1.70
	200	330	190	1.70	2.00
	224	354	190	1.85	2.20
	250	380	190	2.00	2.40
	280	430	200	2.30	2.80
	300	450	200	2.40	3.00
	315	465	200	2.50	3.20
	355	525	210	3.20	4.50
	400	570	210	3.60	5.50
280	100	190	185	1.30	1.40
	125	215	185	1.40	1.50
	140	240	190	1.50	1.70
	150	250	190	1.55	1.70
	160	260	190	1.60	1.75
	180	280	190	1.70	1.90
	200	330	205	1.90	2.10
	224	354	205	2.00	2.30
	250	380	205	2.20	2.50
	280	430	215	2.50	2.90
	300	450	215	2.55	3.00
	315	465	215	2.65	3.30
	355	525	225	3.50	4.60
	400	570	225	3.90	5.50
	450	620	225	5.10	8.00
300	100	190	195	1.40	1.50
	125	215	195	1.50	1.60
	140	240	200	1.60	1.70
	150	250	200	1.70	1.80
	160	260	200	1.75	1.85
	180	280	200	1.80	2.00
	200	330	215	2.00	2.30
	224	354	215	2.20	2.40
	250	380	215	2.30	2.70
	280	430	225	2.60	3.00
	300	450	225	2.70	3.10
	315	465	225	2.80	3.30
	355	525	235	3.70	4.60
	400	570	235	4.10	5.50
	450	620	235	5.40	8.00

ALNOR® ventilation systems
is a registered trademark protected by a technical patent. All modification rights reserved.

Segmented T-pieces and X-pieces

TSCL/TSL/XSCL/XSL/TSC/TS/XSC/XS

Dimensions

Ød$_1$ (mm)	Ød$_3$ / Ød$_4$ (mm)	L (mm)	H (mm)	Weight (kg)	
				TSCL/TSC	XSCL/XSL
315	80	175	205	1.30	1.30
	100	195	205	1.50	1.60
	125	220	205	1.60	1.70
	140	245	210	1.70	1.80
	150	255	210	1.70	1.90
	160	265	210	1.80	1.90
	180	285	210	1.90	2.00
	200	335	225	2.10	2.40
	224	359	225	2.30	2.50
	250	385	225	2.50	2.80
	280	435	235	2.70	3.10
	300	455	235	2.80	3.20
	315	470	235	2.90	3.30
	355	530	245	3.80	4.70
	400	575	245	4.20	5.60
	450	625	245	5.60	8.00
	500	685	250	6.20	9.40
355	100	195	225	2.00	2.10
	125	220	225	2.20	2.30
	140	245	230	2.30	2.40
	150	255	230	2.40	2.50
	160	265	230	2.50	2.60
	180	285	230	2.60	2.70
	200	335	245	2.80	3.00
	224	359	245	3.00	3.20
	250	385	245	3.30	3.60
	280	415	245	3.50	3.90
	300	455	255	3.70	4.10
	315	470	255	3.80	4.30
	355	530	265	4.40	5.00
	400	575	265	4.80	5.80
	450	625	265	6.30	8.20
	500	685	270	6.80	9.60
	560	745	270	7.50	11.20

Ød$_1$ (mm)	Ød$_3$ / Ød$_4$ (mm)	L (mm)	H (mm)	Weight (kg)	
				TSCL/TSC	XSCL/XSL
400	100	190	245	2.50	2.60
	125	215	245	2.70	2.70
	140	240	250	2.80	2.90
	150	250	250	2.90	3.00
	160	260	250	3.00	3.00
	180	280	250	3.10	3.20
	200	330	265	3.40	3.60
	224	354	265	3.60	3.80
	250	380	265	3.80	4.10
	280	430	275	4.20	4.60
	300	450	275	4.40	4.70
	315	465	275	4.50	4.80
	355	525	285	5.00	5.50
	400	570	285	5.50	6.20
	450	620	285	7.10	8.50
	500	680	290	7.60	9.90
	560	740	290	8.30	11.40
	600	780	290	8.70	12.50
	630	810	290	9.00	13.50
450	125	215	270	3.70	3.80
	140	240	275	3.90	4.00
	150	250	275	4.00	4.10
	160	260	275	4.10	4.20
	180	280	275	4.30	4.40
	200	330	290	4.70	4.90
	224	354	290	5.00	5.20
	250	380	290	5.30	5.60
	280	430	300	5.70	6.10
	300	450	300	6.00	6.30
	315	465	300	6.10	6.50
	355	525	310	6.80	7.40
	400	570	310	7.40	8.10
	450	620	310	8.00	9.00
	500	680	315	8.70	10.40
	560	740	315	9.40	11.90
	600	780	315	9.80	13.00
	630	810	315	10.10	13.90
	710	890	315	13.50	17.80

ALNOR® ventilation systems
is a registered trademark protected by a technical patent. All modification rights reserved.

Segmented T-pieces and X-pieces

TSCL/TSL/XSCL/XSL/TSC/TS/XSC/XS

Dimensions

Ød$_1$ (mm)	Ød$_3$ / Ød$_4$ (mm)	L (mm)	H (mm)	Weight (kg)	
				TSCL/TSC	XSCL/XSL
500	125	215	295	4.10	4.20
	140	240	300	4.40	4.50
	150	250	300	4.50	4.60
	160	260	300	4.55	4.70
	180	280	300	4.70	4.90
	200	330	315	5.30	5.50
	224	354	315	5.50	5.70
	250	380	315	5.80	6.10
	280	430	325	6.40	6.70
	300	450	325	6.60	6.90
	315	465	325	6.70	7.10
	355	525	335	7.50	8.00
	400	570	335	8.00	8.70
	450	620	335	8.70	9.70
	500	680	340	9.40	10.60
	560	740	340	10.10	12.00
	600	780	340	10.60	13.20
	630	810	340	11.00	14.00
	710	890	340	14.50	20.40
	800	980	340	15.90	24.20
560	200	330	345	5.80	6.00
	224	354	345	6.10	6.30
	250	380	345	6.50	6.70
	280	430	355	7.00	7.40
	300	450	355	7.30	7.60
	315	465	355	7.40	7.80
	355	525	365	8.20	8.70
	400	570	365	8.80	9.50
	450	620	365	9.60	10.50
	500	680	370	10.30	11.40
	560	740	370	11.10	12.30
	600	780	370	11.60	13.30
	630	810	370	12.00	14.20
	710	890	370	15.70	20.50
	800	980	370	17.20	24.30
	900	1080	370	19.10	29.00

Ød$_1$ (mm)	Ød$_3$ / Ød$_4$ (mm)	L (mm)	H (mm)	Weight (kg)	
				TSCL/TSC	XSCL/XSL
600	200	330	365	6.20	6.50
	224	354	365	6.50	6.70
	250	380	365	6.90	7.20
	280	430	375	7.50	7.80
	300	470	385	7.80	8.00
	315	485	385	7.90	8.20
	355	525	385	8.80	9.30
	400	570	385	9.40	10.00
	450	620	385	10.20	11.00
	500	680	390	10.90	11.90
	560	740	390	11.70	12.80
	600	780	390	12.30	13.50
	630	810	390	12.60	14.30
	710	890	390	16.50	20.50
	800	980	390	18.00	24.30
	900	1080	390	20.00	28.90
630	200	330	380	6.50	6.80
	224	354	380	6.80	7.00
	250	380	380	7.20	7.50
	280	430	390	7.80	8.20
	300	450	390	8.10	8.50
	315	465	390	8.30	8.60
	355	525	400	9.20	9.60
	400	570	400	9.80	10.50
	450	620	400	10.60	11.50
	500	680	405	11.40	12.50
	560	740	405	12.30	13.30
	600	780	405	12.70	14.00
	630	810	405	13.20	14.40
	710	890	405	17.20	20.50
	800	980	405	18.80	24.30
	900	1080	405	20.70	28.90
	1000	1180	405	23.00	34.60

ALNOR® ventilation systems
is a registered trademark protected by a technical patent. All modification rights reserved.

TSCL/TSL/XSCL/XSL/TSC/TS/XSC/XS

Dimensions

Ød$_1$ (mm)	Ød$_3$ / Ød$_4$ (mm)	L (mm)	H (mm)	Weight (kg)	
				TSCL/TSC	XSCL/XSL
710	250	380	420	10.60	10.90
	280	410	420	11.10	11.80
	300	450	430	11.80	12.10
	315	465	430	12.00	12.30
	355	525	440	13.10	13.60
	400	570	440	14.00	14.60
	450	620	440	15.00	15.80
	500	680	445	16.00	16.90
	560	740	445	17.00	18.00
	600	780	445	17.70	18.70
	630	810	445	18.20	19.30
	710	890	445	20.30	22.20
	800	980	445	22.00	25.70
	900	1080	445	24.10	30.30
	1000	1180	445	26.40	36.00
	1120	1300	445	31.70	47.00
800	250	380	465	11.90	12.20
	280	430	475	12.80	13.10
	300	450	475	13.20	13.50
	315	465	475	13.50	13.70
	355	525	485	14.70	15.10
	400	570	485	15.60	16.10
	450	620	485	16.70	17.40
	500	680	490	17.80	18.60
	560	740	490	18.90	19.80
	600	780	490	19.70	20.60
	630	810	490	20.20	21.20
	710	890	490	22.40	24.20
	800	980	490	24.20	26.10
	900	1080	490	26.50	30.40
	1000	1180	490	28.90	36.00
	1120	1300	490	34.60	47.20
	1250	1430	490	37.90	56.20

Ød$_1$ (mm)	Ød$_3$ / Ød$_4$ (mm)	L (mm)	H (mm)	Weight (kg)	
				TSCL/TSC	XSCL/XSL
900	315	465	525	15.10	15.30
	355	525	535	16.40	16.80
	400	570	535	17.40	17.90
	450	620	535	18.60	19.30
	500	680	540	19.80	20.30
	560	740	540	21.10	21.80
	600	780	540	21.80	22.70
	630	810	540	22.50	23.30
	710	890	540	24.80	26.30
	800	980	540	26.70	28.40
	900	1080	540	29.20	31.00
	1000	1180	540	31.80	36.40
	1120	1300	540	37.80	47.10
	1250	1430	540	41.40	55.90
1000	315	465	575	17.40	17.60
	355	525	585	18.90	19.20
	400	570	585	20.00	20.40
	450	620	585	21.20	21.80
	500	680	590	22.60	23.30
	560	740	590	24.00	24.60
	600	780	590	24.80	25.40
	630	810	590	25.50	26.00
	710	890	590	28.00	29.30
	800	980	590	30.00	31.40
	900	1080	590	32.50	34.10
	1000	1180	590	35.30	37.30
	1120	1300	590	41.80	47.70
	1250	1430	590	45.60	56.40
1250	500	680	715	31.00	31.70
	560	740	715	32.80	33.20
	600	780	715	34.00	34.30
	630	810	715	34.90	35.20
	710	890	715	38.00	38.80
	800	980	715	40.70	41.50
	900	1080	715	43.70	44.50
	1000	1180	715	47.30	48.60
	1120	1300	715	51.40	53.00
	1250	1430	715	55.60	57.30
	1400	1640	745	60.50	67.70
	1500	1740	745	63.90	75.40
	1600	1840	745	67.40	83.80

ALNOR® ventilation systems
is a registered trademark protected by a technical patent. All modification rights reserved.

Segmented T-pieces and X-pieces

TSCL/TSL/XSCL/XSL/TSC/TS/XSC/XS

Dimensions

$Ød_1$ (mm)	$Ød_3$ / $Ød_4$ (mm)	L (mm)	H (mm)	Weight (kg)	
				TSCL/TSC	XSCL/XSL
1400	600	780	790	37.90	38.10
	630	810	790	38.90	39.00
	710	890	790	42.20	42.90
	800	980	790	45.30	45.80
	900	1080	790	48.60	49.00
	1000	1180	790	52.70	53.30
	1120	1300	790	57.20	58.00
	1250	1430	790	61.70	62.50
	1400	1640	820	67.00	67.80
	1500	1740	820	70.50	75.20
	1600	1840	820	74.00	83.30
1500	630	810	840	41.60	41.60
	710	890	840	45.10	45.70
	800	980	840	48.30	48.70
	900	1080	840	51.90	52.10
	1000	1180	840	56.20	56.50
	1120	1300	840	60.90	61.50
	1250	1430	840	65.60	66.10
	1400	1640	870	71.10	71.50
	1500	1740	870	74.80	75.30
	1600	1840	870	78.70	83.00
1600	710	890	890	48.00	48.50
	800	980	890	51.40	51.70
	900	1080	890	55.20	55.30
	1000	1180	890	59.80	59.80
	1120	1300	890	64.50	65.00
	1250	1430	890	69.60	69.70
	1400	1640	920	75.40	75.30
	1500	1740	920	79.30	79.20
	1600	1840	920	83.30	83.10

ALNOR® ventilation systems
is a registered trademark protected by a technical patent. All modification rights reserved.

Branch-off T-piece and four-way piece with gasket

COLL/COLLL

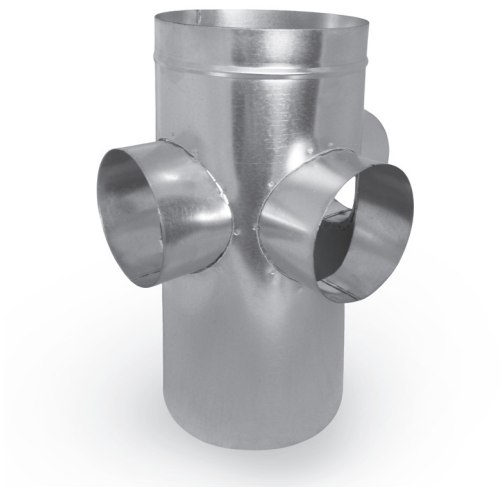

Description

The T-piece divides the main ventilation flow into 125 mm diameter branches. Depending on the type, 1 to 4 branches can be fabricated in any configuration, side by side, or at the opposite ends, etc. Some joint sizes, e.g. 125 mm, allow only 1 or 2 branches at the opposite ends.

Available materials — Product code example
COLL-...-...-... – galvanized steel sheet
COLL-K-...-...-... — 1.4301/304 stainless steel sheet

Product code example
Product code: COLL - **160 - 1 - 3**

type
Ød$_1$
branch port location
branch port location

Dimensions

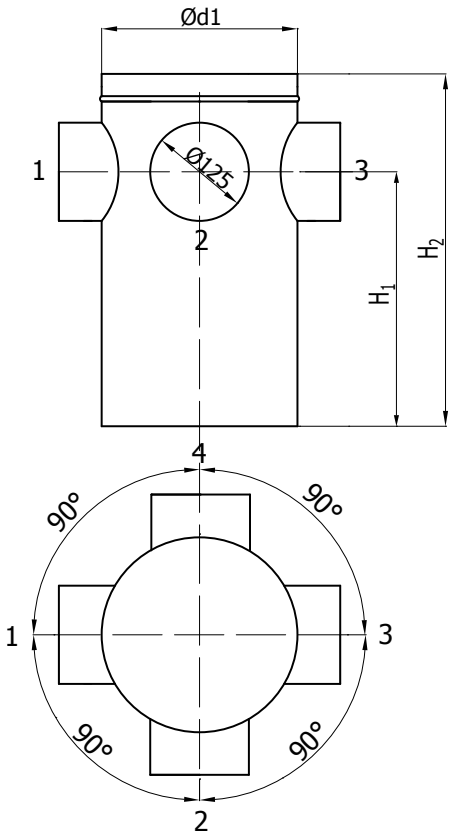

Ød$_1$ (mm)	H_1 (mm)	H_2 (mm)
160	250	400
200	250	400
250	250	400
315	250	400
355	250	400
400	250	400
450	250	400
500	250	400
560	250	400
630	250	400

ALNOR® ventilation systems
is a registered trademark protected by a technical patent. All modification rights reserved.

45° branch T-pieces and X-pieces

TSVL/TSV-45 XSVL/XSV-45

TSVL-45



XSVL-45



Description

T-pieces and X-pieces are ventilation system components for SPIRAL ducts and other fittings. The branch port and the branch duct can be of equal or smaller diameter than the main duct. The branch port can be angled at 15, 30, 45 or 60 degrees, or any other requested angle. The selection of various configurations allows building branches without an unnecessary increase of flow resistance.

TSVL-45 — T-piece with an EPDM gasket (air tightness class D) and a 45° branch port. Available on request: 15°, 30°, 60°, e.g. TSVL 15° - d_1- d_3

TSV-45 — T-piece without a gasket, with a 45° branch port. Available on request: 15°, 30°, 60°, e.g. TSV 15° - d_1- d_3

XSVL-45 — four-way piece with an EPDM gasket (air tightness class D) and a 45° branch port. Available on request: 15°, 30°, 60°, e.g. XSVL 15° - d_1- d_3- d_4

XSV-45 — four-way piece without a gasket, with a 45° branch port. Available on request: 15°.

Available materials — Product code example

TSVL-45-... -... – galvanized steel sheet
TSVL-45-K-...-... — 1.4301/304 stainless steel sheet
TSVL-45-K-...-...-316L — 1.4404/316L stainless steel sheet, molybdenum-enriched
TSVL-45-A-...-... — AW-1050A H24 aluminium sheet
TSVL-45-CU-...-... — M1E z4 copper sheet

Product code example

Product code: **TSVL-45 - aaa - bbb**

type
Ød$_1$
Ød$_3$

Dimensions

TSV-45

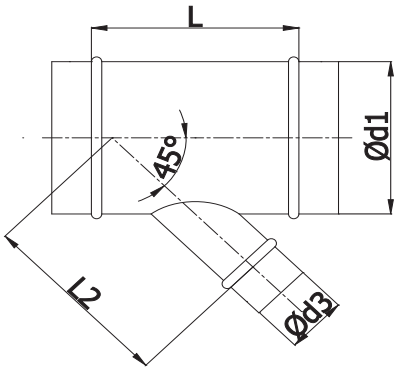

XSVL-45

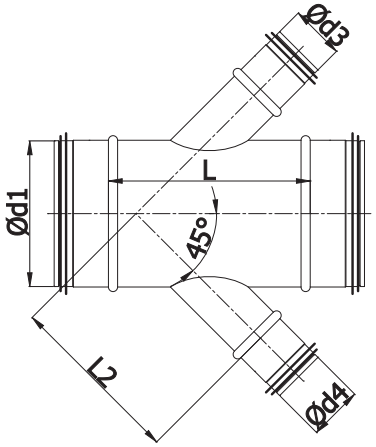

ALNOR® ventilation systems
is a registered trademark protected by a technical patent. All modification rights reserved.

45° branch T-pieces and X-pieces

TSVL/TSV-45 XSVL/XSV-45

Dimensions

Ød$_1$ (mm)	Ød$_3$ (mm)	L (mm)	L$_2$ (mm)	Weight (kg)	
				TSVL/TSV	XSVL/XSV
80	80	185	165	0.4	0.5
100	80	185	180	0.4	0.5
	100	210	200	0.5	0.6
125	80	185	195	0.5	0.6
	100	210	220	0.6	0.7
	125	250	245	0.7	0.9
140	80	185	210	0.6	0.7
	100	215	230	0.7	0.8
	125	250	255	0.8	0.9
	140	270	270	0.9	1.0
150	80	185	215	0.6	0.7
	100	215	235	0.7	0.8
	125	250	260	0.8	1.0
	140	270	275	0.9	1.1
	150	285	285	0.9	1.2
160	80	185	225	0.6	0.7
	100	215	245	0.7	0.9
	125	250	270	0.8	1.0
	140	270	285	0.9	1.1
	150	285	295	1.0	1.2
	160	300	305	1.0	1.3
180	80	185	240	0.7	0.8
	100	215	260	0.8	0.9
	125	250	285	0.9	1.1
	140	270	300	1.0	1.2
	150	285	310	1.0	1.3
	160	300	320	1.1	1.4
	180	325	340	1.2	1.5
200	80	185	250	0.8	0.9
	100	215	270	0.9	1.0
	125	250	295	1.0	1.2
	140	270	310	1.0	1.3
	150	285	320	1.1	1.4
	160	300	330	1.2	1.5
	180	325	350	1.3	1.6
	200	355	370	1.4	1.8
224	100	215	290	1.0	1.1
	125	250	315	1.1	1.3
	140	270	330	1.2	1.4
	150	285	340	1.2	1.5
	160	300	350	1.3	1.6
	180	325	370	1.4	1.7
	200	355	390	1.5	1.9
	224	390	415	1.7	2.2

Ød$_1$ (mm)	Ød$_3$ (mm)	L (mm)	L$_2$ (mm)	Weight (kg)	
				TSVL/TSV	XSVL/XSV
250	100	215	305	1.2	1.3
	125	250	330	1.3	1.5
	140	270	345	1.4	1.6
	150	285	355	1.5	1.7
	160	300	365	1.5	1.8
	180	325	385	1.7	2.0
	200	355	405	1.8	2.2
	224	390	435	2.0	2.4
	250	440	455	2.3	2.9
280	125	250	355	1.5	1.6
	140	270	370	1.6	1.8
	150	285	380	1.6	1.9
	160	300	390	1.7	2.0
	180	325	410	1.8	2.1
	200	355	430	2.0	2.3
	224	390	455	2.2	2.6
	250	440	480	2.5	3.0
	280	480	510	2.7	3.4
300	125	250	365	1.6	1.7
	140	270	380	1.6	1.8
	150	285	390	1.7	2.0
	160	300	400	1.8	2.0
	180	325	420	1.9	2.2
	200	355	440	2.1	2.4
	224	390	465	2.3	2.7
	250	440	490	2.6	3.1
	280	480	520	2.8	3.5
	300	510	545	3.1	3.8
315	140	270	395	1.7	1.9
	150	285	405	1.8	2.0
	160	300	415	1.9	2.1
	180	325	435	2.0	2.3
	200	355	455	2.2	2.5
	224	390	480	2.4	2.8
	250	440	505	2.7	3.3
	280	480	535	3.0	3.6
	300	510	555	3.2	3.9
	315	530	570	3.3	4.1

ALNOR® ventilation systems
is a registered trademark protected by a technical patent. All modification rights reserved.

45° branch port T-pieces and X-pieces

TSVL/TSV-45 XSVL/XSV-45

Dimensions

Ød$_1$ (mm)	Ød$_3$ (mm)	L (mm)	L$_2$ (mm)	Weight (kg)	
				TSVL/TSV	XSVL/XSV
355	150	285	430	2.4	2.7
	160	300	440	2.5	2.8
	180	325	460	2.7	3.0
	200	355	480	2.9	3.3
	224	390	505	3.1	3.6
	250	440	530	3.5	4.2
	280	480	560	3.9	4.7
	300	510	580	4.1	5.0
	315	530	595	4.3	5.2
	355	585	635	4.8	6.0
400	160	300	475	3.0	3.3
	180	325	495	3.2	3.6
	200	355	515	3.4	3.8
	224	390	540	3.7	4.2
	250	440	565	4.2	4.8
	280	480	595	4.5	5.2
	300	510	615	4.8	5.6
	315	530	630	5.0	5.9
	355	585	670	5.5	6.6
	400	650	715	6.3	7.8
450	180	325	530	4.2	4.6
	200	355	550	4.5	4.9
	224	390	575	4.8	5.4
	250	440	600	5.4	6.1
	280	480	630	5.8	6.7
	300	510	650	6.1	7.1
	315	530	665	6.4	7.4
	355	585	705	7.0	8.3
	400	650	750	8.0	9.7
	450	740	800	9.0	11.2
500	200	355	585	4.9	5.3
	224	390	610	5.3	5.8
	250	440	635	5.9	6.6
	280	480	665	6.4	7.2
	300	510	685	6.7	7.6
	315	530	700	6.9	7.9
	355	585	740	7.6	8.9
	400	650	785	8.6	10.3
	450	740	835	9.7	11.8
	500	810	885	10.8	14.3

Ød$_1$ (mm)	Ød$_3$ (mm)	L (mm)	L$_2$ (mm)	Weight (kg)	
				TSVL/TSV	XSVL/XSV
560	224	390	655	5.9	6.4
	250	440	680	6.5	7.2
	280	480	710	7.0	7.8
	300	510	730	7.4	8.3
	315	530	745	7.6	8.7
	355	585	785	8.4	9.6
	400	650	830	9.4	11.0
	450	740	880	10.6	12.6
	500	810	930	11.7	14.1
	560	900	990	13.1	16.1
600	250	440	710	6.9	7.7
	280	480	740	7.5	8.3
	300	510	760	7.9	8.8
	315	530	775	8.1	9.2
	355	585	815	8.9	10.1
	400	650	860	10.0	11.6
	450	740	910	11.2	13.2
	500	810	960	12.3	14.7
	560	900	1020	13.8	16.7
	600	960	1060	14.8	18.2
630	280	480	760	7.8	8.6
	300	510	780	8.2	9.1
	315	530	795	8.5	9.5
	355	585	835	9.3	10.5
	400	650	880	10.4	12.0
	450	740	930	11.7	13.6
	500	810	980	12.8	15.2
	560	900	1040	14.3	17.2
	600	960	1080	15.3	18.6
	630	1010	1110	16.2	19.8
710	300	510	840	12.5	13.7
	315	530	855	12.9	14.2
	355	585	895	14.0	15.6
	400	650	940	15.6	17.6
	450	740	990	17.4	19.9
	500	810	1040	19.0	21.9
	560	900	1100	21.0	24.6
	600	960	1140	22.4	26.5
	630	1010	1170	23.6	28.0
	710	1130	1250	27.1	33.0

ALNOR® ventilation systems
is a registered trademark protected by a technical patent. All modification rights reserved.

45° branch port T-pieces and X-pieces

TSVL/TSV-45 XSVL/XSV-45

Dimensions

Ød$_1$ (mm)	Ød$_3$ (mm)	L (mm)	L$_2$ (mm)	Weight (kg)	
				TSVL/TSV	XSVL/XSV
800	315	530	930	14.5	15.8
	355	585	970	15.7	17.3
	400	650	1015	17.4	19.5
	450	740	1065	19.4	22.0
	500	810	1115	21.0	24.0
	560	900	1175	23.3	26.9
	600	960	1215	24.8	28.9
	630	1010	1245	26.0	30.5
	710	1140	1325	29.8	35.8
	800	1270	1415	33.7	41.1
900	355	585	1045	17.5	19.1
	400	650	1090	19.3	21.4
	450	740	1140	21.5	24.0
	500	810	1190	23.3	26.3
	560	900	1250	25.7	29.3
	600	960	1290	27.3	31.4
	630	1010	1320	28.7	33.1
	710	1140	1400	32.7	38.6
	800	1270	1490	36.8	44.0
	900	1430	1590	41.8	50.9
1000	400	650	1160	21.9	23.9
	450	740	1210	24.3	26.7
	500	810	1260	26.3	29.2
	560	900	1320	28.5	32.3
	600	960	1360	30.6	34.5
	630	1010	1390	32.0	36.3
	710	1140	1470	36.3	42.0
	800	1270	1560	40.6	47.7
	900	1430	1660	45.9	54.7
	1000	1590	1760	52.0	62.5
1120	500	810	1345	32.2	35.4
	560	900	1405	35.4	39.1
	600	960	1445	37.5	41.7
	630	1010	1475	39.2	43.8
	710	1140	1555	44.3	50.4
	800	1270	1645	49.4	57.1
	900	1430	1745	55.6	65.1
	1000	1590	1845	62.6	74.6
	1120	1750	1965	70.2	85.3

Ød$_1$ (mm)	Ød$_3$ (mm)	L (mm)	L$_2$ (mm)	Weight (kg)	
				TSVL/TSV	XSVL/XSV
1250	500	810	1440	35.6	38.7
	560	900	1500	39.0	42.8
	600	960	1540	41.3	45.5
	630	1010	1570	43.2	47.7
1250	710	1140	1650	48.6	54.7
	800	1270	1740	54.1	61.7
	900	1430	1840	60.8	70.1
	1000	1590	1940	68.2	80.0
	1120	1750	2060	76.0	90.4
	1250	1940	2190	85.5	103.7
1400	600	960	1650	45.7	49.9
	630	1010	1680	47.8	52.3
	710	1140	1760	53.7	59.7
	800	1270	1850	59.6	67.1
	900	1430	1950	66.8	75.9
	1000	1590	2050	74.7	86.3
	1120	1750	2170	82.9	97.1
	1250	1940	2300	92.9	110.5
	1400	2150	2450	104.7	126.8
1500	630	1010	1750	50.8	53.0
	710	1140	1830	57.0	60.4
	800	1270	1920	63.4	67.6
	900	1430	2020	70.9	77.0
	1000	1590	2120	79.2	87.7
	1120	1750	2240	87.7	98.6
	1250	1940	2370	98.0	111.9
	1400	2150	2520	110.2	128.4
	1500	2290	2620	118.9	140.6
1600	710	1140	1910	60.5	63.9
	800	1270	2000	67.2	71.5
	900	1430	2100	75.2	81.2
	1000	1590	2200	83.8	92.3
	1120	1750	2320	92.7	103.5
	1250	1940	2450	103.3	117.0
	1400	2150	2600	115.9	133.9
	1500	2290	2700	124.8	146.0
	1600	2430	2800	134.0	158.7

ALNOR® ventilation systems
is a registered trademark protected by a technical patent. All modification rights reserved.

Y-piece with gasket

YSVL-45



Description

Y-pieces are the best ventilation system components in terms of the air flow distribution. As a result of the uniform air distribution, all ductwork sections operate have the same pressure and flow distribution characteristics. The gaskets installed in the piece meet requirements of air tightness class D accordign to EN 12237. The piece is most often installed in mechanical and heat recuperation ventilation systems in residential buildings.

YSVL-45 — T-piece with an EPDM gasket and a 45° branch port. Available on request: 15°, 30°, 60°, e.g. YSVL-15- d_1 - d_3 - d_4

Specify both angles and all tube diameters when ordering. Standard version: d_3=d_4

Available materials — Product code example

YSVL-45-... -...-... – galvanized steel sheet
YSVL-45-K-...-...-... — 1.4301/304 stainless steel sheet
YSVL-45-K-...-...-...-316L — 1.4404/316L stainless steel sheet, molybdenum-enriched
YSVL-45-A-...-...-... — AW-1050A H24 aluminium sheet
YSVL-45-CU-...-...-... — M1E z4 copper sheet

Product code example

Product code: **YSVL-45 - aaa - bbb - ccc**

type
Ød$_1$
Ød$_3$
Ød$_4$

Dimensions

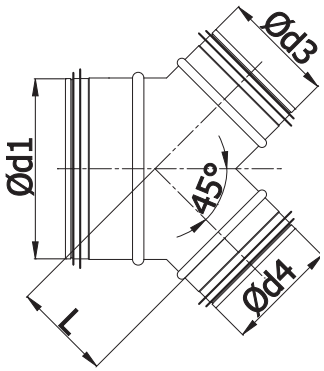

Ød$_1$ (mm)	Ød$_3$ (mm)	Ød$_4$ (mm)	L (mm)	Weight (kg)
80	80	80	120	0.4
100	100	100	140	0.5
125	125	125	170	0.7
140	100	100	185	0.8
150	100	100	190	1.0
160	112	112	195	1.2
160	160	160	205	1.3
180	125	125	215	1.5
200	140	140	230	1.7
250	180	180	280	1.9
280	200	200	310	2.3
300	200	200	320	2.5
315	224	224	335	2.9
355	250	250	365	4.0
400	280	280	400	4.6
400	300	300	410	4.8
450	315	315	440	6.4
500	355	355	490	7.7
560	400	400	550	9.2
600	400	400	580	9.8
630	450	450	610	11.4
710	500	500	670	15.6
800	560	560	680	18.8
900	630	630	730	21.5
1000	710	710	900	31.0
1120	800	800	960	39.0
1250	900	900	1050	46.7
1400	1120	1120	1250	67.4
1400	1250	1250	1340	75.8
1500	1250	1250	1420	80.4
1500	1400	1400	1520	92.8
1600	1400	1400	1630	101.2
1600	1500	1500	1700	111.0

ALNOR® ventilation systems
is a registered trademark protected by a technical patent. All modification rights reserved.

Y-piece

YSV-45



Description

Y-pieces are the best ventilation system components in terms of the air flow distribution. As a result of the uniform air distribution, all ductwork sections operate have the same pressure and flow distribution characteristics. This piece is most often installed in warm air distribution systems supplied by hot air distribution fireplaces and heat recuperation systems.

YSV-45 – Y-piece with a 45° branch off. Available on request: 15°, 30°, 60°, e.g. YSV-15- d_1 - d_3 - d_4

Specify both angles and all tube diameters when ordering. Standard version: d_3=d_4.

Available materials — Product code example

YSV-45-... -...-... – galvanized steel sheet
YSV-45-K-...-...-... — 1.4301/304 stainless steel sheet
YSV-45-K-...-...-...-316L — 1.4404/316L stainless steel sheet, molybdenum-enriched
YSV-45-A-...-...-... — AW-1050A H24 aluminium sheet
YSV-45-CU-...-...-... — M1E z4 copper sheet

Product code example

Product code: **YSV-45 - aaa - bbb - ccc**

type
Ød$_1$
Ød$_3$
Ød$_4$

Dimensions

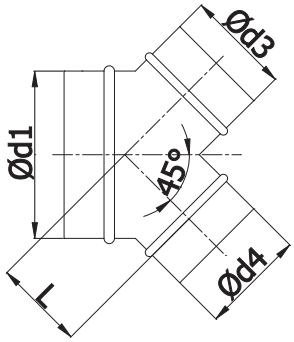

Ød$_1$ (mm)	Ød$_3$ (mm)	Ød$_4$ (mm)	L (mm)	Weight (kg)
80	80	80	120	0.4
100	100	100	140	0.5
125	125	125	170	0.7
140	100	100	185	0.8
150	100	100	190	1.0
160	112	112	195	1.2
160	160	160	205	1.3
180	125	125	215	1.5
200	140	140	230	1.7
250	180	180	280	1.9
280	200	200	310	2.3
300	200	200	320	2.5
315	224	224	335	2.9
355	250	250	365	4.0
400	280	280	400	4.6
400	300	300	410	4.8
450	315	315	440	6.4
500	355	355	490	7.7
560	400	400	550	9.2
600	400	400	580	9.8
630	450	450	610	11.4
710	500	500	670	15.6
800	560	560	680	18.8
900	630	630	730	21.5
1000	710	710	900	31.0
1120	800	800	960	39.0
1250	900	900	1050	46.7
1400	1120	1120	1250	67.4
1400	1250	1250	1340	75.8
1500	1250	1250	1420	80.4
1500	1400	1400	1520	92.8
1600	1400	1400	1630	101.2
1600	1500	1500	1700	111.0

ALNOR® ventilation systems
is a registered trademark protected by a technical patent. All modification rights reserved.

Male coupling with gasket for SPIRAL ducts

NSL



Description

NSL male couplings allow connecting SPIRAL round ducts or round plain ducts with inner joints. The piece is installed by pressing both ends into the ducts to be joined, up to the stop in the middle of the male coupling. Next, the male coupling needs to be fastened to both ducts with self-drilling screws or rivets. As a result of the double EPDM rubber gasket, the product meets requirements for air tightness class D according to EN 12237.

Available materials — Product code example

NSL-... – galvanized steel sheet
NSL-K-... — 1.4301/304 stainless steel sheet
NSL-K-...- 316L — 1.4404/316L stainless steel sheet, molybdenum-enriched
NSL-A-... — AW-1050A H24 aluminium sheet
NSL-CU-... — M1E z4 copper sheet

Product code example

Product code: **NSL - aaa**

type
Ød

Dimensions

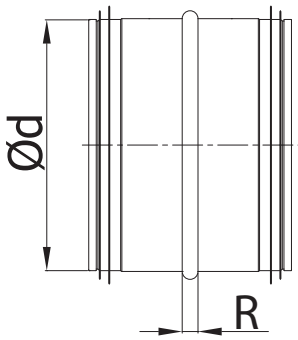

$Ød_{nom}$ (mm)	R (mm)	Weight (kg)
80	8	0.10
100	8	0.12
125	8	0.15
140	8	0.17
150	8	0.18
160	8	0.19
180	8	0.21
200	8	0.24
224	8	0.27
250	8	0.30
280	8	0.35
300	8	0.36
315	8	0.38
355	8	0.58
400	8	0.65
450	8	0.95
500	8	1.05
560	8	1.45
600	8	1.55
630	8	1.60
710	10	2.75
800	10	2.10
900	12	3.45
1000	12	5.70
1120	12	6.40
1250	12	7.15
1400	12	4.75
1500	12	5.10
1600	12	5.40

ALNOR® ventilation systems
is a registered trademark protected by a technical patent. All modification rights reserved.

Male coupling for SPIRAL ducts
NS



Description

NS male couplings allow connecting round SPIRAL ducts or round plain ducts with inner joints. The piece is installed by pressing both ends into the ducts to be joined, up to the stop in the middle of the male coupling. Next, the male coupling needs to be fastened to both ducts with self-drilling screws or rivets. The air tightness level can be increased to class B by wrapping the joints with the TAL, TALK, MET, DUCT or TAPV sealing tape.

Available materials — Product code example

NS-... – galvanized steel sheet
NS-K-... — 1.4301/304 stainless steel sheet
NS-K-...- 316L — 1.4404/316L stainless steel sheet, molybdenum-enriched
NS-A-... — AW-1050A H24 aluminium sheet
NS-CU-... — M1E z4 copper sheet

Product code example

Product code: **NS - aaa**

type
Ød

Dimensions

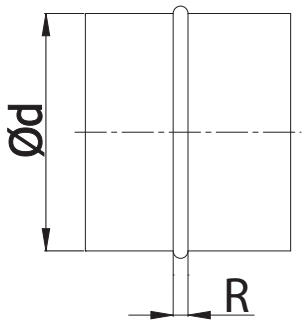

$Ød_{nom}$ (mm)	R (mm)	Weight (kg)
80	8	0.10
100	8	0.12
125	8	0.15
140	8	0.17
150	8	0.18
160	8	0.19
180	8	0.21
200	8	0.24
224	8	0.27
250	8	0.30
280	8	0.35
300	8	0.36
315	8	0.38
355	8	0.58
400	8	0.65
450	8	0.95
500	8	1.05
560	8	1.45
600	8	1.55
630	8	1.60
710	10	2.75
800	10	2.10
900	12	3.45
1000	12	5.70
1120	12	6.40
1250	12	7.15
1400	12	4.75
1500	12	5.10
1600	12	5.40

ALNOR® ventilation systems
is a registered trademark protected by a technical patent. All modification rights reserved.

Long coupling for round ducts

SNSL



Description

SNSL male couplings with EPDM gaskets enable making flexible connections. They can be used as expansion joints in ductwork or for connecting ducts at floor penetrations. SNSL male couplings can also be installed for splicing replaced ducts in legacy systems. It is a popular solution for ventilation ducts continuously exposed to temperature variations which affect thermal expansion and shrinking of the ductwork. The fitting is also perfect for connecting fire dampers to the ductwork.

Available materials — Product code example

SNSL-... -... – galvanized steel sheet
SNSL-K-...-... — 1.4301/304 stainless steel sheet
SNSL-K-...-...-316L — 1.4404/316L stainless steel sheet, molybdenum-enriched
SNSL-A-...-... — AW-1050A H24 aluminium sheet
SNSL-CU-...-... — M1E z4 copper sheet

Product code example

Product code: **SNSL - aaa - bbb**

type
Ød
L

Dimensions

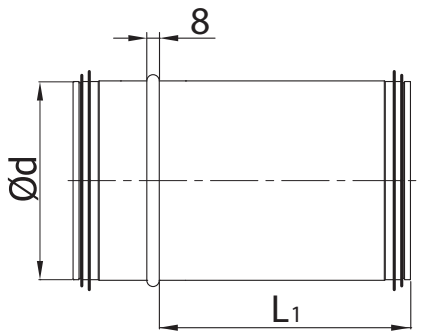

$Ød_{nom}$ (mm)	L_{nom} (mm)	L_1 (mm)	Weight (kg)
80	150	133	0.19
80	300	284	0.34
80	500	548	0.60
100	150	133	0.24
100	300	284	0.42
100	500	548	0.75
125	150	133	0.30
125	300	284	0.52
125	500	548	0.93
140	150	133	0.33
140	300	284	0.59
140	500	548	1.05
150	150	133	0.35
150	300	284	0.63
150	500	548	1.12
160	150	133	0.38
160	300	284	0.67
160	500	548	1.20
180	150	133	0.42
180	300	284	0.76
180	500	548	1.34
200	150	133	0.47
200	300	284	0.85
200	500	548	1.50
224	150	133	0.53
224	300	284	0.95
224	500	548	1.67

ALNOR® ventilation systems
is a registered trademark protected by a technical patent. All modification rights reserved.

Long coupling for round ducts
SNSL

Dimensions

$Ød_{nom}$ (mm)	L_{nom} (mm)	L_1 (mm)	Weight (kg)
250	150	177	0.72
250	300	297	1.10
250	500	527	1.80
280	150	177	0.80
280	300	297	1.22
280	500	527	2.00
300	150	177	0.86
300	300	297	1.30
300	500	527	2.16
315	150	177	0.90
315	300	297	1.33
315	500	527	2.27
355	150	177	1.10
355	300	297	1.60
355	500	527	2.65
400	150	175	1.24
400	300	297	1.85
400	500	510	2.90
450	150	175	1.50
450	300	297	2.18
450	500	510	3.36
500	150	175	1.67
500	300	297	2.43
500	500	510	3.74
560	150	175	2.25
560	300	297	3.25
560	500	510	5.01
630	150	175	2.52
630	300	297	3.66
630	500	510	5.65

ALNOR® ventilation systems
is a registered trademark protected by a technical patent. All modification rights reserved.

Female couplings for ventilation fittings

MSF



Description

MSF female couplings can be used for connecting round fittings. The Installation method is identical for both gasket-fitted or bare ends. The female end is pressed over the end of a bend, T-piece, damper or reducer and fastened with self-drilling screws or rivets. Joints provided with gasket fittings require no additional sealing. If no gaskets are provided, it is best to seal the joint with a sealing tape.

Available materials — Product code example

MSF-... – galvanized steel sheet
MSF-K-... — 1.4301/304 stainless steel sheet
MSF-K-...-316L 1.4404/316L stainless steel sheet, molybdenum-enriched
MSF-A-... — AW-1050A H24 aluminium sheet
MSF-CU-... — M1E z4 copper sheet

Product code example

Product code: **MSF - aaa**

type
Ød

Dimensions

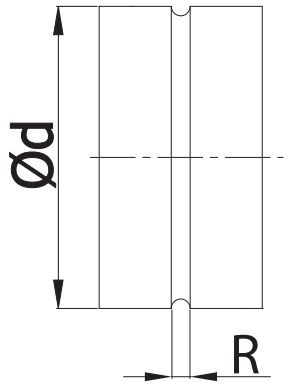

$Ød_{nom}$ (mm)	Stop fold R (mm)	Weight (kg)
80	8	0.08
100	8	0.10
125	8	0.12
140	8	0.14
150	8	0.15
160	8	0.16
180	8	0.18
200	8	0.20
224	8	0.22
250	8	0.24
280	8	0.27
300	8	0.29
315	8	0.30
355	8	0.53
400	8	0.60
450	8	0.90
500	8	1.00
560	8	1.33
600	8	1.43
630	8	1.50
710	10	2.60
800	10	2.95
900	12	3.30
1000	12	5.40
1120	12	6.05
1250	12	6.75
1400	12	8.40
1500	12	9.00
1600	12	9.60

ALNOR® ventilation systems
is a registered trademark protected by a technical patent. All modification rights reserved.

Male-to-female coupling for ventilation fittings

SMSFL



Description

SMSFL units are long male-to-female couplings for connecting ventilation fittings. They can be used for connecting fittings to spiral ducts without a press-in stop. If there is no press-in stop in the ducts, the end's insertion length can be freely adjusted. It is a popular solution for ventilation ducts continuously exposed to temperature variations which affect thermal expansion and shrinking of the ductwork. The fitting is also perfect for connecting fire dampers to the ductwork.

Available materials — Product code example

SMSFL-... -... – galvanized steel sheet
SMSFL-K-...-... — 1.4301/304 stainless steel sheet
SMSFL-K-...-...-316L — 1.4404/316L stainless steel sheet, molybdenum-enriched
SMSFL-A-...-... — AW-1050A H24 aluminium sheet
SMSFL-CU-...-... — M1E z4 copper sheet

Product code example

Product code: **SMSFL- aaa - bbb**

type
Ød
L

Dimensions

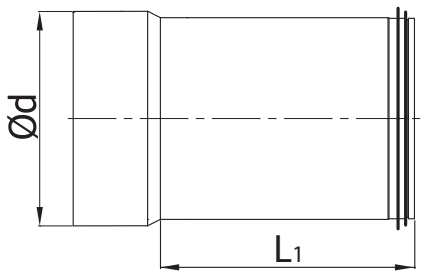

Ød$_{nom}$ (mm)	L$_{nom}$ (mm)	L$_1$ (mm)	Weight (kg)
80	150	127	0.19
80	300	288	0.34
80	500	552	0.60
100	150	127	0.24
100	300	288	0.42
100	500	552	0.75
125	150	127	0.30
125	300	288	0.52
125	500	552	0.93
140	150	127	0.33
140	300	288	0.59
140	500	552	1.05
150	150	127	0.35
150	300	288	0.63
150	500	552	1.12
160	150	127	0.38
160	300	288	0.67
160	500	552	1.20
180	150	127	0.42
180	300	288	0.76
180	500	552	1.34
200	150	127	0.47
200	300	288	0.85
200	500	552	1.50
224	150	127	0.53
224	300	288	0.95
224	500	552	1.67
250	150	192	0.72
250	300	302	1.10
250	500	537	1.80

ALNOR® ventilation systems
is a registered trademark protected by a technical patent. All modification rights reserved.

Male-to-female coupling for ventilation fittings

SMSFL

Dimensions

$Ød_{nom}$ (mm)	L_{nom} (mm)	L_1 (mm)	Weight (kg)
280	150	192	0.80
280	300	302	1.22
280	500	537	2.00
300	150	192	0.86
300	300	302	1.30
300	500	537	2.16
315	150	182	0.90
315	300	297	1.33
315	500	537	2.27
355	150	182	1.10
355	300	297	1.60
355	500	537	2.65
400	300	242	1.52
400	500	500	2.90
450	300	242	1.82
450	500	503	3.27
500	300	242	2.05
500	500	503	3.64
630	300	300	1.40
630	500	500	4.35

ALNOR® ventilation systems
is a registered trademark protected by a technical patent. All modification rights reserved.

Flat pressed branch with radius

ILPRL

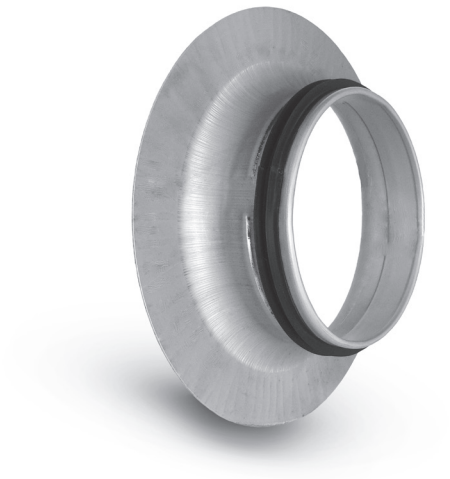

Description

ILPRL branches enable connecting spiral ducts or flexible ducts and square ducts. The bevel at the joint and the pressed structure provide an excellent air flow resistance. The wide hemming makes installation quick and easy. The safe-edge rim and the gasket provide a high air tightness class according to EN 12237.

Available materials — Product code example
ILPRL-... – galvanized steel sheet

Product code example
Product code: **ILPRL- aaa**

type
Ød

Dimensions

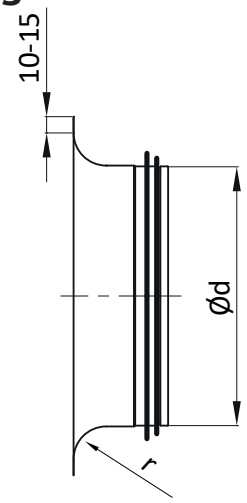

$Ød_{nom}$ (mm)	r (mm)	Weight (kg)
80	12	0.10
100	15	0.20
125	20	0.20
150	20	0.20
160	25	0.30
200	25	0.40
250	25	0.60
315	25	0.70

ALNOR® ventilation systems
is a registered trademark protected by a technical patent. All modification rights reserved.

Flat pressed branch with radius without gaskets

ILPR



Description

ILPR branches offer a perfect solution for fabricating ventilation ductwork joints at heat recuperation units in single- and multi-family houses. The bevel at the joint and the pressed structure provide an excellent air flow resistance. ILPR branches can be fitted with a gasket; ILPRL branches are provided with a factory-installed gasket on the flange.

ILPR-...-C pressed flat branches with radius have raw edges for fabrication of heat recuperation units, ducted air handling units, hot water coils, and other ventilation units.

Available materials — Product code example
ILPR-... – galvanized steel sheet

Product code example
Product code: **ILPR - aaa**

type
Ød

Dimensions

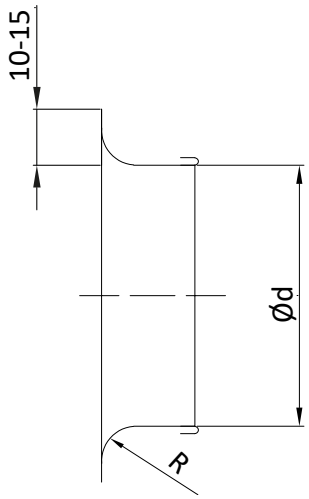

$Ød_{nom}$ (mm)	r (mm)	Weight (kg)
80	12	0.10
100	15	0.20
125	20	0.20
150	25	0.20
160	25	0.30
200	25	0.40
250	25	0.60
315	25	0.70

ALNOR® ventilation systems
is a registered trademark protected by a technical patent. All modification rights reserved.

Flat pressed straight branch with gasket

ILPL



Description

Flat straight branches are designed for connecting round SPIRAL or plain ducts to the main square ducts. This piece is also used for fabrication of expansion boxes in air supply diffusers and wall-mounted and ceiling air diffusers. As a result of the double EPDM rubber gasket, it is perfect for both low- and high-pressure systems, since the product meets requirements for air tightness class D according to EN12237.

Available materials - Product code example
ILPL-... - galvanized steel sheet

Product code example
Product code: **ILPL - aaa**

type
Ød

Dimensions

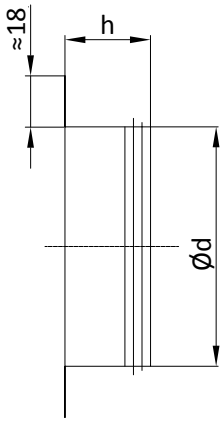

$Ød_{nom}$ (mm)	h (mm)	tolerance (mm)		Weight (kg)
80	42	0	-3	0.10
100	42	0	-3	0.10
125	42	0	-3	0.10
150	42	0	-3	0.10
160	42	0	-3	0.10
200	42	0	-3	0.20

ALNOR® ventilation systems
is a registered trademark protected by a technical patent. All modification rights reserved.

Flat pressed straight branch without gasket
ILP



Description

Flat pressed galvanized sheet straight branches without gaskets are used for fabrication of expansion boxes in air supply diffusers, and wall-mounted and ceiling air diffusers. The sizes 63, 75 and 90 mm are prefabricated for FLX plenum boxes installed with FLX-HDPE ducts in FLX-REKU air distribution systems concealed beneath suspended ceiling panels or raised floors. ILPF units are available with female-end flanges. The flange can be fitted with a gasket; ILPL units are provided with factory-installed EPDM gaskets on the flange.

ILP-...-C units have bare edges for fabrication of expansion and diffuser boxes and other ventilation system components.

Available materials — Product code example
ILP-... – galvanized steel sheet

Product code example
Product code: **ILP - aaa**

type
Ød

Dimensions

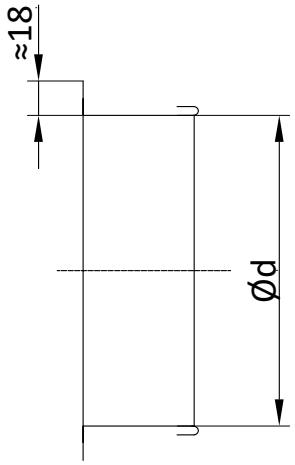

$Ød_{nom}$ (mm)	Weight (kg)
80	0.10
100	0.10
125	0.10
150	0.10
160	0.10
200	0.20

ALNOR® ventilation systems
is a registered trademark protected by a technical patent. All modification rights reserved.

Flat segmented straight branch with gasket
ILSL



Description

Flat straight branches are designed for connecting round SPIRAL or plain ducts to the main square ducts. This piece is also used for fabrication of plenum boxes in air supply diffusers and wall-mounted and ceiling air diffusers. As a result of the double EPDM rubber gasket, it is perfect for both low- and high-pressure systems, since the product meets requirements for air tightness class D according to EN 12237.

Available materials — Product code example

ILSL-... — galvanized steel sheet
ILSL-K-... — 1.4301/304 stainless steel sheet
ILSL-K-...- 316L — 1.4404/316L stainless steel sheet, molybdenum-enriched
ILSL-A-... — AW-1050A H24 aluminium sheet
ILSL-CU-... — M1E z4 copper sheet

Product code example

Product code: **ILSL - aaa - bbb**

type
Ød
length

Dimensions

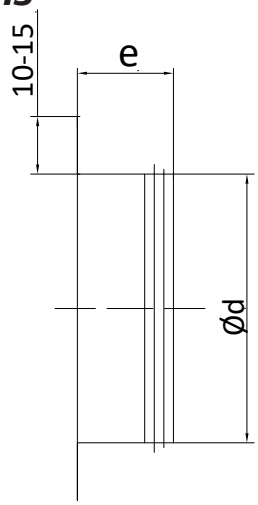

Product code	Ød (mm)	e (mm)	Length L			
			44 (mm)	50 (mm)	73 (mm)	90 (mm)
ILSL-140	140	30-36	Yes	Yes	Yes	Yes
ILSL-150	150	30-36	Yes	Yes	Yes	Yes
ILSL-160	160	30-36	Yes	Yes	Yes	Yes
ILSL-180	180	30-36	Yes	Yes	Yes	Yes
ILSL-200	200	30-36	Yes	Yes	Yes	Yes
ILSL-224	224	30-36	Yes	Yes	Yes	Yes
ILSL-250	250	30-36	Yes	Yes	Yes	Yes
ILSL-280	280	30-36	Yes	Yes	Yes	Yes
ILSL-300	300	30-36	Yes	Yes	Yes	Yes
ILSL-315	315	30-36	Yes	Yes	Yes	Yes
ILSL-355	355	50-55	–	–	Yes	Yes
ILSL-400	400	50-55	–	–	Yes	Yes
ILSL-450	450	70-75	–	–	–	Yes
ILSL-500	500	70-75	–	–	–	Yes
ILSL-560	560	70-75	–	–	–	Yes
ILSL-600	600	70-75		–	–	Yes
ILSL-630	630	70-75	–	–	–	–
ILSL-710	710	90-100	–	–	–	–
ILSL-800	800	90-100	–	–	–	–
ILSL-900	900	90-100	–	–	–	–
ILSL-1000	1000	105-115		–	–	
ILSL-1120	1120	105-115	–	–	–	
ILSL-1250	1250	105-115	–	–	–	

Tolerance: ±2 mm

ALNOR® ventilation systems
is a registered trademark protected by a technical patent. All modification rights reserved.

Flat segmented straight branch without gasket

ILS



Description

ILS flat segmented galvanized sheet straight branches without gaskets are used for fabrication of plenum boxes in air supply diffusers, and wall-mounted and ceiling air diffusers. The sizes 63, 75 and 90 mm are prefabricated for FLX plenum boxes installed with FLX-HDPE ducts in FLX-REKU air distribution systems concealed beneath suspended ceiling panels or raised floors. ILS branches can be expanded to match the joined diameter, and there are ILSF branches provided with factory-installed female ends. The branch can be fitted with a gasket; ILSL branches are provided with factory-installed EPDM gaskets on the branch.

Available materials — Product code example

ILS-... — galvanized steel sheet
ILS-K-... — 1.4301/304 stainless steel sheet
ILS-K-...- 316L — 1.4404/316L stainless steel sheet, molybdenum-enriched
ILS-A-... — AW-1050A H24 aluminium sheet
ILS-CU-... — M1E z4 copper sheet

Product code example

Product code: **ILS - aaa**

type
Ød

Dimensions

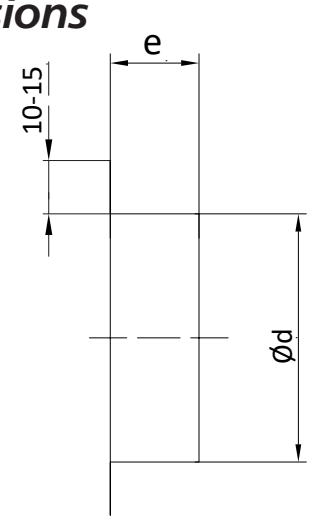

Product code	Ød (mm)	e (mm)	Length L		
			40 (mm)	50 (mm)	80 (mm)
ILS-140	140	30-36	Yes	Yes	Yes
ILS-150	150	30-36	Yes	Yes	Yes
ILS-160	160	30-36	Yes	Yes	Yes
ILS-180	180	30-36	Yes	Yes	Yes
ILS-200	200	30-36	Yes	Yes	Yes
ILS-224	224	30-36	Yes	Yes	Yes
ILS-250	250	30-36	Yes	Yes	Yes
ILS-280	280	30-36	Yes	Yes	Yes
ILS-300	300	30-36	Yes	Yes	Yes
ILS-315	315	30-36	–	–	Yes
ILS-355	355	50-55	–	–	Yes
ILS-400	400	50-55	–	–	–
ILS-450	450	70-75	–	–	–
ILS-500	500	70-75	–	–	–
ILS-560	560	70-75	–	–	–
ILS-600	600	70-75		–	–
ILS-630	630	70-75	–	–	–
ILS-710	710	90-100	–	–	–
ILS-800	800	90-100	–	–	–
ILS-900	900	90-100	–	–	–
ILS-1000	1000	105-115		–	–
ILS-1120	1120	105-115	–	–	–
ILS-1250	1250	105-115	–	–	–

Tolerance: ±2 mm

ALNOR® ventilation systems
is a registered trademark protected by a technical patent. All modification rights reserved.

Flat segmented branches for female end fabrication

ILSF



Description

This branch allows connecting round fittings with rectangular ducts. The piece is installed by cutting an opening in the wall of a square duct, in which the upstand side is fitted towards the duct and fastened with self-drilling screws or rivets. The take-off port can be then connected directly to a bend, a T-piece, or a damper. The solution helps to save installation space and reduce the installation costs. The piece is suitable for fittings with and without gaskets.

The branch is manufactured from seam-welded segments.

Available materials — Product code example

ILSF-... — galvanized steel sheet
ILSF-K-... — 1.4301/304 stainless steel sheet
ILSF-K-...-316L — 1.4404/316L stainless steel sheet, molybdenum-enriched
ILSF-A-... — AW-1050A H24 aluminium sheet
ILSF-CU-... — M1E z4 copper sheet

Product code example

Product code: **ILSF - aaa - bbb**

type
Ød
length

Dimensions

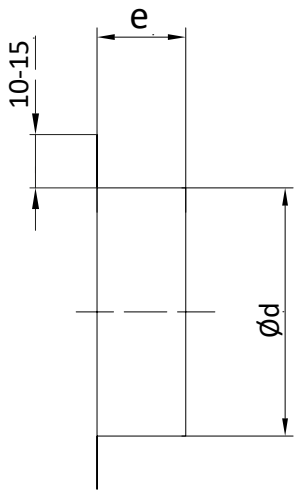

Product code	Ød (mm)	e (mm)	Length L		
			40 (mm)	50 (mm)	80 (mm)
ILSF-140	140	30-36	Yes	Yes	Yes
ILSF-150	150	30-36	Yes	Yes	Yes
ILSF-160	160	30-36	Yes	Yes	Yes
ILSF-180	180	30-36	Yes	Yes	Yes
ILSF-200	200	30-36	Yes	Yes	Yes
ILSF-224	224	30-36	Yes	Yes	Yes
ILSF-250	250	30-36	Yes	Yes	Yes
ILSF-280	280	30-36	Yes	Yes	Yes
ILSF-300	300	30-36	Yes	Yes	Yes
ILSF-315	315	30-36	–	–	Yes
ILSF-355	355	50-55	–	–	Yes
ILSF-400	400	50-55	–	–	–
ILSF-450	450	70-75	–	–	–
ILSF-500	500	70-75	–	–	–
ILSF-560	560	70-75	–	–	–
ILSF-600	600	70-75		–	–
ILSF-630	630	70-75	–	–	–
ILSF-710	710	90-100	–	–	–
ILSF-800	800	90-100	–	–	–
ILSF-900	900	90-100	–	–	–
ILSF-1000	1000	105-115		–	–
ILSF-1120	1120	105-115	–	–	–
ILSF-1250	1250	105-115	–	–	–

Tolerance: ±2 mm

Angle take-off for round-to-square duct joints

ILSV-45/ILSVL-45



Description

ILSV and ILSVL take-offs are male-ended fittings, and similarly to ILSL units, they are designed for connecting round ducts and square ducts. The difference from ILSL units is that the take-off collar is inclined at 45 degrees for an improved air flow rate and a reduced flow resistance. The take-offs can be ordered with a different angle from 15 to 80 degrees.

ILSV-45 - angle take-off without a gasket
ILSVL-45 - angle take-off with an EPDM gasket, air tightness class D acc. to EN 12237

Available materials - Product code example
ILSV-45-... - galvanized steel sheet
ILSV-45-K-... - 1.4301/304 stainless steel sheet
ILSV-45-K-...- 316L - 1.4404/316L stainless steel sheet, molybdenum-enriched
ILSV-45-A-... - AW-1050A H24 aluminum sheet
ILSV-45-CU-... - M1E z4 copper sheet

Product code example
Product code: **ILSV-45 - aaa**

type
Ød$_1$

Dimensions

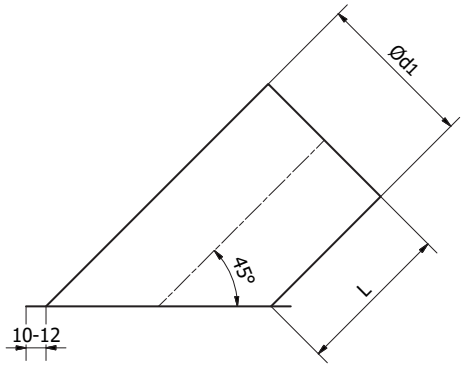

Ød$_{1\ nom}$ (mm)	L (mm)	Weight (kg)
80	78	0.10
100	94	0.13
125	113	0.18
140	121	0.22
150	125	0.25
160	130	0.27
180	140	0.30
200	150	0.40
224	160	0.50
250	245	0.65
280	209	0.75
300	219	0.85
315	225	0.95
355	246	1.35
400	289	1.80
450	313	2.70
500	338	3.30
560	368	4.00
600	388	4.50
630	403	4.90
710	468	7.50
800	513	9.40
900	563	11.60
1000	628	15.80
1120	688	19.60
1250	753	24.00

ALNOR® ventilation systems
is a registered trademark protected by a technical patent. All modification rights reserved.

Angle take-off with mesh

ASV-45/ASVL-45



Description

ASV / ASVL take-offs are male-ended fittings to be inserted directly into round SPIRAL or plain ducts. The 12.7x12.7 mm mesh installed right behind the duct end secures the exhaust against birds, large insects, leaves or debris. The 45-degree cut end forms a canopy against rain and snow, with an added value of a neat finish. ASV-45 units are available with female ends on request for connecting the take-off with a ventilation bend.

ASV-45 - Angle take-off with a mesh and without a gasket
ASVL-45 - Angle take-off with a mesh and an EPDM gasket

Available materials — Product code example
ASV-45-... – galvanized steel sheet
ASV-45-K-... — 1.4301/304 stainless steel sheet
ASV-45-K-...- 316L — 1.4404/316L stainless steel sheet, molybdenum-enriched
ASV-45-A-... — AW-1050A H24 aluminium sheet
ASV-45-CU-... — M1E z4 copper sheet

Product code example
Product code: **ASV-45 - aaa**

type
Ød$_1$

Dimensions

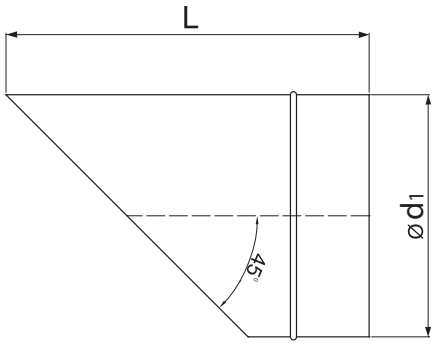

Ød$_{1\ nom}$ (mm)	L (mm)	Weight (kg)
125	198	0.24
140	210	0.29
150	221	0.32
160	230	0.35
180	250	0.41
200	270	0.48
224	294	0.57
250	373	0.98
280	402	1.16
315	438	1.39
355	482	1.77
400	547	2.28
450	627	3.59
500	677	4.23
560	737	5.04
630	807	6.10
710	948	10.00
800	1038	12.15
900	1136	14.66
1000	1251	17.95

* ASV: the standard end is male and without a gasket

ALNOR® ventilation systems
is a registered trademark protected by a technical patent. All modification rights reserved.

Take-off with mesh

ILSN/ILSNL



Description

ILSN / ILSNL take-offs are male-ended fittings to be inserted directly into round SPIRAL or plain ducts. The 12.7x12.7 mm mesh installed at the take-off end secures the air exhaust against birds, large insects, leaves or debris. This is the simplest form of ductwork termination with a minimum air intake/exhaust flow resistance. ILSN units are available with a female end on request for connection with a ventilation bend.

ILSN - take-off with a mesh and without a gasket
ILSNL - take-off with a mesh and an EPDM gasket

Available materials - Product code example
ILSN-... - galvanized steel sheet
ILSN-K-... - 1.4301/304 stainless steel sheet
ILSN-K-...- 316L - 1.4404/316L stainless steel sheet, molybdenum-enriched

Product code example
Product code: **ILSN - 160**

type
Ød

Dimensions

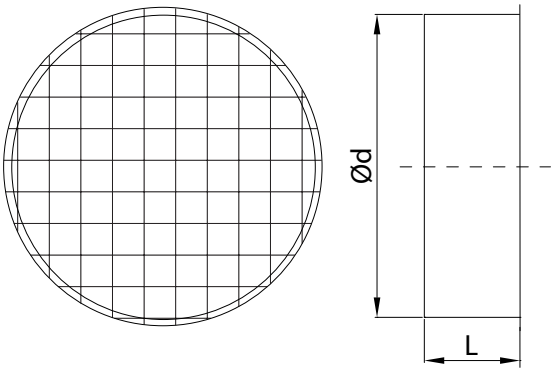

Type	Ød (mm)	L (mm)
ILSN-80	80	47
ILSN-100	100	47
ILSN-110	110	47
ILSN-125	125	47
ILSN-140	140	47
ILSN-150	150	47
ILSN-160	160	47
ILSN-180	180	47
ILSN-200	200	47
ILSN-224	224	47
ILSN-250	250	47
ILSN-280	280	47
ILSN-300	300	47
ILSN-315	315	47
ILSN-355	355	73
ILSN-400	400	93
ILSN-450	450	93
ILSN-500	500	93
ILSN-560	560	93
ILSN-600	600	93
ILSN-630	630	93
ILSN-710	710	122
ILSN-800	800	122
ILSN-900	900	122
ILSN-1000	1000	137
ILSN-1120	1120	137
ILSN-1250	1250	137

ALNOR® ventilation systems
is a registered trademark protected by a technical patent. All modification rights reserved.

Flexible duct connectors
ILA

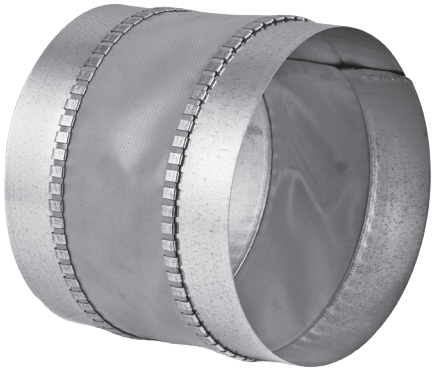

Description

ILA male-end flexible duct connectors are used for joining two round SPIRAL or plain ducts. They are most often used for connecting air handling units, heat recuperation units, and duct fans. The flexible duct connector deadens the vibration generated by the equipment to prevent vibration and noise in the ductwork and ensure improved acoustic performance of the ventilation system. The flexible piece is made from AMT balancing tape, a standalone product available in different sizes and materials, including a heat-resistant version.
The standard version is male.
The female-ended version is available on request for connecting two fittings.

Available materials — Product code example
ILA-... – galvanized steel sheet
ILA-KWS-... — 1.4301/304 stainless steel sheet

Product code example
Product code: **ILA - aaa**

type
Ød$_1$

Dimensions

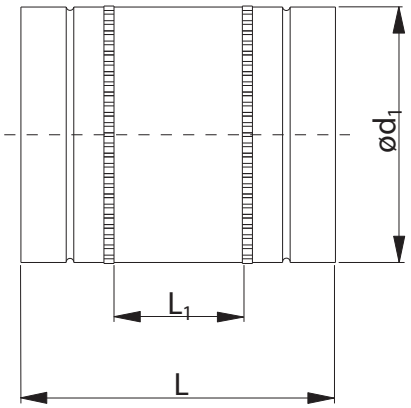

Ød$_{1\ nom}$ (mm)	L (mm)	L$_1$ (mm)
80	150	60
100	150	60
125	150	60
140	150	60
150	150	60
160	150	60
180	150	60
200	150	60
224	150	60
250	150	60
280	150	60
300	150	60
315	150	60
355	150	60
400	150	60
450	150	60
500	150	60
560	150	60
600	150	60
630	150	60
710	240	100
800	240	100

Length sizes available on request: 130, 165 mm.

ALNOR® ventilation systems
is a registered trademark protected by a technical patent. All modification rights reserved.

Flexible duct connectors with steel flanges

ILA-FLS



Description

ILA-FLS flexible duct connectors are based on ILA units provided with additional FLS steel flanges to improve their stiffness. They are most often used for connecting air handling units, heat recuperation units, and duct fans. The flexible duct connector deadens the vibration generated by the equipment to prevent vibration and noise in the ductwork and ensure improved acoustic performance of the ventilation system. The flexible piece is made from AMT balancing tape, a standalone product available in different sizes and materials, including a heat-resistant version.

Available materials - Product code example
ILA-K... – galvanized steel sheet
ILA-FLS-K-... - 1.4301/304 stainless steel sheet

Product code example
Product code: **ILA-FLS - aaa**

type
Ød$_1$

Dimensions

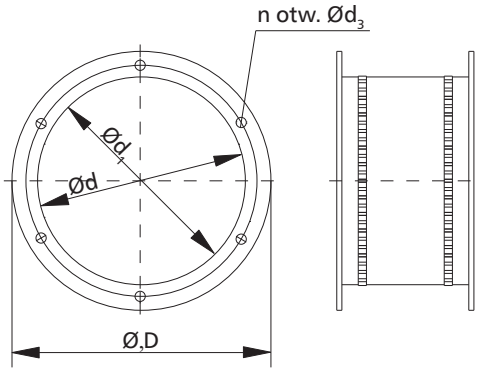

Ød$_1$ (mm)	ØD (mm)	Ød$_2$ (mm)	Ød$_3$ (mm)	n
80	132	112	9.5	4
100	152	132	9.5	4
125	177	157	9.5	4
140	192	172	9.5	6
150	202	185	9.5	6
160	212	192	9.5	6
180	232	212	9.5	6
200	253	233	9.5	6
224	277	257	9.5	6
250	303	283	9.5	6
280	343	317	9.5	8
300	363	339	9.5	8
315	378	352	9.5	8
355	418	392	9.5	8
400	464	438	9.5	8
450	514	488	9.5	8
500	564	538	9.5	8
560	634	600	9.5	12
600	676	641	9.5	12
630	704	670	9.5	12
710	784	750	9.5	12
800	874	840	9.5	16

Length sizes available on request: 100, 120, 210 mm.
L = 135 (standard)
L$_1$ = 75 (standard)

ALNOR® ventilation systems
is a registered trademark protected by a technical patent. All modification rights reserved.

Flexible sleeve with clamps

ILA-TK

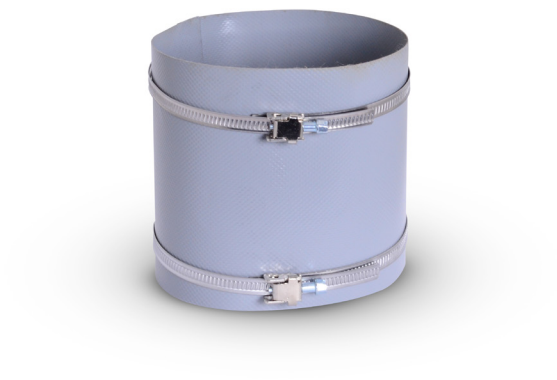

Description

ILA-TK is a flexible duct connector used for neutralizing vibrations in circular ventilation ducts caused by air handling units, fans and other HVAC equipment.
ILA-TK is a set of flexible fabric sleeve width 145 mm welded to the chosen diameter, and two clamps suitable to the size of the duct.
The clamps are made of stainless steel fastening bands and TKS-A locking devise with a screw made of carbon steel.
Apart from the anti-vibration properties, the flexible connector is highly adjustable - ILA-TKA can be slid over nonstandard duct diameters – e.g. 95 - 102 mm – useful when joining with other materials rather than standard metal spiral duct.

Available materials:
ILA-TK-PV - PVC coated fabric
ILA-TK-PU - polyurethane (PU) coated fabric

Product code example
Product code: **ILA-TK - aaa - bbb - ccc**

type
material
Ød
width

Dimensions

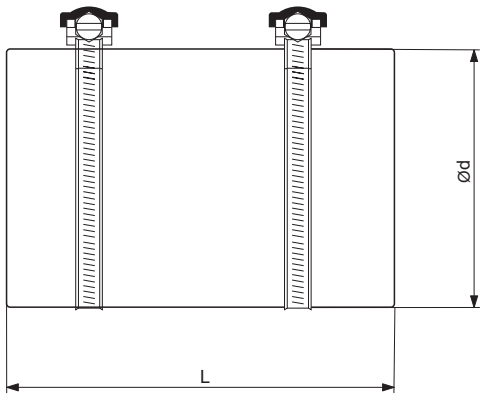

Product code	*Ød (mm)*	*L (mm)*
ILA-TK-…-100-145	100	145
ILA-TK-…-125-145	125	145
ILA-TK-…-150-145	150	145
ILA-TK-…-160-145	160	145
ILA-TK-…-180-145	180	145
ILA-TK-…-200-145	200	145
ILA-TK-…-225-145	225	145
ILA-TK-…-250-145	250	145
ILA-TK-…-280-145	280	145
ILA-TK-…-315-145	315	145
ILA-TK-…-355-145	355	145
ILA-TK-…-400-145	400	145
ILA-TK-…-450-145	450	145
ILA-TK-…-500-145	500	145
ILA-TK-…-560-145	560	145
ILA-TK-…-630-145	630	145

Standard fabric width: 145mm.
Other sizes on request (e.g. 160mm).

Installation method

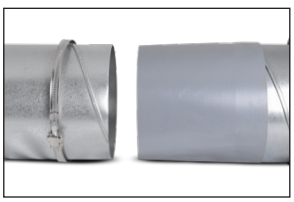

Put the band clips over the duct ends. Slide a PVC/PU-coated textile sleeve over the 30-40 mm of the duct (at both ends).



Bring both duct ends to the required gap (of ca. 15 mm) and tighten the textile sleeve with TKS-A band clips.

ALNOR® ventilation systems
is a registered trademark protected by a technical patent. All modification rights reserved.

Flexible duct connector with male ends

ILA-NSL



Description

Flexible anti-vibration duct connector is used for joining two spiral or plain round ducts. It has male ends and is equipped with a seal. The flexible part is made of AMT flexible duct connector - a joint consisting of a fiberglass cloth, coated with of PVC, polyurethane, neoprene or silicone coating and two strips of sheet metal on both sides. The flexible connector effectively suppresses the vibration in the ductwork and ensures very good airtightness. There are also available flexible duct connectors with increased temperature resistance.



Available materials:

ILA-NSL-PVC-… - galvanized steel sheet, PVC coated fabric
ILA-NSL-HI-T-… - galvanised steel sheet, silicone coated fabric
ILA-NSL-PU-… - galvanised steel sheet, polyurethane (PU) coated fabric
ILA-NSL-NEP-… - galvanised steel sheet, neoprene coated fabric

Product code example

Product code: **ILA-NSL - aaa - bbb**

type
fabric
Ød$_1$

Dimensions

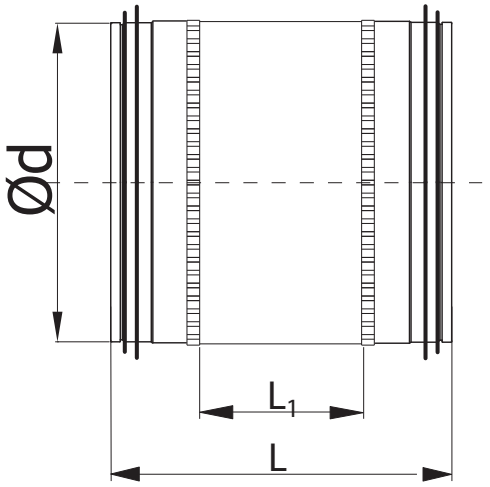

Ød$_1$ (mm)	L (mm)	L$_1$ (mm)
80	100	203
100	100	203
125	100	203
140	100	203
150	100	203
160	100	203
180	100	203
200	100	203
224	100	203
250	100	203
280	100	203
300	100	203
315	100	203
355	100	203

Other sizes (L,L$_1$) on request.

Technical Data

	Temperature ranger	Gasket	Characteristics
PVC	-30 °C / +80 °C	EPDM	General use, economical choice
Silicone (HI-T)	-30 °C / +260 °C	Silicone (red)	Resistance to high temperatures , high resistance to aging, weather conditions and chemical substances
Polyurethane (PU)	-30 °C / +180 °C	Silicone (red)	High abrasion resistance
Neoprene	-30 °C / +180 °C	Silicone (red)	Synthetic rubber, suitable for outdoor use, High resistance to alkalis and petrol

AMT flexible connection used for flexible duct connectors' production was tested at 400 °C for 2 hours (PU and HI-T material). None of the connectors suffered mechanical damage due to the heat treatment.

ALNOR® ventilation systems
is a registered trademark protected by a technical patent. All modification rights reserved.

Pressed plug end with gasket

CPSL



Description

Plug ends are pressed with a male end on the duct side to blind it at air tightness class D. The plug end rim is long enough to easily secure it with WGO screws without any risk of cutting the gasket's double lip.



CPSL plug ends are equipped with a stop fold which prevents inserting the fitting too deep into the duct.



Safe edges (rolled edges) allow the duct installer safer installation of the ductwork, by minimizing the possibility of cuts.

Available materials - Product code example

CPSL-... – galvanized steel sheet

Product code example

Product code: **CPSL - aaa**

type

Ød

Dimensions

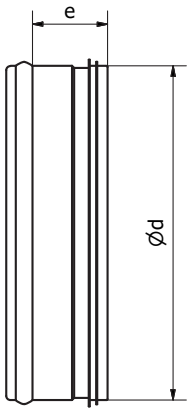

$Ød_{nom}$ (mm)	Weight (kg)
80	0.10
100	0.10
125	0.10
150	0.20
160	0.20
200	0.30
250	0.60

Installation method

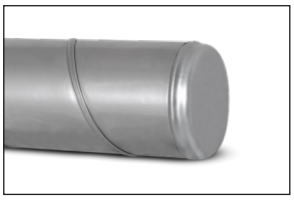

ALNOR® ventilation systems
is a registered trademark protected by a technical patent. All modification rights reserved.

Segmented end caps with gaskets

CSL



Description

The end cap is made of segments. The male end on the duct side blinds it at air tightness class D. The end cap rim is long enough to easily secure it with WGO screws without any risk of cutting the gasket's double lip.

Available materials - Product code example

CSL-... - galvanized steel sheet
CSL-K-... - 1.4301/304 stainless steel sheet
CSL-K-...- 316L - 1.4404/316L stainless steel sheet, molybdenum-enriched
CSL-A-... - AW-1050A H24 aluminium sheet
CSL-CU-... - M1E z4 copper sheet

Product code example

Product code: **CSL - aaa**

type
Ød

Installation method

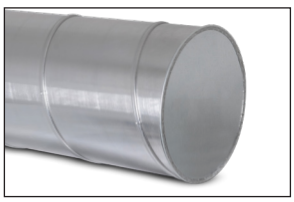

Dimensions

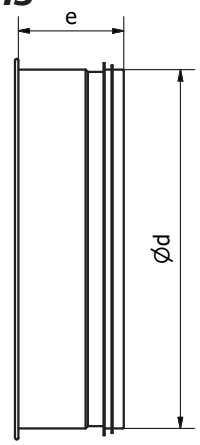

$Ød_{nom}$ (mm)	Weight (kg)
140	0.10
150	0.20
160	0.20
180	0.30
200	0.30
224	0.30
250	0.60
280	0.60
300	0.70
315	0.90
355	1.20
400	1.20
450	1.80
500	1.70
560	2.20
600	2.60
630	2.80
710	4.50
800	5.40
900	6.60
1000	7.90
1120	10.10
1250	12.20
1400	22.00
1500	25.70
1600	28.80

ALNOR® ventilation systems
is a registered trademark protected by a technical patent. All modification rights reserved.

Long pressed universal closure
CPNF



Description

The closure is pressed without gaskets. One end is male for insertion into a spiral duct. The other end is a long female connector for mounting on fittings with or without gaskets.

Available materials - Product code example
CPNF-... - galvanized steel sheet

Product code example
Product code: **CPNF - aaa**

type
Ød

Dimensions

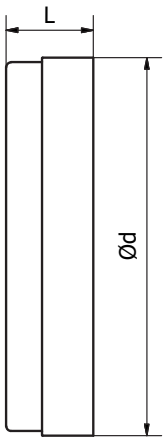

$Ød_{nom}$ (mm)	e (mm)	Weight (kg)
100	36	0.1
125	36	0.1
150	36	0.2
160	36	0.2
200	36	0.3
250	36	0.6

ALNOR® ventilation systems
is a registered trademark protected by a technical patent. All modification rights reserved.

Pressed plug end without a gasket

CPS



Description

The plug end is pressed. The plug end has a male end inserted into the duct to blind and seal its end. The class of air tightness can be improved by wrapping the end cap joint and the screws or rivets used to fasten it to the duct with the TAL, TALE, or DUCT sealing tape.
CPS plug ends are provided with a stop fold which prevents inserting the piece too deep into the duct.

Available materials - Product code example
CPS-... - galvanized steel sheet

Product code example
Product code: **CPS - aaa**

type
Ød

Dimensions

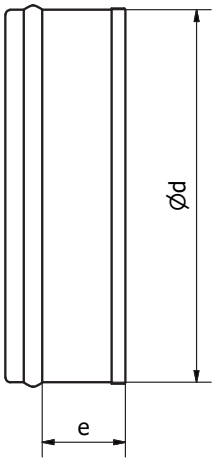

$Ød_{nom}$ (mm)	Weight (kg)
80	0.10
100	0.10
125	0.10
150	0.20
160	0.20
200	0.30
250	0.60
315	0.90

Installation method

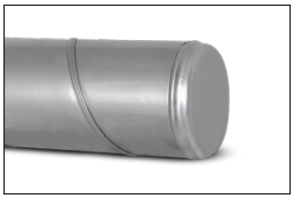

ALNOR® ventilation systems
is a registered trademark protected by a technical patent. All modification rights reserved.

Segmented plug end without a gasket
CS



Description

The plug end is made of segments. The end cap has a male end inserted into the duct to blind and seal its end. The class of air tightness can be improved by wrapping the plug end joint and the screws or rivets used to fasten it to the duct with the TAL, TALE, or DUCT sealing tape.

Available materials - Product code example

CS-... - galvanized steel sheet
CS-K-... - 1.4301/304 stainless steel sheet
CS-K-...- 316L - 1.4404/316L stainless steel sheet, molybdenum-enriched
CS-A-... - AW-1050A H24 aluminium sheet
CS-CU-... - M1E z4 copper sheet

Product code example

Product code: **CS - aaa**

type
Ød

Installation method

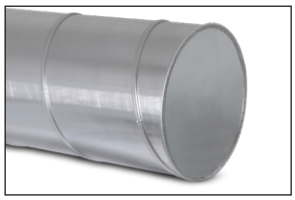

Dimensions

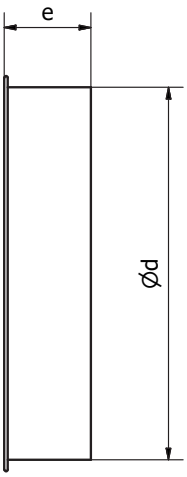

$Ød_{nom}$ (mm)	Weight (kg)
140	0.10
150	0.20
160	0.20
180	0.30
200	0.30
224	0.30
250	0.60
280	0.60
300	0.70
315	0.90
355	1.20
400	1.20
450	1.70
500	1.80
560	2.20
600	2.60
630	2.80
710	4.50
800	5.40
900	6.60
1000	7.90
1120	10.10
1250	12.20
1400	22.00
1500	25.70
1600	28.80

ALNOR® ventilation systems
is a registered trademark protected by a technical patent. All modification rights reserved.

Pressed universal closure

CP



Description

The CP closure is a pressed unit available without a gasket only. A part of the closure can be expanded for blinding round fittings.

Available materials - Product code example
CP-... - galvanized steel sheet

Product code example
Product code: **CP - aaa**

type
Ød

Dimensions

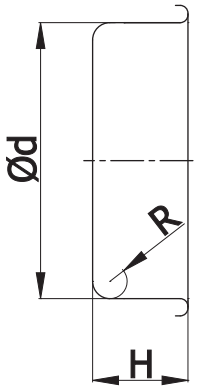

$Ød_{nom}$ (mm)	H (mm)	R (mm)	Weight (kg)
80	20	5	0.04
100	20	5	0.08
125	20	5	0.09
150	20	5	0.14
160	20	5	0.14
200	20	5	0.20
250	20	5	0.27
315	20	5	0.51

Installation method

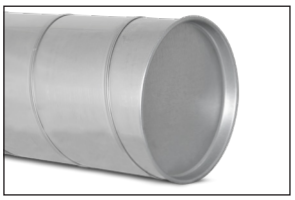

Assembly on a duct
Insert the closure into the duct



Assembly on a fitting
Put the eclosure over the fitting

ALNOR® ventilation systems
is a registered trademark protected by a technical patent. All modification rights reserved.

Pressed cap end without a gasket

CPF



Description

The cap end is pressed. The cap end is a female piece mounted at the end of a fitting with or without a gasket to blind it. The class of air tightness of a gasket-free joint can be improved by wrapping the end cap joint and the screws or rivets used to fasten it to the duct with the TAL, TALE, or DUCT sealing tape.

Available materials - Product code example
CPF-... - galvanized steel sheet

Product code example
Product code: **CPF - aaa**

type
Ød

Dimensions

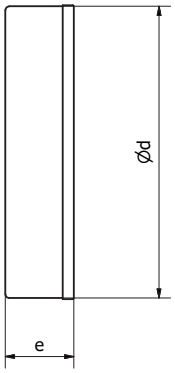

$Ød_{nom}$ (mm)	Weight (kg)
80	0.10
100	0.10
125	0.10
150	0.20
160	0.20
180	0.30
200	0.30
250	0.60

Installation method

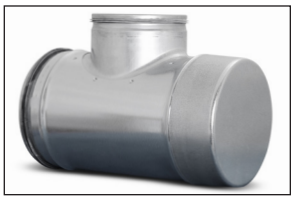

ALNOR® ventilation systems
is a registered trademark protected by a technical patent. All modification rights reserved.

Segmented end cap without a gasket

CSF



Description

The end cap is made of segments. The end cap is a female piece mounted at the end of a fitting with or without a gasket to blind it. The class of air tightness of a gasket-free joint can be improved by wrapping the end cap joint and the screws or rivets used to fasten it to the duct with the TAL, TALE, or DUCT sealing tape.

Available materials - Product code example

CSF-... - galvanized steel sheet
CSF-K-... - 1.4301/304 stainless steel sheet
CSF-K-...- 316L - 1.4404/316L stainless steel sheet, molybdenum-enriched
CSF-A-... - AW-1050A H24 aluminium sheet
CSF-CU-... - M1E z4 copper sheet

Product code example

Product code: **CSF - aaa**

type
Ød

Installation method



Dimensions

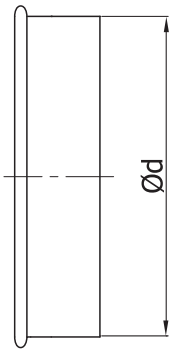

$Ød_{nom}$ (mm)	Weight (kg)
140	0.10
150	0.20
160	0.20
180	0.30
200	0.30
224	0.30
250	0.60
280	0.60
300	0.70
315	0.90
355	1.20
400	1.20
450	1.80
500	1.70
560	2.20
600	2.60
630	2.80
710	4.50
800	5.40
900	6.60
1000	7.90
1120	10.10
1250	12.20
1400	22.00
1500	25.70
1600	28.80

ALNOR® ventilation systems
is a registered trademark protected by a technical patent. All modification rights reserved.

Offsets

ODSOL/ODSO



Description

Round duct offsets help routing ductwork around obstacles. The offset height is standardized; however, the oblique tube length can be customized. The offset can also be fabricated with two 45 or 30-degree bends and a spiral duct section.

ODSO – round offset without a gasket
ODSOL – round offset with an EPDM gasket

Available materials — Product code example
ODSOL-... – galvanized steel sheet
ODSOL-K-... — 1.4301/304 stainless steel sheet
ODSOL-K-...- 316L — 1.4404/316L stainless steel sheet, molybdenum-enriched
ODSOL-A-... — AW-1050A H24 aluminium sheet
ODSOL-CU-... — M1E z4 copper sheet

Product code example
Product code: **ODSOL - aaa**

type
Ød

Dimensions

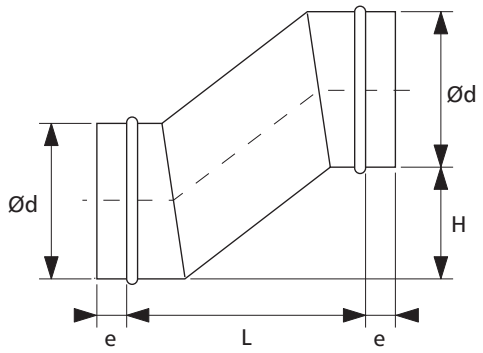

Ød$_{nom}$ (mm)	L (mm)	H (mm)	Weight (kg)
80	175	80	0.33
100	200	100	0.45
125	235	125	0.65
140	260	140	0.75
150	270	150	0.85
160	285	160	1.00
180	315	180	1.20
200	345	200	1.40
224	375	224	1.70
250	415	250	2.00
280	455	280	2.50
300	485	300	3.30
315	505	315	3.50
355	560	355	5.20
400	625	400	6.30
450	695	450	9.70
500	765	500	11.2
560	850	560	13.7
630	950	630	16.9
710	1065	710	26.6
800	1190	800	32.9
900	1335	900	40.6
1000	1475	1000	50.7
1120	1645	1120	69.6
1250	1830	1250	85.0

ALNOR® ventilation systems
is a registered trademark protected by a technical patent. All modification rights reserved.

Collars with gaskets for fabrication of ventilation fittings

GALA



Description

GALA collars are male pieces, the size of which matches other ventilation fittings. They are used for fabrication of segmented fittings, including bends, T-pieces, reducers, or dampers on a Gorelocker machine. This product is largely designed for manufacturers of ventilation fittings.

Available materials — Product code example

GALA-... – galvanized steel sheet
GALA-K-... — 1.4301/304 stainless steel sheet
GALA-K-...- 316L — 1.4404/316L stainless steel sheet, molybdenum-enriched
GALA-A-... — AW-1050A H24 aluminium sheet
GALA-CU-... — M1E z4 copper sheet

Product code example

Product code: **GALA - aaa**

type
Ød

Dimensions

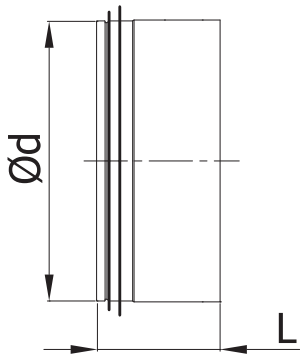

$Ød_{nom}$ (mm)	L (mm)	Weight (kg)
80	45	0.05
100	45	0.05
125	45	0.07
140	45	0.08
150	45	0.08
160	45	0.09
180	45	0.10
200	45	0.11
224	45	0.13
250	45	0.21
280	45	0.24
300	45	0.26
315	45	0.27
355	78	0.32
400	78	0.46
450	102	0.62
500	102	0.69
560	104	0.77
600	104	0.97
630	104	1.00
710	121	1.45
800	121	1.69
900	121	2.45
1000	121	3.00
1120	121	3.80
1250	121	4.25
1400	121	4.75
1500	121	5.10
1600	121	5.45

Custom length L available:
L = 54/60/65/75 mm.
All L-dimensions available on custom order.

ALNOR® ventilation systems
is a registered trademark protected by a technical patent. All modification rights reserved.

Double-lip gaskets for ventilation fittings

GASK



Description

GASK gaskets are made from EPDM. EDPM is a very durable material with superior resistance to ozone, UV light, and temperature variations. An EPDM gasket can withstand temperatures from -30˚C to +100˚C.

All GASK gaskets should be fitted and held tight in the fitting's hemmed rim. GASK gaskets provide fully sealed and durable joints. If installed as recommended, GASK gaskets provide superior air tightness class D (Certificate no. 0103/07 according to PN-EN 12237).

Product code example

Product code: **GASK - aaa**

type

Ød$_1$

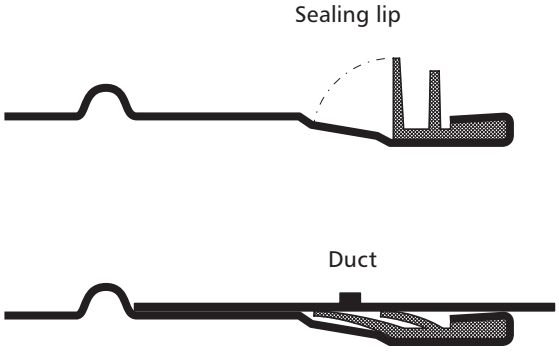

Dimensions

diameter range: 80-125

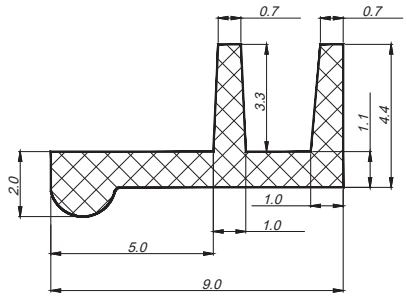

diameter range: 140-280

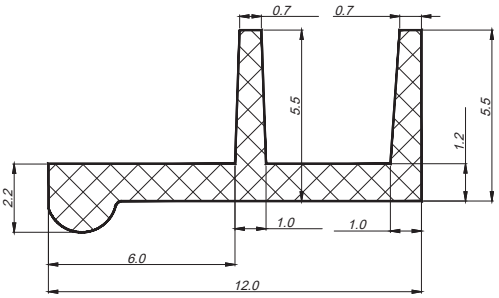

diameter range: 300-500

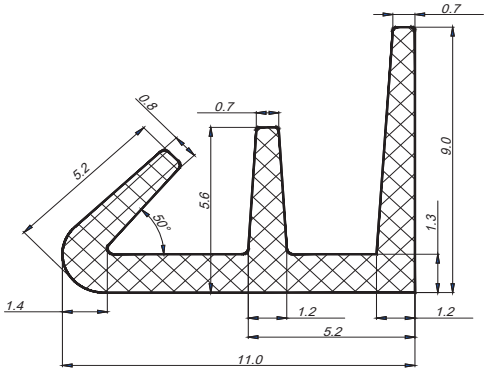

diameter range: 560-1600

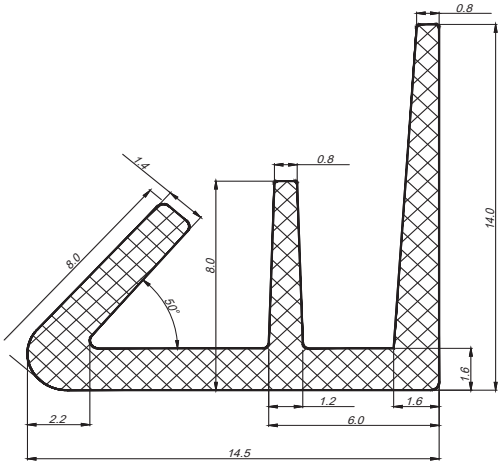

ALNOR® ventilation systems
is a registered trademark protected by a technical patent. All modification rights reserved.

Square spigot plates
KILL

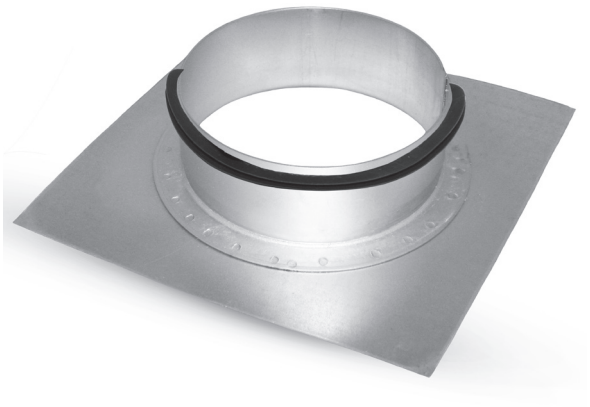

Dimensions

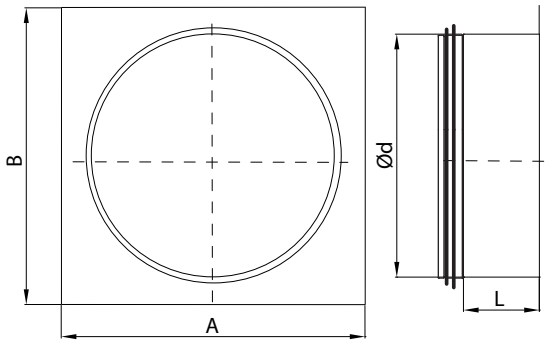

Type	Ød (mm)	A (mm)	B (mm)	L (mm)
KIL-80	80	160	160	30
KIL-100	100	160	160	30
KIL-125	125	180	180	30
KIL-150	150	210	210	30
KIL-160	160	220	220	30
KIL-180	180	260	260	30
KIL-200	200	260	260	30
KIL-250	250	320	320	30
KIL-315	315	360	360	30
KIL-355	355	470	470	53

Description

KILL square spigot plates can be installed in square duct walls. The round end is provided with an EPDM gasket. The product is made from galvanized steel sheet. Stainless steel and aluminium versions are available on request. The standard diameter is male. A female end is available on request.

Available materials — Product code example

KILL-... – galvanized steel sheet
KILL-K-... — 1.4301/304 stainless steel sheet
KILL-K-...- 316L — 1.4404/316L stainless steel sheet, molybdenum-enriched
KILL-A-... — AW-1050A H24 aluminium sheet
KILL-CU-... — M1E z4 copper sheet

Product code example

Product code: **KILL - 160**

type
Ød

ALNOR® ventilation systems
is a registered trademark protected by a technical patent. All modification rights reserved.

Square spigot plates
KIL

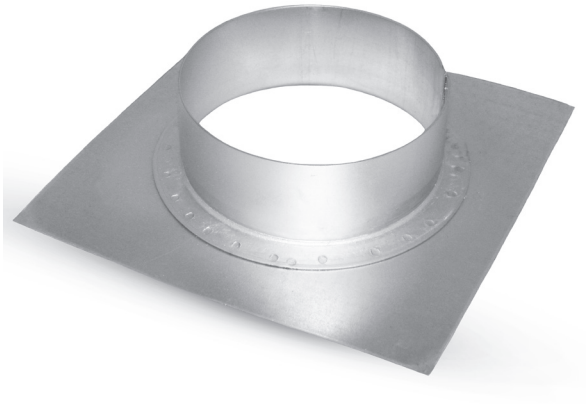

Dimensions

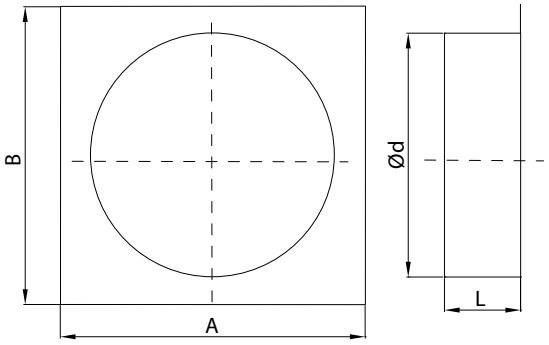

Type	Ød (mm)	A (mm)	B (mm)	L (mm)
KIL-80	80	160	160	30
KIL-100	100	160	160	30
KIL-125	125	180	180	30
KIL-150	150	210	210	30
KIL-160	160	220	220	30
KIL-180	180	260	260	30
KIL-200	200	260	260	30
KIL-250	250	320	320	30
KIL-315	315	360	360	30
KIL-355	355	470	470	53

Description

KIL square spigot plates can be installed in square duct walls. The product is made from galvanized steel sheet. Stainless steel and aluminium versions are available on request. The standard diameter is male. A female end is available on request.

Available materials — Product code example

KIL-... – galvanized steel sheet
KIL-K-... — 1.4301/304 stainless steel sheet
KIL-K-...- 316L — 1.4404/316L stainless steel sheet, molybdenum-enriched
KIL-A-... — AW-1050A H24 aluminium sheet
KIL-CU-... — M1E z4 copper sheet

Product code example

Product code: **KIL - 160**

type
Ød

ALNOR® ventilation systems
is a registered trademark protected by a technical patent. All modification rights reserved.

Ventilation accessories

ALNOR reserves the right to modify technical specifications in line with the policy of continuous product improvement.

ALNOR® ventilation systems
is a registered trademark protected by a technical patent. All modification rights reserved.

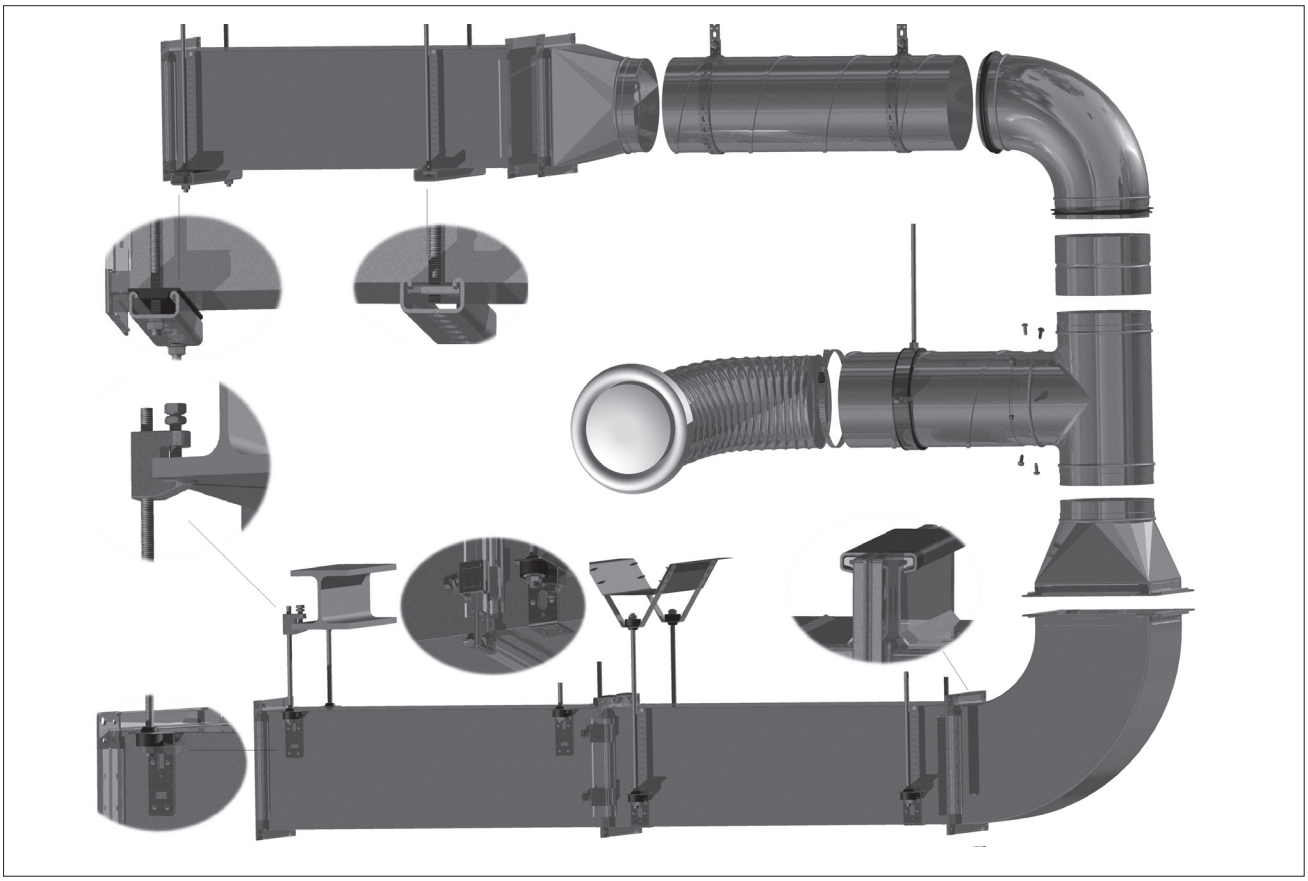

System description

Installation accessories include a range of fixtures and tools for easy and safe suspension of round and square ventilation ducts.

Dimensions

All sizes are shown in the tables and specifications in the individual Product Data Sheets.

Installation instructions

All components are specifically designed for specific types of ventilation ducts. The individual suspension components can be combined into an end-to-end ductwork installation system.

Application advantages

All components in this range are customized to the specific sizes, weight and features of ventilation ducts. The installation accessories are the right way for quick and easy fitting and adapting ductwork fixtures and fasteners to the actual on-site conditions.

Marking

ALNOR products carry the Polish conformity mark B for construction products and product codes as shown in the technical specifications listed in this catalogue.

Components of the FIX® system suspension are made from galvanized steel or stainless steel and they meet the requirements of the BRI (ITB) Technical Recommendation no. RT ITB - 1112/2008 Includes: EQVS, EQZS, EQLS, CLR, CLRL, TKN, KLQ, PG, TK, LDB, PB.

TÜVRheinland® CERTIFIED

is a registered trademark protected by a technical patent. All modification rights reserved.

Heavy-duty suspension rings

CLRL-C



Description

CLRL-C suspension rings with a damping liner are designed for installation of heavy steel pipes in the O.D. range of 16 to 252 mm. The damping liner is made of black noise-insulating EPDM rubber. Suspension ring are made from galvanized steel and suitable for setting up cooling, heating, and water supply pipe systems.

Available materials - Product code example
CLRL-C-... - galvanized steel sheet

Product code example
Product code: **CLRL-C - 3/8**

type
Ød

Dimensions

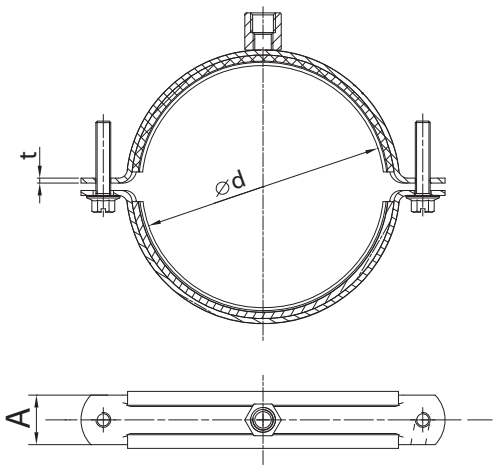

for 16 ≤ ød ≤ 63 rivetnut M8
for 75 ≤ ød ≤ 168 rivetnut M8, M10
for 198 ≤ ød ≤ 252 rivetnut M10

Type	*Ød (in)*	*Diameter range: (mm)*	*A (mm)*	*t (mm)*	*Weight (kg)*
CLRL-C-3/8	3/8	16-20	20	1.5	0.052
CLRL-C-1/2	1/2	20-24	20	1.5	0.059
CLRL-C-3/4	3/4	25-30	20	1.5	0.069
CLRL-C-1	1	32-37	20	1.5	0.072
CLRL-C-1 1/4	1 1/4	40-45	20	1.5	0.087
CLRL-C-1 1/2	1 1/2	48-53	20	1.5	0.097
CLRL-C-2	2	59-63	20	1.5	0.104
CLRL-C-2 1/2	2 1/2	75-80	25	2.0	0.198
CLRL-C-3	3	85-92	25	2.0	0.226
CLRL-C-3 1/2	3 1/2	95-103	25	2.0	0.245
CLRL-C-4	4	108-116	25	2.0	0.252
CLRL-C-5	5	135-141	25	2.0	0.334
CLRL-C-6	6	156-168	25	2.0	0.4
CLRL-C-200	–	198-202	30	3.0	0.723
CLRL-C-8	8	206-215	30	3.0	1.12
CLRL-C-10	10	248-252	30	3.0	1.275

ALNOR® ventilation systems
is a registered trademark protected by a technical patent. All modification rights reserved.

One-piece suspension ring for spiral ducts
CLRU



Description

One-piece suspension rings are designed for installation of round spiral ducts and plain round ducts. The lugs at the top of the suspension ring top are tied together with a steel bolt and a matching nut. The suspension ring's form enhances the stiffness of the ductwork clamped within and provides an easy way of fastening the suspension ring to steel structures. Suspension rings are also an ideal solution for ducts insulated after their suspension, because they can be fully covered by aluminium foil-clad or rubber insulation.

Available materials — Product code example

CLRU-...-... — galvanized steel sheet
CLRU-K-...-... — 1.4301/304 stainless steel sheet
CLRU-K-...-...-316L — 1.4404/316L stainless steel sheet, molybdenum-enriched

Product code example

Product code: **CLRU - 160 - 120**

type
Ød$_1$
thickness t

Dimensions

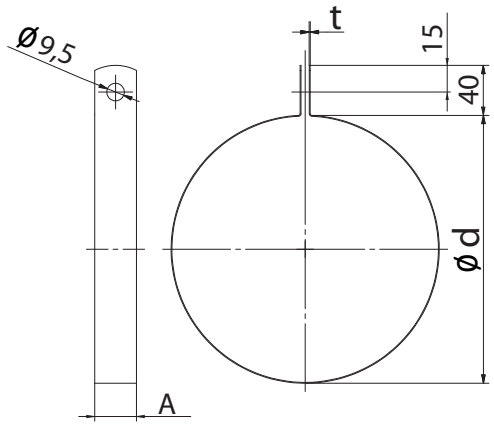

Ød (mm)	A (mm)	t (mm)	A (mm)	t (mm)
80	25	2.0	30	1.2
100	25	2.0	30	1.2
125	25	2.0	30	1.2
140	25	2.0	30	1.2
150	25	2.0	30	1.2
160	25	2.0	30	1.2
180	25	2.0	30	1.2
200	25	2.0	30	1.2
224	25	2.0	30	1.2
250	25	2.0	30	1.2
280	25	2.0	30	1.2
300	25	2.0	30	1.2
315	25	2.0	30	1.2
355	25	2.0	30	1.2
400	25	2.0	30	1.2
450	25	2.0	30	1.2
500	25	2.0	30	1.2
560	25	2.0	30	1.2
600	25	2.0	30	1.2
630	25	2.0	30	1.2
710	25	2.0	30	1.2
800	25	2.0	30	1.2

ALNOR® ventilation systems
is a registered trademark protected by a technical patent. All modification rights reserved.

Two-piece suspension ring for ventilation ducts

CLRL/CLR

For diameters Ød$_1$ ≤ 400 mm



For diameters Ød$_1$ ≥ 450 mm



Description

CLRL/CLR suspension rings are two-piece circular clamps fastened together with a pair of steel bolts. One of the fastening lug pairs is latched in the suspension rings of up to 400 mm in diameter to increase the ease of clamping around the ventilation duct. Suspension rings in this diameter range are installed with an M8/M10 (CLRL-K/CLR-K only M8) rivet nut on a threaded rod or a stud bolt. Suspension rings in the diameter range d < 450 mm need to be fastened with two threaded rods. As a result, rivet nuts are not required for these product sizes. Installation bolts and nuts are included.

CLR - two-piece suspension ring
CLRL - two-piece suspension ring with an EPDM damping liner.

Available materials - Product code example

CLRL-...	- galvanized steel sheet
CLRL-K-...	- 1.4301/304 stainless steel sheet
CLRL-K-...-316L	- 1.4404/316L stainless steel sheet, molybdenum-enriched

Product code example

Product code: **CLRL - aaa**

type
Ød

Dimensions

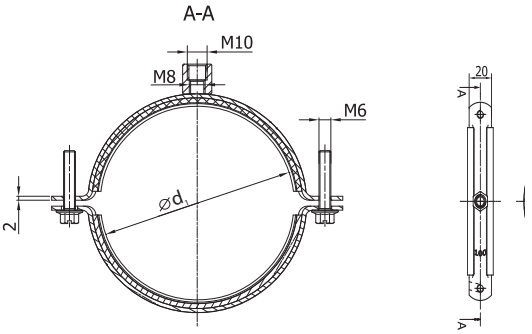

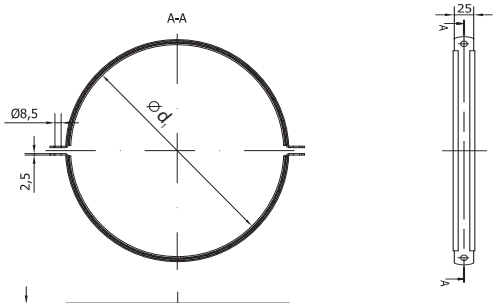

*Suspension rings in diameters of d$_1$ ≥ 450 mm are made without rivet nuts and suspended with two PG threaded rods. Installation bolts and nuts are included.

Recommended spacing: ca. 2 metres

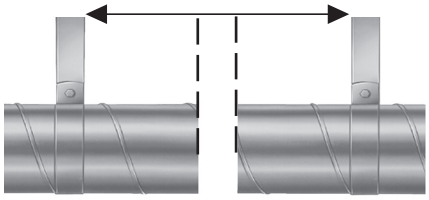

Ød$_{1\ nom}$ (mm)	Weight (kg)	Ød$_{1\ nom}$ (mm)	Weight (kg)
80	0.2	400	0.5
100	0.2	450	0.6
112	0.2	500	0.6
125	0.2	560	0.7
140	0.2	600	0.7
150	0.2	630	0.8
160	0.2	710	0.9
180	0.3	800	1.1
200	0.3	900	1.2
224	0.3	1000	1.3
250	0.3	1120	1.5
280	0.3	1250	1.6
300	0.4	1400	1.9
315	0.4	1500	2.0
355	0.5	1600	2.2

ALNOR® ventilation systems
is a registered trademark protected by a technical patent. All modification rights reserved.

Perforated suspension tape for round ducts

PB



Description

PB perforated suspension tape is designed for fastening round ventilation ducts.
This is an ideal solution whenever a fine adjustment of suspension height and level is required, or when regular suspension rings are not feasible.

Available materials — Product code example
PB-... — galvanized steel sheet

Product code example
Product code: **PB17-06**

type

Dimensions

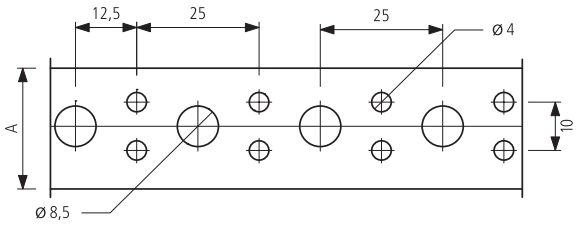

Type	*A* *(mm)*	*L* *(m)*	*Thickness* *(mm)*
PB 17-06	17	25	0.6
PB 17-06-10	17	10	0.6
PB 19-06	19	25	0.6
PB 25-08	25	25	0.8

ALNOR® ventilation systems
is a registered trademark protected by a technical patent. All modification rights reserved.

Round duct suspension bracket

EQRS



Description

R-type duct suspension brackets are designed for round ventilation ducts. The duct suspension bracket is fastened via its shock-absorber sleeve to the duct surface with a self-drilling screw.

Available materials — Product code example
EQRS — galvanized steel sheet
EQRS-K — 1.4301/304 stainless steel sheet

Product code example
Product code: **EQRS**

type

Dimensions

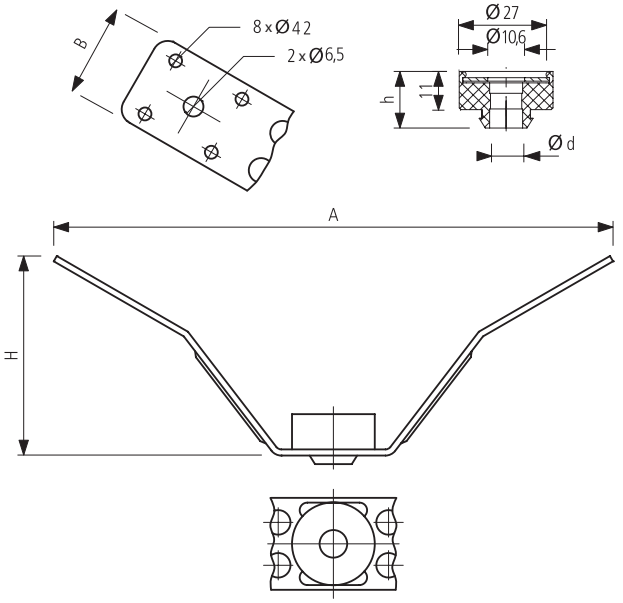

A (mm)	B (mm)	H (mm)	h (mm)	Ød (mm)
182.5	30	65	16.3	9

Installation method





ALNOR® ventilation systems
is a registered trademark protected by a technical patent. All modification rights reserved.

Duct brackets
EQVS

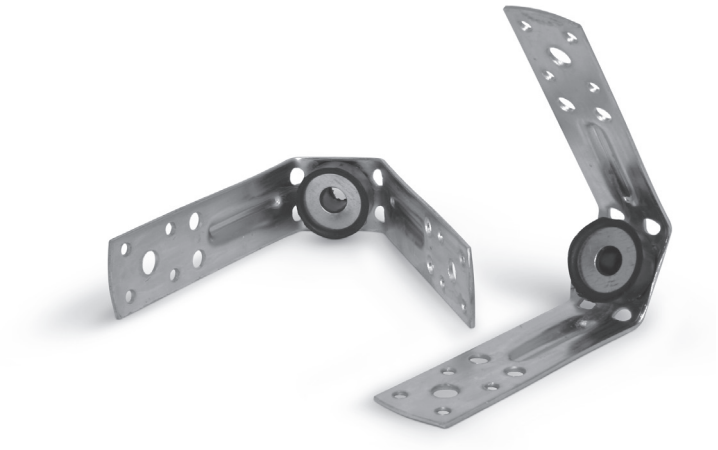

Description

Suitable for reliable and easy assembly of all types of duct systems. With the V-type trapezium suspension you can suspend various components from a trapezium sheet metal roof structure using self-tapping screws. Thickness: 1.9 mm.

Available materials - Product code example
EQVS - galvanized steel sheet
EQVS-K - 1.4301/304 stainless steel sheet

Product code example
Product code: **EQVS**

type

Dimensions

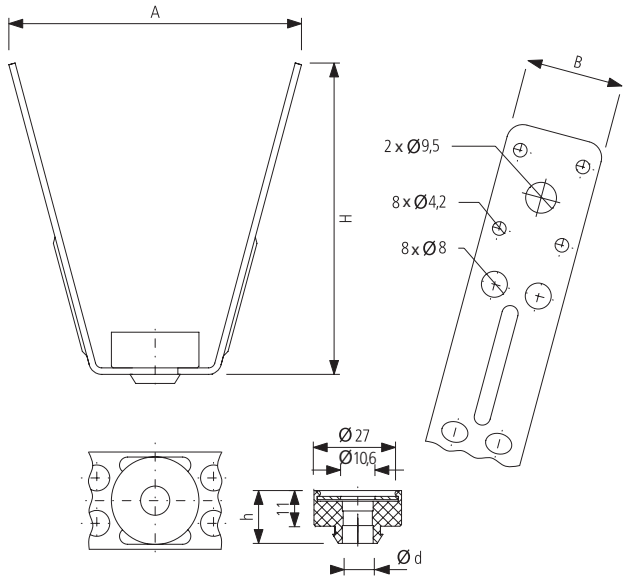

A [mm]	B [mm]	H [mm]	h [mm]	Ød [mm]
84	30	95	18,9	10

Type	SCharacteristic load F_k (kN)	Recommended load F_z (kN)
EQVS	1.0	0.5

ALNOR® ventilation systems
is a registered trademark protected by a technical patent. All modification rights reserved.

Rectangular duct suspension bracket

EQZS



Description

This type of duct suspension bracket is a quick-to-install fastener for square ventilation ducts, especially when the suspension system includes threaded rods and self-drilling screws. The duct suspension bracket is fastened only to the underside of the duct to improve the ductwork load capacity and provide a safely suspended installation solution.

Available materials — Product code example
EQZS — galvanized steel sheet
EQZS-K — 1.4301/304 stainless steel sheet

Product code example
Product code: **EQZS**

type

Installation method



Dimensions

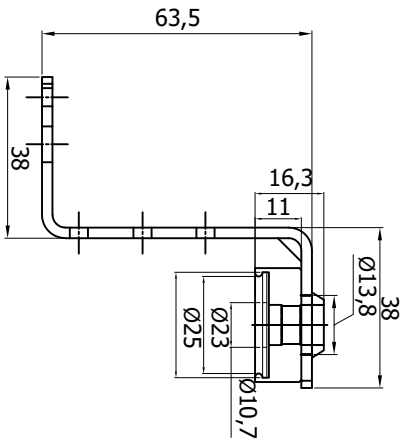

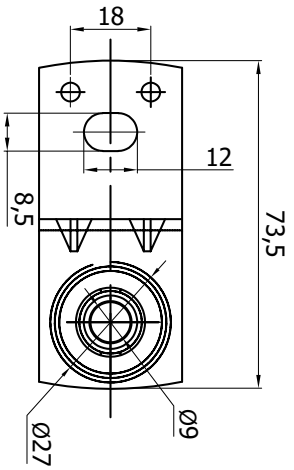

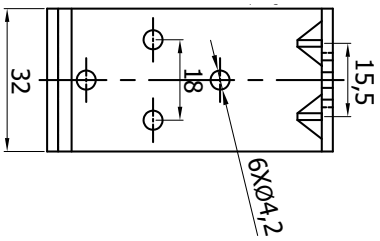

Type	*Specific load F_k (kN)*	*Recommended load F_z (kN)*
EQZS	1.2	0.6

ALNOR® ventilation systems
is a registered trademark protected by a technical patent. All modification rights reserved.

Rectangular duct suspension bracket

EQLS



Description

This type of duct suspension bracket is a quick-to-install fastener for square ventilation ducts, especially when the suspension system includes threaded rods and self-drilling screws.
The duct suspension bracket is fastened only to the top side of the duct to reduce the required number of threaded rods.

Available materials — Product code example
EQLS — galvanized steel sheet
EQLS-K — 1.4301/304 stainless steel sheet

Product code example
Product code: **EQLS**

type

Dimensions

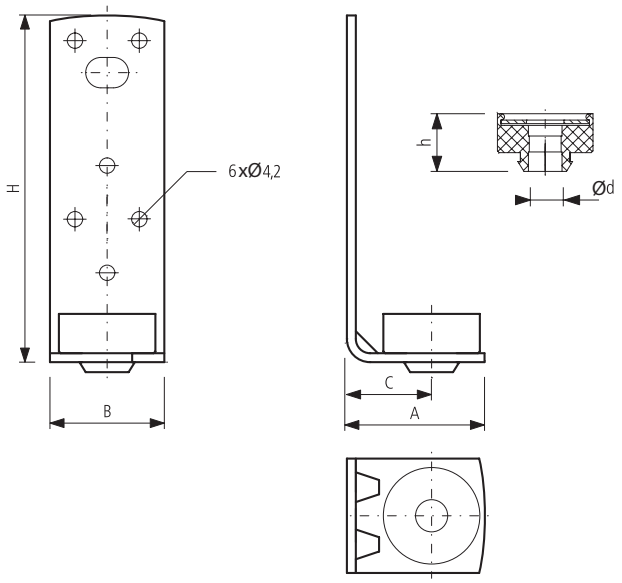

A (mm)	B (mm)	C (mm)	H (mm)	h (mm)	Ød (mm)
38	25	23	98	18.7	10

Type	Specific load F_k (kN)	Recommended load F_z (kN)
EQLS	1.2	0.6

Installation method



ALNOR® ventilation systems
is a registered trademark protected by a technical patent. All modification rights reserved.

Rectangular duct suspension brackets

EQVS-S

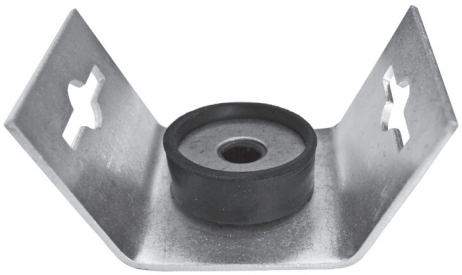

Description

A solution for a reliable and quick installation of all ventilation ductwork layouts.
V-type duct suspension brackets can hold various ductwork systems components attached with self-drilling screws under a roof structure made from box profile sheets.

Available materials — Product code example
EQVS-S — galvanized steel sheet
EQVS-S-K — 1.4301/304 stainless steel sheet

Product code example
Product code: **EQVS-S**

type

Dimensions

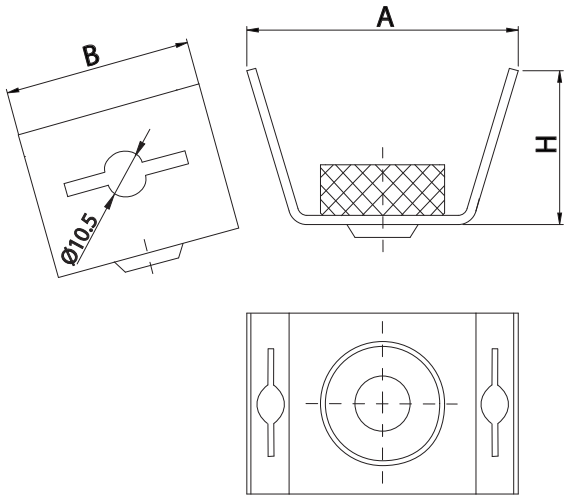

Type	*A (mm)*	*B (mm)*	*H (mm)*
EQVS-S	75	50	32

ALNOR® ventilation systems
is a registered trademark protected by a technical patent. All modification rights reserved.

Rectangular duct suspension brackets

EQZS-S



Description

Duct suspension brackets help with quick fastening of rectangular ducts on PG threaded rods which are passed through the shock-absorber sleeve. The upright component is bolted to the lateral part and the bottom of a square duct with WGO self-drilling screws. The duct suspension bracket is fastened only to the underside of the duct to improve the ductwork load capacity and provide a safely suspended installation solution.

Available materials — Product code example
EQZS-S — galvanized steel sheet
EQZS-S-K — 1.4301/304 stainless steel sheet

Product code example
Product code: **EQZS-S**

type

Dimensions

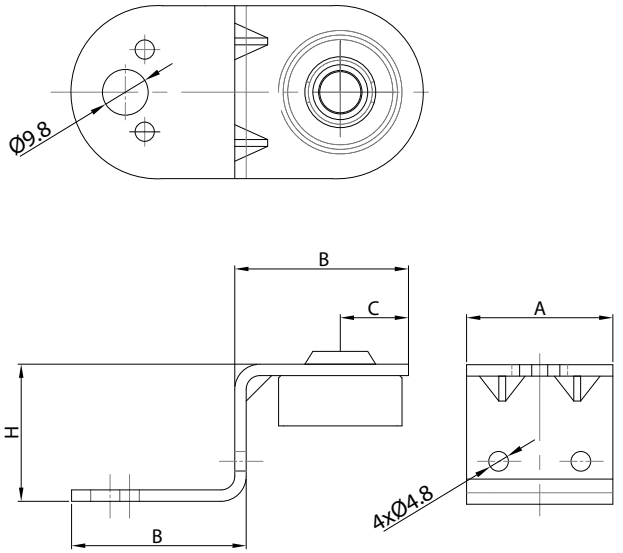

A (mm)	B (mm)	C (mm)	H (mm)
50	39	20	30

Installation method



ALNOR® ventilation systems
is a registered trademark protected by a technical patent. All modification rights reserved.

Rectangular duct suspension brackets

EQLS-S



Description

Duct suspension brackets help with quick fastening of rectangular ducts on PG threaded rods which are passed through the shock-absorber sleeve and tightened with NKS nuts. The upright component is bolted at the top of the square duct's side walls with WGO self-drilling screws.

Available materials — Product code example
EQLS-S — galvanized steel sheet
EQLS-S-K— 1.4301/304 stainless steel sheet

Product code example
Product code: **EQLS-S**

type

Dimensions

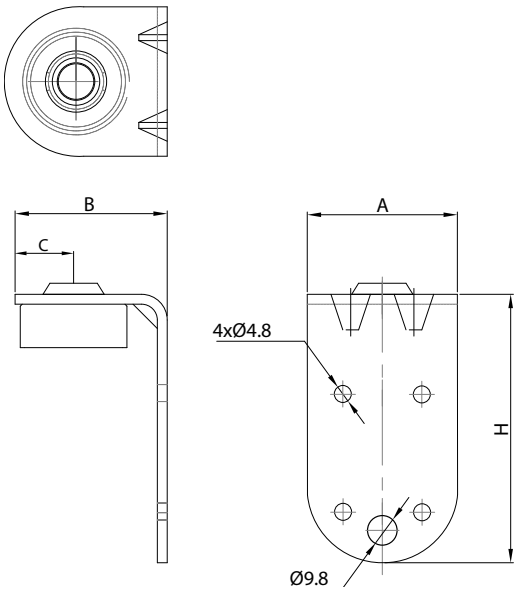

A (mm)	B (mm)	C (mm)	H (mm)
50	40	20	64

Installation method



ALNOR® ventilation systems
is a registered trademark protected by a technical patent. All modification rights reserved.

Shock-damper mount for ventilation ductwork suspension brackets

AMORT

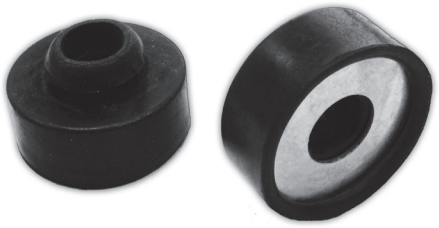

Dimensions

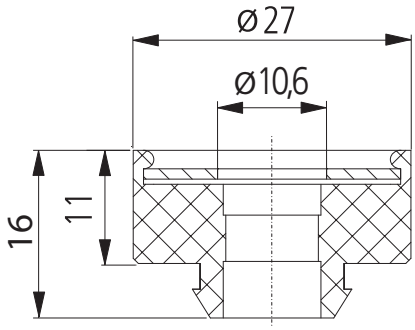

Description

The AMORT shock-damper mount is installed in ventilation duct suspension systems. The elastic block is made of EPDM and provided with a fixture made of galvanized steel sheet. The AMORT shock-absorber sleeve deadens vibration and noise.

Available materials — Product code example

AMORT-...	— galvanized steel sheet
AMORT-K-...	— 1.4301/304 stainless steel sheet
AMORT-K-...- 316L	— 1.4404/316L stainless steel sheet, molybdenum-enriched
AMORT-A-...	— AW-1050A H24 aluminium sheet
AMORT-CU-...	— M1E z4 copper sheet

Product code example

Product code: **AMORT**

type

ALNOR® ventilation systems
is a registered trademark protected by a technical patent. All modification rights reserved.

Fixing rail for building installations and ventilation systems

LDB

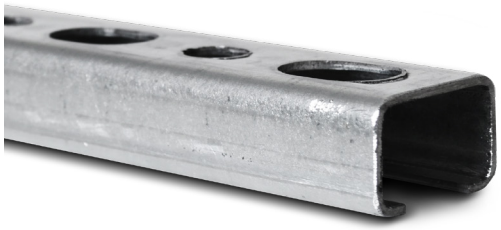

Description

LDB fixing rails are designed for suspending ventilation ducts, equipment and accessories. They are fastened using PG threaded rods. This solution can also be used to design and build various suspended installation types, fixtures, or structural parts of buildings.

Available materials - Product code example
LDB-...-...-...-... - galvanized steel sheet

Product code example
Product code: **LDB - 30 - 30 - 150 - 0250**

type
width
height
thickness
length

Dimensions

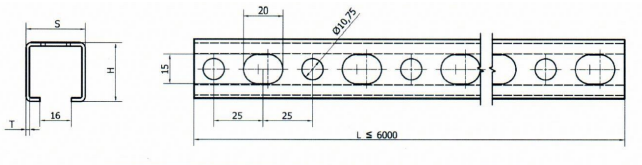

Type	S (mm)	H (mm)	T (mm)	L (m)
LDB-30-20-150-0250	30	20	1.50	2.50
LDB-30-20-150-0500	30	20	1.50	5.00
LDB-30-20-175-0250	30	20	1.75	2.50
LDB-30-20-175-0500	30	20	1.75	5.00
LDB-30-30-150-0250	30	30	1.50	2.50
LDB-30-30-150-0500	30	30	1.50	5.00
LDB-30-30-175-0250	30	30	1.75	2.50
LDB-30-30-175-0300	30	30	1.75	3.00
LDB-30-30-175-0500	30	30	1.75	5.00
LDB-30-45-150-0250	30	45	1.50	2.50
LDB-30-45-150-0500	30	45	1.50	5.00
LDB-30-45-175-0250	30	45	1.75	2.50
LDB-30-45-175-0500	30	45	1.75	5.00
LDB-41-21-200-0600	41	21	2.00	6.0
LDB-41-41-200-0600	41	41	2.00	6.0

Standard sections are 5 m long.

ALNOR® ventilation systems
is a registered trademark protected by a technical patent. All modification rights reserved.

Fixing rail for building installations and ventilation systems
LDB

Maximum acceptable load capacity of LDB fixing rail in various load cases

Support spacing L (mm)	*Maximum acceptable load F (N)*							
	LDB-30-20-150	*LDB-30-20-175*	*LDB-30-30-150*	*LDB-30-30-175*	*LDB-30-45-150*	*LDB-30-45-175*	*LDB-41-21-200*	*LDB-41-41-200*
250	1610	1827	3003	3406	5666	6502	3406	11858
300	1342	1522	2503	2838	4721	5418	2838	9881
350	1150	1305	2145	2433	4047	4644	2433	8470
400	1006	1142	1877	2129	3541	4064	2114	7411
450	843	1015	1668	1892	3148	3612	1669	6588
500	683	839	1502	1703	2833	3251	1352	5929
600	474	582	1251	1419	2361	2709	938	4714
700	348	428	1031	1180	2023	2322	690	3463
800	266	328	789	904	1771	2032	528	2652
900	211	259	623	714	1574	1806	417	2095
1000	170	209	505	579	1407	1497	338	1697
1200	118	146	350	402	977	1040	234	1178
1400	87	107	257	295	718	764	172	866
1600	67	82	197	226	549	584	132	663
1800	52	64	155	178	434	462	104	524
2000	43	52	126	144	352	374	84	424
2250		41	99	114	278	295	67	335
2500			81	92	225	239	54	274
2750			66	76	186	198	45	224
3000			56	64	156	166		188
3250				55	133	142		161
3500					114	122		138
3750					99	106		120
4000					88	93		106
4250					77	83		94
4500					69	74		84
4750					62	66		75
5000					56	59		68
5250						54		61
5500						49		56
5750								51
6000								47

Load diagram

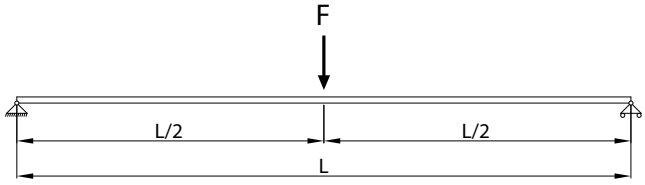

ALNOR® ventilation systems
is a registered trademark protected by a technical patent. All modification rights reserved.

Fixing rail for building installations and ventilation systems
LDB

Maximum acceptable load capacity of LDB fixing rail in various load cases

Support spacing L (mm)	*Maximum acceptable load F (N)*							
	LDB-30-20-150	*LDB-30-20-175*	*LDB-30-30-150*	*LDB-30-30-175*	*LDB-30-45-150*	*LDB-30-45-175*	*LDB-41-21-200*	*LDB-41-41-200*
250	1207	1370	2252	2554	4249	4876	2554	8893
300	1006	1142	1877	2129	3541	4064	2129	7411
350	824	979	1609	1824	3035	3483	1630	6352
400	631	775	1408	1596	2656	3048	1248	5558
450	498	612	1251	1419	2361	2709	986	4941
500	404	496	1126	1277	2125	2438	799	4011
600	280	344	829	950	1771	2032	555	2785
700	206	253	609	698	1518	1742	408	2046
800	158	194	466	534	1299	1383	312	1567
900	125	153	369	422	1027	1093	247	1238
1000	101	124	299	342	832	885	200	1003
1200	70	86	207	237	577	615	139	696
1400	52	63	152	175	424	452	102	512
1600		48	117	134	325	346	78	392
1800			92	106	257	273	62	309
2000			75	85	208	221	50	251
2250			59	68	164	175	39	198
2500			48	55	133	142		160
2750					110	117		133
3000					92	98		111
3250					79	84		95
3500					68	72		82
3750					58	62		70
4000					52	55		63
4250					46	49		56
4500						44		50
4750								44
5000								40

Load diagram

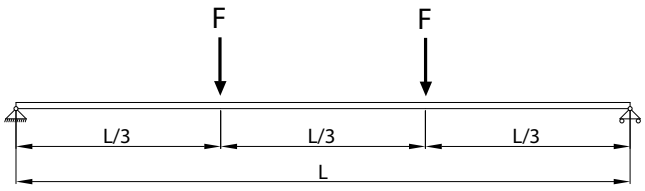

ALNOR® ventilation systems
is a registered trademark protected by a technical patent. All modification rights reserved.

Fixing rail for building installations and ventilation systems
LDB

Maximum acceptable load capacity of LDB fixing rail in various load cases

Support spacing L (mm)	*Maximum acceptable load F (N)*							
	LDB-30-20-150	*LDB-30-20-175*	*LDB-30-30-150*	*LDB-30-30-175*	*LDB-30-45-150*	*LDB-30-45-175*	*LDB-41-21-200*	*LDB-41-41-200*
250	805	913	1502	1703	2833	3251	1703	5929
300	671	761	1251	1419	2361	2709	1419	4941
350	526	652	1073	1216	2023	2322	1162	4235
400	402	552	938	1064	1771	2032	889	3706
450	318	436	834	946	1574	1806	703	3294
500	258	353	751	851	1416	1625	569	2858
600	179	245	591	677	1180	1355	395	1985
700	131	180	434	497	1012	1161	290	1458
800	101	138	332	381	885	985	222	1117
900	80	109	263	301	731	778	176	882
1000	64	88	213	244	592	631	142	715
1200	45	61	148	169	411	438	99	496
1400		45	109	124	302	322	73	365
1600			83	95	231	246	56	279
1800			66	75	183	195	44	221
2000			53	61	148	158		179
2250				48	117	125		141
2500					95	101		114
2750					78	83		94
3000					66	70		79
3250					56	60		68
3500					48	51		58
3750						45		51
4000								45
4250								40

Load diagram

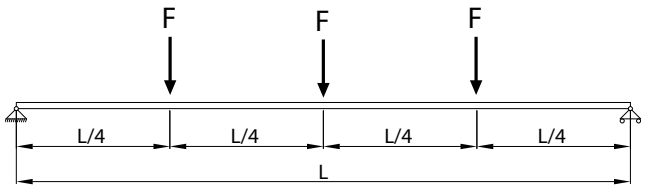

ALNOR® ventilation systems
is a registered trademark protected by a technical patent. All modification rights reserved.

Fixing rail for building installations and ventilation systems
LDB

Maximum acceptable load capacity of LDB fixing rail in various load cases

Support spacing L (mm)	*Maximum acceptable load F (N)*							
	LDB-30-20-150	*LDB-30-20-175*	*LDB-30-30-150*	*LDB-30-30-175*	*LDB-30-45-150*	*LDB-30-45-175*	*LDB-41-21-200*	*LDB-41-41-200*
250	3220	3653	6006	6811	11331	13003	6811	23715
300	2683	3044	5005	5676	9443	10836	5676	19763
350	2230	2609	4290	4865	8094	9288	4415	16940
400	1708	2097	3754	4257	7082	8127	3380	14822
450	1349	1657	3337	3784	6295	7224	2671	13175
500	1093	1342	3003	3406	5666	6502	2163	10861
600	759	932	2245	2572	4721	5418	1502	7543
700	558	685	1649	1889	4047	4644	1104	5541
800	427	524	1263	1446	3517	3743	845	4243
900	337	414	998	1143	2779	2958	668	3353
1000	273	336	808	926	2251	2396	541	2715
1200	190	233	561	643	1563	1664	376	1886
1400	139	171	412	472	1149	1222	276	1386
1600	107	131	316	362	879	936	211	1061
1800	84	104	249	286	695	739	167	838
2000	68	84	202	231	563	599	135	679
2250	54	66	160	183	445	473	107	536
2500		54	129	148	360	383	87	434
2750			107	122	298	317	72	359
3000			90	103	250	266	60	302
3250			77	88	213	227	51	257
3500			66	76	184	196	44	222
3750			57	66	160	170		193
4000			51	58	141	150		170
4250					125	133		150
4500					111	118		134
4750					100	106		120
5000					90	96		109
5250					82	87		99
5500					74	79		90
5750					68	72		82
6000					63	67		75

Load diagram

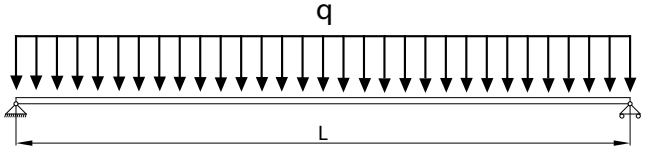

ALNOR® ventilation systems
is a registered trademark protected by a technical patent. All modification rights reserved.

STRUT channel for building installations and ventilation systems

LDBST



Description

LDBST strut channel are available in 2 to 6 m long and 1.6, 1.9, 2.0, and 2.5 mm thick sections. The STRUT channels are the main components of HVAC and cooling installation systems and can come very handy in fastening of any suspended installations. The serrated inturned edges interlock with SNP, SNL and SNKL unistrut channel nut washers to hold the channel and its fastening bolts in place, as installed. The Strut channels are compatible with the ST-ROF system for building roof supports and cantilever support arms.

Note:
Outdoor roof structures require LDBSO strut channel with a full hot-dip galvanic coating which provides long-terms resistance to outdoor weathering.

Available materials - Product code example
LDBST-...-...-...-... - galvanized steel sheet

Product code example
Product code: **LDBST - 41 - 41 - 200 - 0300**

type
width
height
thickness
length

Dimensions

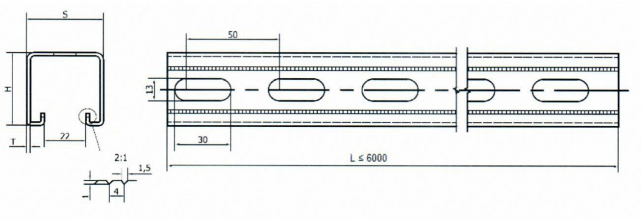

Type	S (mm)	H (mm)	T (mm)	L (m)
LDBST-41-21-200-0300	41	21	2.00	3.00
LDBST-41-21-200-0400	41	21	2.00	4.00
LDBST-41-21-200-0600	41	21	2.00	6.00
LDBST-41-21-250-0300	41	21	2.50	3.00
LDBST-41-21-250-0400	41	21	2.50	4.00
LDBST-41-21-250-0600	41	21	2.50	6.00
LDBST-41-41-200-0300	41	41	2.00	3.00
LDBST-41-41-200-0400	41	41	2.00	4.00
LDBST-41-41-200-0600	41	41	2.00	6.00
LDBST-41-41-250-0300	41	41	2.50	3.00
LDBST-41-41-250-0400	41	41	2.50	4.00
LDBST-41-41-250-0600	41	41	2.50	6.00

Standard sections are 6 m long.

ALNOR® ventilation systems
is a registered trademark protected by a technical patent. All modification rights reserved.

STRUT channel for building installations and ventilation systems
LDBST

Maximum acceptable load capacity of LDBST channels in various load cases

Support spacing L (mm)	*Maximum acceptable load F (N)*				
	LDBST-41-21-160	*LDBST-41-21-200*	*LDBST-41-21-250*	*LDBST-41-41-200*	*LDBST-41-41-205*
250	2050	3251	3746	12167	14613
300		2709	3122	10139	12178
350		2322	2676	8691	10438
400		2032	2341	7605	9133
450		1714	2081	6760	8118
500	840	1388	1858	6084	7307
600		964	1290	5070	6050
700		708	948	3749	4445
800		542	726	2870	3403
900		428	573	2268	2689
1000	160	347	464	1837	2178
1200		241	322	1276	1513
1400		177	237	937	1111
1600	68	136	181	718	847
1800		107	143	567	672
2000		86	116	459	544
2250		68	92	362	430
2500		55	74	293	348
2750		46	61	242	288
3000				204	242
3250				173	206
3500				149	178
3750				130	155
4000				115	136
4250				101	121
4500				91	107
4750				81	96
5000				73	87
5250				67	79
5500				61	72
5750				55	65
6000				51	60

Load diagram

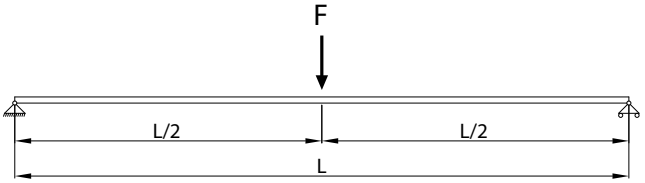

ALNOR® ventilation systems
is a registered trademark protected by a technical patent. All modification rights reserved.

STRUT channel for building installations and ventilation systems

LDBST

Maximum acceptable load capacity of LDBST channels in various load cases

Support spacing L (mm)	*Maximum acceptable load F (N)*			
	LDBST-41-21-200	*LDBST-41-21-250*	*LDBST-41-41-200*	*LDBST-41-41-250*
250	2438	2810	9125	10960
300	2032	2341	7605	9133
350	1675	2007	6518	7828
400	1282	1716	5703	6850
450	1013	1356	5070	6089
500	821	1098	4342	5148
600	570	763	3016	3575
700	419	560	2216	2627
800	321	429	1696	2011
900	253	339	1341	1589
1000	205	275	1086	1288
1200	143	191	754	894
1400	105	140	554	657
1600	80	107	424	503
1800	63	85	335	397
2000	51	69	271	322
2250		54	214	254
2500			174	206
2750			144	170
3000			121	143
3250			103	122
3500			89	105
3750			76	90
4000			68	80
4250			60	71
4500			54	64
4750			48	57
5000			43	51

Load diagram

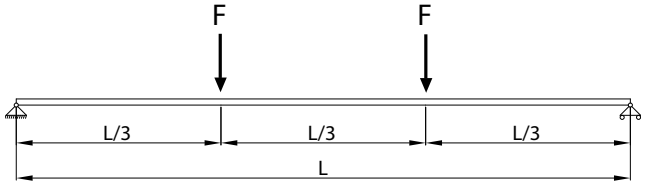

ALNOR® ventilation systems
is a registered trademark protected by a technical patent. All modification rights reserved.

STRUT channel for building installations and ventilation systems

LDBST

Maximum acceptable load capacity of LDBST channels in various load cases

Support spacing L (mm)	*Maximum acceptable load F (N)*			
	LDBST-41-21-200	*LDBST-41-21-250*	*LDBST-41-41-200*	*LDBST-41-41-250*
250	1625	1873	6084	7307
300	1355	1561	5070	6089
350	1161	1338	4345	5219
400	914	1171	3802	4567
450	722	966	3380	4059
500	585	782	3042	3653
600	406	543	2149	2548
700	298	399	1579	1872
800	228	306	1209	1433
900	181	242	955	1132
1000	146	196	774	917
1200	102	136	537	637
1400	75	100	395	468
1600	57	76	302	358
1800	45	60	239	283
2000		49	193	229
2250			153	181
2500			124	147
2750			102	121
3000			86	102
3250			73	87
3500			63	75
3750			55	65
4000			48	57
4250			43	51
4500				45

Load diagram

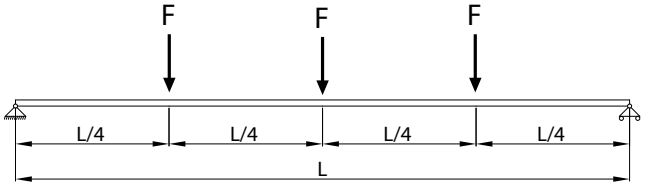

ALNOR® ventilation systems
is a registered trademark protected by a technical patent. All modification rights reserved.

STRUT channel for building installations and ventilation systems

LDBST

Maximum acceptable load capacity of LDBST channels in various load cases

Support spacing L (mm)	*Maximum acceptable load F (N)*			
	LDBST-41-21-200	*LDBST-41-21-250*	*LDBST-41-41-200*	*LDBST-41-41-250*
250	6502	7492	24335	29226
300	5418	6244	20279	24355
350	4534	5352	17382	20876
400	3472	4646	15209	18266
450	2743	3671	13519	16237
500	2222	2973	11758	13941
600	1543	2065	8166	9682
700	1134	1517	5999	7113
800	868	1161	4593	5446
900	686	918	3629	4303
1000	555	743	2940	3486
1200	386	516	2041	2421
1400	283	379	1500	1778
1600	217	290	1148	1361
1800	171	229	907	1076
2000	139	186	735	871
2250	110	147	581	688
2500	89	119	470	558
2750	73	98	389	461
3000	62	83	327	387
3250	53	70	278	330
3500	45	61	240	285
3750			209	248
4000			184	218
4250			163	193
4500			145	172
4750			130	154
5000			118	139
5250			107	126
5500			97	115
5750			89	105
6000			82	97

Load diagram

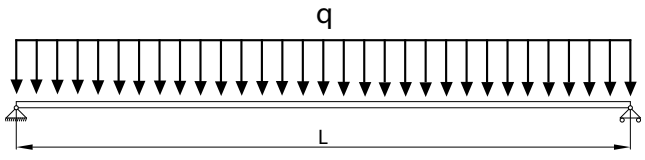

ALNOR® ventilation systems
is a registered trademark protected by a technical patent. All modification rights reserved.

Double STRUT channel for ventilation systems

LDBDT



Description

LDBDT double Strut channels are available in 2 / 3 / 4 to 6 m long and 2.0, and 2.5 mm thick sections.
All LDB double Strut channels are made of two spot-welded LDBST Strut channels. They can carry much higher loads compared to single Strut channels.

Note:
Outdoor roof structures require LDBDO double Strut channels with a full hot-dip galvanic coating which provides long-terms resistance to outdoor weathering.

Available materials - Product code example
LDBDT-... - galvanized steel sheet
LDBDO-... - hot-dip galvanized steel sheet

Product code example
Product code: **LDBDT - 41 - 41 - 41 - 200 - 0300**

type
width
height 1
height 2
thickness
length

Dimensions

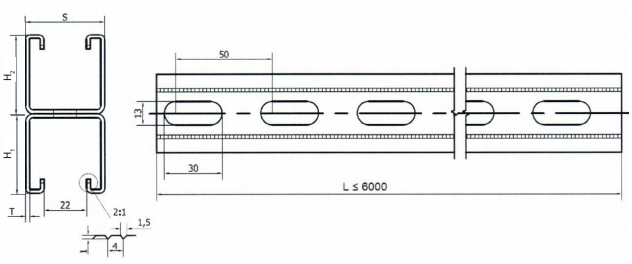

Product code	S (mm)	H_1 (mm)	H_2 (mm)	T (mm)	L (m)
LDBDT-41-21-21-200-0200	41	21	21	2,00	2,00
LDBDT-41-21-21-200-0300	41	21	21	2,00	3,00
LDBDT-41-21-21-200-0400	41	21	21	2,00	4,00
LDBDT-41-21-21-200-0600	41	21	21	2,00	6,00
LDBDT-41-41-41-200-0200	41	41	41	2,00	2,00
LDBDT-41-41-41-200-0300	41	41	41	2,00	3,00
LDBDT-41-41-41-200-0400	41	41	41	2,00	4,00
LDBDT-41-41-41-200-0600	41	41	41	2,00	6,00
LDBDT-41-21-21-250-0200	41	21	21	2,50	2,00
LDBDT-41-21-21-250-0300	41	21	21	2,50	3,00
LDBDT-41-21-21-250-0400	41	21	21	2,50	4,00
LDBDT-41-21-21-250-0600	41	21	21	2,50	6,00
LDBDT-41-41-41-250-0200	41	41	41	2,50	2,00
LDBDT-41-41-41-250-0300	41	41	41	2,50	3,00
LDBDT-41-41-41-250-0400	41	41	41	2,50	4,00
LDBDT-41-41-41-250-0600	41	41	41	2,50	6,00

Standard sections are 6 m long.

ALNOR® ventilation systems
is a registered trademark protected by a technical patent. All modification rights reserved.

Double channel strut for ventilation systems
LDBDT

Maximum acceptable load capacity of LDBDT channels

Support spacing L (mm)	*Maximum load F (N)*	
	LDBDT-41-41-41-200	*LDBDT-41-41-41-250*
250	10860	14070
500	8800	11250
1000	4100	5725
1600	1050	1490

Load diagram

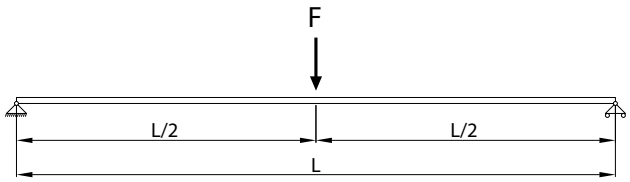

ALNOR® ventilation systems
is a registered trademark protected by a technical patent. All modification rights reserved.

Wall-mounted cantilever support arms

W-LDB

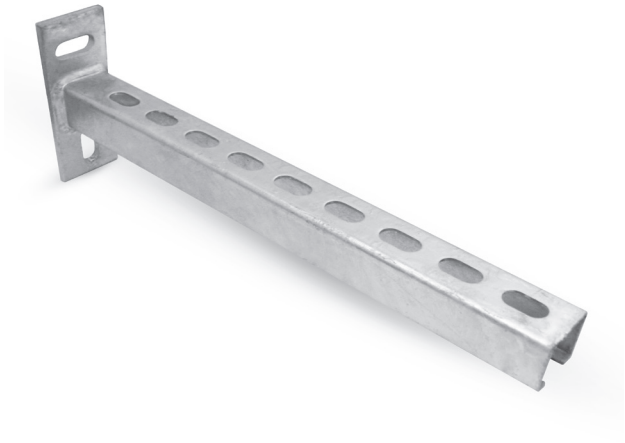

Description

W-LDB cantilever support arms are designed for installing rectangular ventilation ducts directly along walls and for supporting heavy HVAC components, including A/C split indoor and outdoor units and AHUs.

Available materials - Product code example
W-LDB-...-...-... - galvanized steel sheet

Product code example
Product code: **W-LDB - 30 - 30 - 250**

type
width
height
length

Dimensions

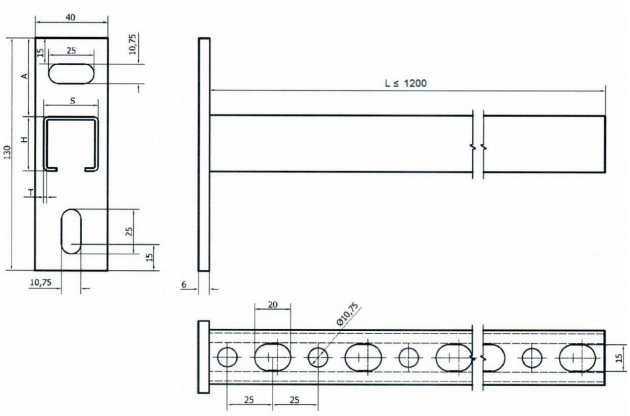

Product code	S [mm]	H [mm]	A [mm]	T [mm]	L [mm]
W-LDB-30-20-150	30	20	55	≥1.5	150
W-LDB-30-20-200	30	20	55	≥1.5	200
W-LDB-30-20-250	30	20	55	≥1.5	250
W-LDB-30-20-300	30	20	55	≥1.5	300
W-LDB-30-20-350	30	20	55	≥1.5	350
W-LDB-30-20-400	30	20	55	≥1.5	400
W-LDB-30-20-450	30	20	55	≥1.5	450
W-LDB-30-20-500	30	20	55	≥15	500
W-LDB-30-20-550	30	20	55	≥1.5	550
W-LDB-30-20-600	30	20	55	≥1.5	600
W-LDB-30-20-650	30	20	55	≥1.5	650
W-LDB-30-20-700	30	20	55	≥1.5	700
W-LDB-30-20-750	30	20	55	≥1.5	750
W-LDB-30-30-150	30	30	50	≥2.0	150
W-LDB-30-30-200	30	30	50	≥2.0	200
W-LDB-30-30-250	30	30	50	≥2.0	250
W-LDB-30-30-300	30	30	50	≥2.0	300
W-LDB-30-30-350	30	30	50	≥2.0	350
W-LDB-30-30-400	30	30	50	≥2.0	400
W-LDB-30-30-450	30	30	50	≥2.0	450
W-LDB-30-30-500	30	30	50	≥2.0	500
W-LDB-30-30-550	30	30	50	≥2.0	550
W-LDB-30-30-600	30	30	50	≥2.0	600
W-LDB-30-30-650	30	30	50	≥2.0	650
W-LDB-30-30-700	30	30	50	≥2.0	700
W-LDB-30-30-750	30	30	50	≥2.0	750

ALNOR® ventilation systems
is a registered trademark protected by a technical patent. All modification rights reserved.

Wall-mounted cantilever support arms

W-LDB

Dimensions

Product code	S [mm]	H [mm]	A [mm]	T [mm]	L [mm]
W-LDB-41-21-150	41	21	54	≥2.0	150
W-LDB-41-21-200	41	21	54	≥2.0	200
W-LDB-41-21-250	41	21	54	≥2.0	250
W-LDB-41-21-300	41	21	54	≥2.0	300
W-LDB-41-21-350	41	21	54	≥2.0	350
W-LDB-41-21-400	41	21	54	≥2.0	400
W-LDB-41-21-450	41	21	54	≥2.0	450
W-LDB-41-21-500	41	21	54	≥2.0	500
W-LDB-41-21-550	41	21	54	≥2.0	550
W-LDB-41-21-600	41	21	54	≥2.0	600
W-LDB-41-21-650	41	21	54	≥2.0	650
W-LDB-41-21-700	41	21	54	≥2.0	700
W-LDB-41-21-750	41	21	54	≥2.0	750
W-LDB-41-21-1000	41	21	54	≥2.0	1000

Product code	S [mm]	H [mm]	A [mm]	T [mm]	L [mm]
W-LDB-41-41-150	41	41	43	≥2.0	150
W-LDB-41-41-200	41	41	43	≥2.0	200
W-LDB-41-41-250	41	41	43	≥2.0	250
W-LDB-41-41-300	41	41	43	≥2.0	300
W-LDB-41-41-350	41	41	43	≥2.0	350
W-LDB-41-41-400	41	41	43	≥2.0	400
W-LDB-41-41-450	41	41	43	≥2.0	450
W-LDB-41-41-500	41	41	43	≥2.0	500
W-LDB-41-41-550	41	41	43	≥2.0	550
W-LDB-41-41-600	41	41	43	≥2.0	600
W-LDB-41-41-650	41	41	43	≥2.0	650
W-LDB-41-41-700	41	41	43	≥2.0	700
W-LDB-41-41-750	41	41	43	≥2.0	750
W-LDB-41-41-1000	41	41	43	≥2.0	1000

Technical data

Maximum acceptable load capacity of W-LDB cantilever support arm channels under point load

Support spacing L (mm)	Maximum load F (N)		
	W-LDB-30-20	W-LDB-30-30	W-LDB-41-41
150		353	
200		264	
250		212	
300		176	
350		151	
400		132	
450	70	118	320
500		100	
550		83	
600		69	
650		59	
700		51	
750		44	
1200	15	30	80

Maximum acceptable load capacity of W-LDB cantilever support arm channels under continuous linear load

Support spacing L (mm)	Maximum load F (N)
	W-LDB-30-30
150	705
200	529
250	423
300	353
350	302
400	264
450	235
500	212
550	192
600	176
650	158
700	136
750	119

Load diagram

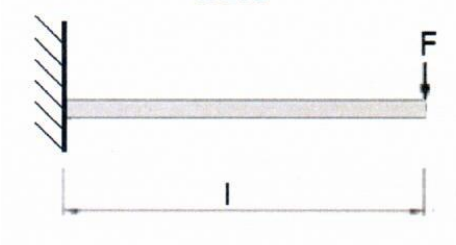

Load diagram

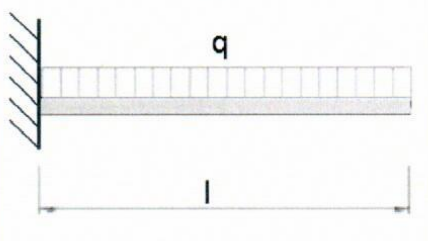

ALNOR® ventilation systems
is a registered trademark protected by a technical patent. All modification rights reserved.

Wall-mounted cantilever support arms

WK-LDB

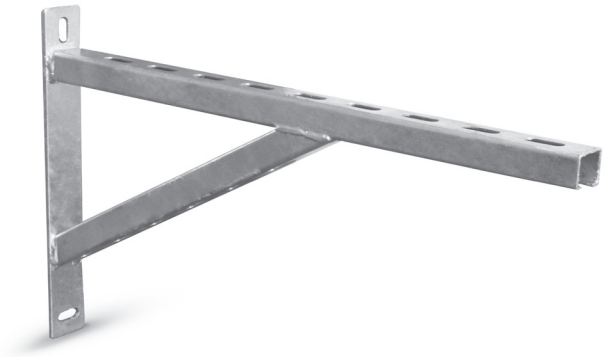

Description

WK-LDB cantilever support arms are designed for installing rectangular ventilation ducts directly along walls and for supporting heavy HVAC components, including A/C split indoor and outdoor units and AHUs. The additional bracing enhances the load capacity, permitting a wider clearance between the suspended installation parts and the walls.

Available materials - Product code example
WK-LDB-...-...-... - galvanized steel sheet

Product code example
Product code: **WK-LDB - 30 - 30 - 400**

type
width
height
length

Dimensions

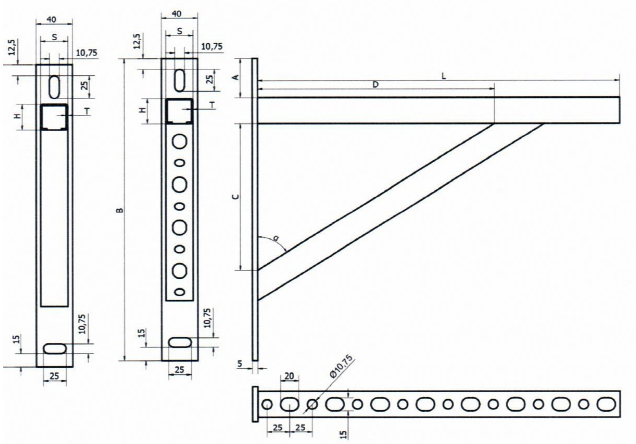

Product code	S [mm]	H [mm]	A [mm]	B [mm]	C [mm]	D [mm]	L [mm]
WK-LDB-30-30-400	30	30	42	350	160	245	400
WK-LDB-30-30-500	30	30	42	350	160	245	500
WK-LDB-30-30-600	30	30	42	350	195	320	600
WK-LDB-30-30-700	30	30	42	350	195	345	700
WK-LDB-30-30-800	30	30	42	500	265	425	800
WK-LDB-30-30-900	30	30	42	500	265	450	900
WK-LDB-30-30-1000	30	30	42	500	265	525	1000
WK-LDB-30-30-1200	30	30	42	500	350	600	1200
WK-LDB-41-21-400	41	21	42	330	160	245	400
WK-LDB-41-21-500	41	21	42	330	160	245	500
WK-LDB-41-21-600	41	21	42	330	195	325	600
WK-LDB-41-21-700	41	21	42	330	195	340	700
WK-LDB-41-41-400	41	41	42	370	160	245	400
WK-LDB-41-41-500	41	41	42	370	160	245	500
WK-LDB-41-41-600	41	41	42	370	195	325	600
WK-LDB-41-41-700	41	41	42	370	195	340	700
WK-LDB-41-41-800	41	41	42	500	265	425	800
WK-LDB-41-41-900	41	41	42	500	265	450	900
WK-LDB-41-41-1000	41	41	42	500	295	525	1000
WK-LDB-41-41-1200	41	41	42	500	350	600	1200
WK-LDB-41-41-1500	41	41	42	750	475	825	1500

ALNOR® ventilation systems
is a registered trademark protected by a technical patent. All modification rights reserved.

Wall-mounted cantilever support arms

WK-LDB

Technical data

Maximum acceptable load capacity of WK-LDB cantilever support arm channels under point load

Support spacing L (mm)	*Maximum load F (N)*	
	WK-LDB-30-30	*WK-LDB-41-41*
400	1748	
500	971	
600	950	1130
700	594	
1200	220	
1500		420

Load diagram

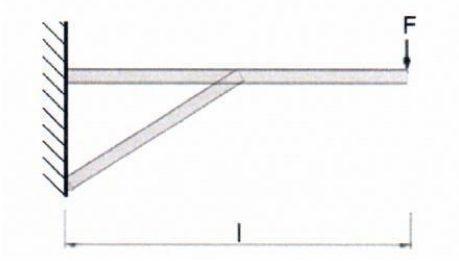

Maximum acceptable load capacity of WK-LDB cantilever support arm channels under continuous linear load

Support spacing L (mm)	*Maximum load F (N)*
	WK-LDB-30-30
400	3495
500	1942
600	1899
700	1324

Load diagram

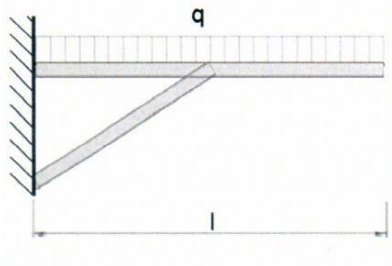

ALNOR® ventilation systems
is a registered trademark protected by a technical patent. All modification rights reserved.

Channel & strut base fitting

ST-P

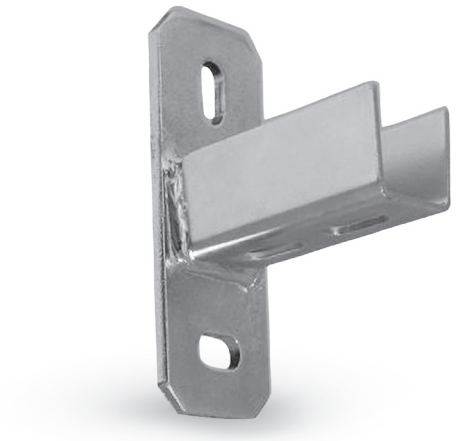

Description

ST-P base fittings are fixtures for LDB and LDBST channels. There are two baseplate slots for fastening the base fitting with anchors and bolts and two slots on the stub arm for fastening an LDBST channel strut. The bean-shaped slots enable precise and smooth adjustment of the jointed parts. The base fitting has various uses in construction and installation projects. This product can be used outdoors with a hot-dip galvanized finish.

Available materials — Product code example
ST-P-... — galvanized steel sheet
ST-P-K-... — 1.4301/304 stainless steel sheet
STO-P-... — hot-dip galvanized steel sheet

Product code example
Product code: **ST-P - 30**

type
width

Dimensions

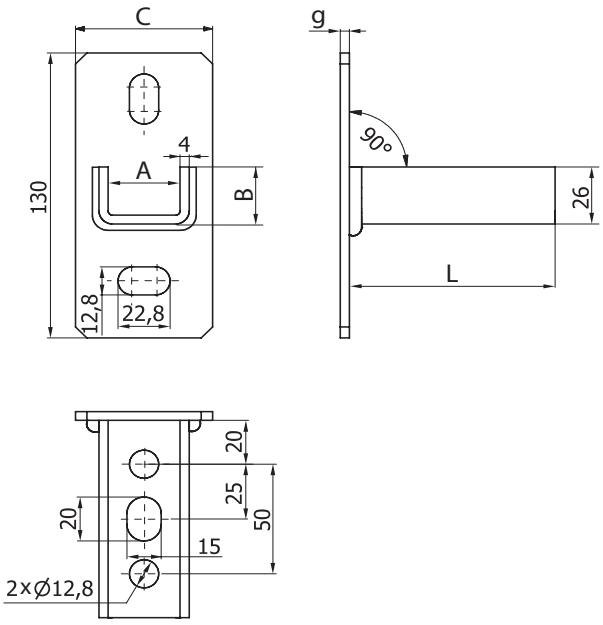

Product code	A (mm)	B (mm)	C (mm)	L (mm)	g (mm)
ST-P-30	31	26	60	90	4
ST-P-40	42	26	70	90	4

Installation method



ALNOR® ventilation systems
is a registered trademark protected by a technical patent. All modification rights reserved.

Channel angle bracket

LDB-BE



Description

L-type angle brackets are available in two versions which vary in the layout of openings. Type LDB-BE-30-1-2 is used for joining one strut to another at the side with the holes in a T-shaped arrangement. Type LDB-BE-30-2-1 is used for joining a vertical channel strut with two more struts to form a T-shaped arrangement.
This product can be used outdoors with a hot-dip galvanized finish.

Available materials — Product code example

LDB-BE-30-1-2 — galvanized steel sheet
LDB-BE-K-30-1-2-K — 1.4301/304 stainless steel sheet
LDB-BE-K-30-1-2-K-316L — 1.4404/316L stainless steel sheet,molybdenum-enriched
LDB-BE-K-30-1-2-A — AW-1050A H24 aluminium sheet
LDO-BE-30-1-2 — hot-dip galvanized steel sheet

Product code example

Product code: **LDB-BE-30-1-2**

type

Dimensions

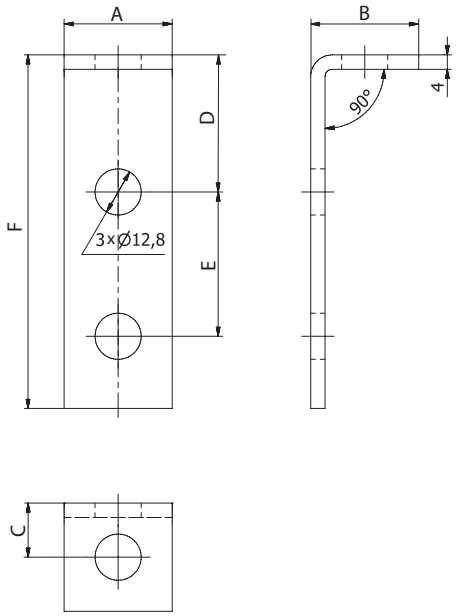

Product code	A (mm)	B (mm)	C (mm)	D (mm)	E (mm)	F (mm)
LDB-BE-30-1-2	30	30	15	38	40	98
LDB-BE-30-2-1	30	50	30	15	40	75

Installation method

Installation method A



Installation method B



ALNOR® ventilation systems
is a registered trademark protected by a technical patent. All modification rights reserved.

Channel angle bracket

LDB-BE

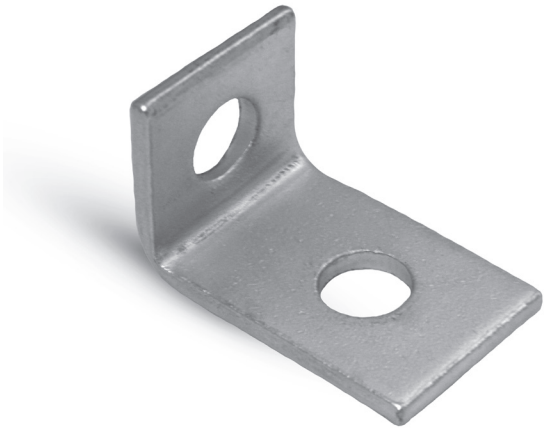

Description

Type L 1-1 angle bracket features one hole on each of the two legs. It can be used for low-load joints of two struts at 90 degree in a T-shaped arrangement. The piece can be useful for building ventilation duct fixtures and other building installation mounts.
This product can be used outdoors with a hot-dip galvanized finish.

Available materials — Product code example

LDB-BE-30-1-1-R — galvanized steel sheet
LDB-BE-30-1-1-R-K — 1.4301/304 stainless steel sheet
LDB-BE-30-1-1-R-K-...-316L — 1.4404/316L stainless steel sheet, molybdenum-enriched
LDB-BE-30-1-1-R-A — AW-1050A H24 aluminium sheet
LDO-BE-30-1-1-R — hot-dip galvanized steel sheet

Product code example

Product code: **LDB-BE-30-1-1-R**

type

Dimensions

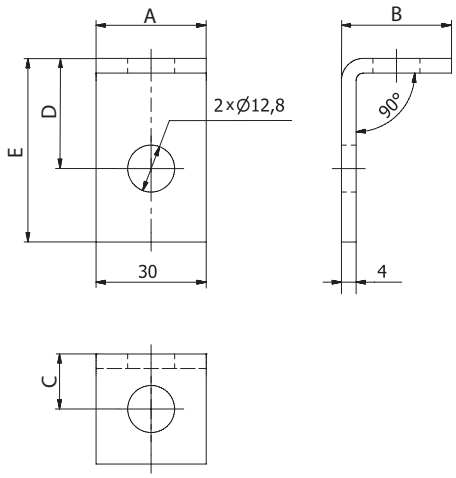

Product code	A (mm)	B (mm)	C (mm)	D (mm)	E (mm)
LDB-BE-30-1-1-R	30	30	15	30	50

Installation method



ALNOR® ventilation systems
is a registered trademark protected by a technical patent. All modification rights reserved.

Angle bracket for LDB fixing rail

LDB-BTRA



Description

The LDB-BTRA angle bracket is used for one-point fastening of cross-oriented fixing rails. The two holes on the horizontal leg help fastening without the need for an additional strut. The piece helps installing HVAC components and other objects having relatively low weight.
This product can be used outdoors with a hot-dip galvanized finish.

Available materials — Product code example

LDB-BTRA-30-3 — galvanized steel sheet
LDB-BTRA-30-3-K — 1.4301/304 stainless steel sheet
LDB-BTRA-30-3-K-...-316L — 1.4404/316L stainless steel sheet, molybdenum-enriched
LDB-BTRA-30-3-A — AW-1050A H24 aluminium sheet
LDO-BTRA-30-3 — hot-dip galvanized steel sheet

Product code example

Product code: **LDB-BTRA-30-3**

type

Dimensions

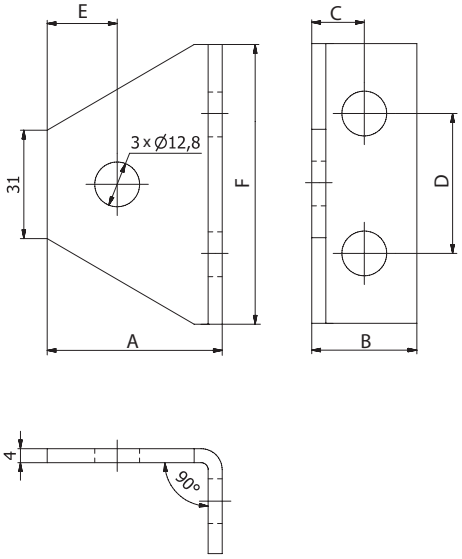

Product code	A (mm)	B (mm)	C (mm)	D (mm)	E (mm)	F (mm)
LDB-BTRA-30-3	50	30	15	40	20	80

Installation method



ALNOR® ventilation systems
is a registered trademark protected by a technical patent. All modification rights reserved.

Angle bracket for LDB fixing rails

LDB-BAN



Description

LDB-BAN angle brackets have a width compatible for building sharp angle joints of two LDB 30 fixing rails. Depending on the leg-to-leg angle, it can form a joint at 30 , 45 , 60 , 120 , 135 and 150 degrees between two channels. This piece provides superior flexibility in building supports and suspension systems for HVAC installations and other structural applications. Angle bracket are often used for fabrication of heavy-duty consoles / cantilevers with a support arm length exceeding 1000 mm. This product can be used outdoors with a hot-dip galvanized finish.

Available materials — Product code example

LDB-BAN-30-30-2 — galvanized steel sheet
LDB-BAN-30-30-2-K — 1.4301/304 stainless steel sheet
LDB-BAN-30-30-2-K-316L — 1.4404/316L stainless steel sheet, molybdenum-enriched
LDB-BAN-30-30-2-A — AW-1050A H24 aluminium sheet
LDO-BAN-30-30-2 — hot-dip galvanized steel sheet

Product code example

Product code: **LDB-BAN-30-30-2**

type

Dimensions

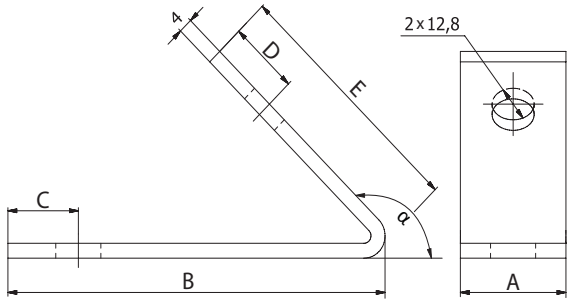

Product code	A (mm)	B (mm)	C (mm)	D (mm)	E (mm)	α [°]
LDB-BAN-30-30-2	30	47	20	20	84	30
LDB-BAN-30-45-2	30	47	20	20	84	45
LDB-BAN-30-60-2	30	47	20	20	84	60
LDB-BAN-30-120-2	30	107	20	20	70	120
LDB-BAN-30-135-2	30	107	20	20	70	135
LDB-BAN-30-150-2	30	107	20	20	70	150

Installation method

Installation method A



Installation method B



ALNOR® ventilation systems
is a registered trademark protected by a technical patent. All modification rights reserved.

Flat square fitting for LDBST channel

LDB-P-41-1

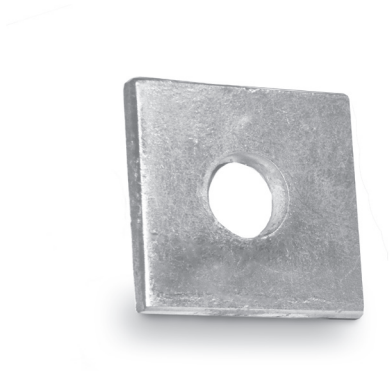

Description

This flat fitting is intended for building and reinforcing joints made of Strut channels. The usual fastener is a PG threaded rod with NKS nuts, as used in drop-down suspension systems. The fitting can be used for suspending ventilation systems or in other construction projects.
This product can be used outdoors with a hot-dip galvanized finish.

Available materials — Product code example

LDB-P-41-1	— galvanized steel sheet
LDB-P-41-1-K	— 1.4301/304 stainless steel sheet
LDB-P-41-1-K-316L	— 1.4404/316L stainless steel sheet, molybdenum-enriched
LDB-P-41-1-A	— AW-1050A H24 aluminium sheet
LDO-P-41-1	— hot-dip galvanized steel sheet

Product code example

Product code: **LDB-P-41-1**

type

Dimensions

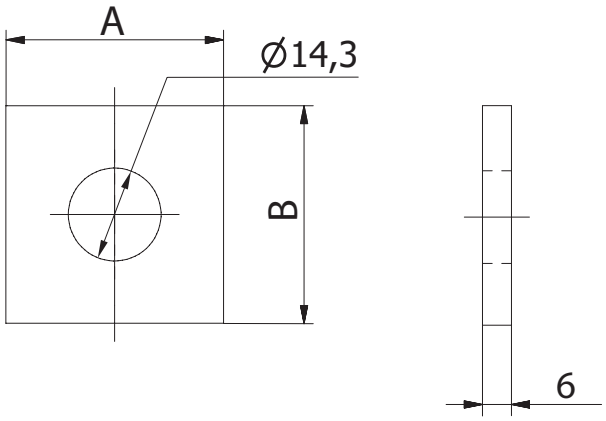

Product code	A (mm)	B (mm)
LDB-P-41-1	40	40

Installation method

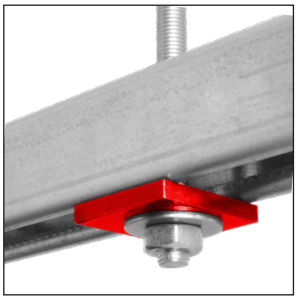

ALNOR® ventilation systems
is a registered trademark protected by a technical patent. All modification rights reserved.

Flat plate bracket for LDBST channel

LDB-P-41-2



Description

Flat plate brackets are designed for building and reinforcing joints of Strut channels. They are mostly used for joining two aligned sections of 41x21 or 41x41 Strut channels. Depending on your needs, you can use strut strap types from LDB-P-41-2 to LDB-P-41-4, which vary in length and the number of holes. The higher the load and the overall length of joined strut channels, the longer strut strap should be used. Flat brackets can also be used for side-by-side joining of 2 to 5 strut channels.
This product can be used outdoors with a hot-dip galvanized finish.

Available materials - Product code example

LDB-P-41-2 - galvanized steel sheet
LDB-P-41-2-K - 1.4301/304 stainless steel sheet
LDB-P-41-2-K-316L - 1.4404/316L stainless steel sheet, molybdenum-enriched
LDB-P-41-2-A - AW-1050A H24 aluminium sheet
LDO-P-41-2 - hot-dip galvanized steel sheet

Product code example

Product code: **LDB-P-41-2**

type

Dimensions

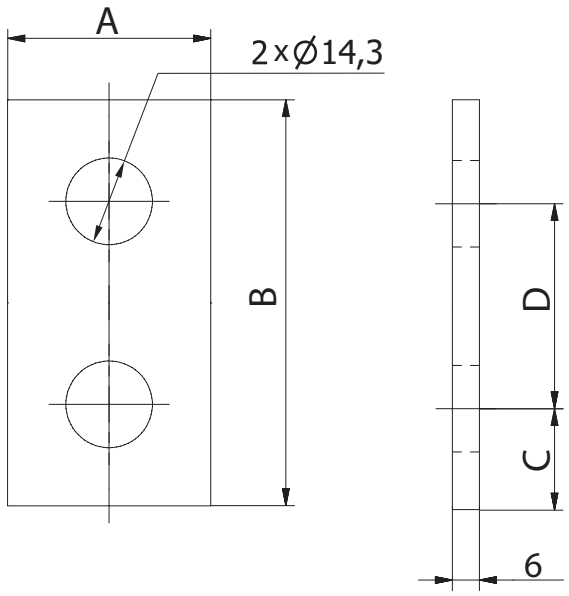

Product code	A (mm)	B (mm)	C (mm)	D (mm)	Number of holes
LDB-P-41-2	40	88	20	48	2
LDB-P-41-3	40	136	20	48	3
LDB-P-41-4	40	184	20	48	4
LDB-P-41-5	40	232	20	48	5

Installation method

LDB-P-41-2



LDB-P-41-3

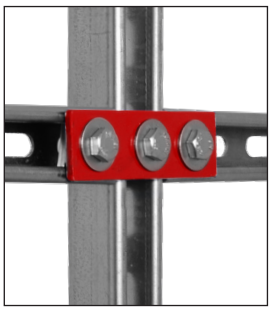

LDB-P-41-4

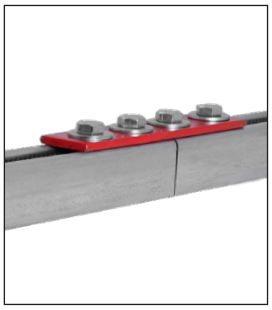

LDB-P-41-5

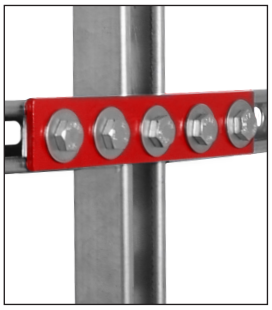

ALNOR® ventilation systems
is a registered trademark protected by a technical patent. All modification rights reserved.

Angle flat plate bracket for LDBST channel

LDB-PC-41-3



Dimensions

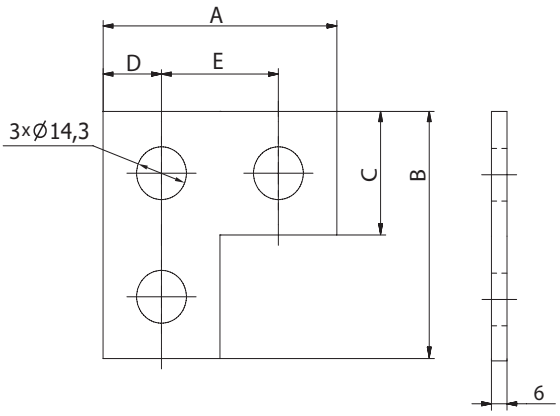

Product code	A (mm)	B (mm)	C (mm)	D (mm)	E (mm)
LDB-PC-41-3	89	89	41	21	47

Description

LDB-PC-41-3 fittings are angle flat plate brackets with 3 holes. This is often used for fabrication of support frames with LDBST channel openings aligned vertically and flat square support frames. Angle flat plate brackets are easier to use with SNP and SNL unistrut channel washers and SRS screws.
This product can be used outdoors with a hot-dip galvanized finish.

Available materials — Product code example

LDB-PC-41-3 — galvanized steel sheet
LDB-PC-41-3-K — 1.4301/304 stainless steel sheet
LDB-PC-41-3-K-316L — 1.4404/316L stainless steel sheet, molybdenum-enriched
LDB-PC-41-3-A — AW-1050A H24 aluminium sheet
LDO-PC-41-4 — hot-dip galvanized steel sheet

Product code example

Product code: **LDB-PC-41-3**

type

Installation method



ALNOR® ventilation systems
is a registered trademark protected by a technical patent. All modification rights reserved.

Flat tee plate bracket for LDBST

LDB-PT-41-4



Description

LDB-PT-41-4 tee plate brackets are ideal for joining the main structural strut, based on an LDBST strut channels, and a shorter section of a similar channel design. Since the tee plate bracket's down leg has only one hole, the fabricated joint requires an additional point of support. This piece is best used for building well-reinforced and neatly finished openwork frames of strut channels.
This product can be used outdoors with a hot-dip galvanized finish.

Available materials — Product code example

LDB-PT-41-4 — galvanized steel sheet
LDB-PT-41-4-K — 1.4301/304 stainless steel sheet
LDB-PT-41-4-K-316L — 1.4404/316L stainless steel sheet, molybdenum-enriched
LDB-PT-41-4-A — AW-1050A H24 aluminium sheet
LDO-PT-41-4 — hot-dip galvanized steel sheet

Product code example

Product code: **LDB-PT-41-4**

type

Dimensions

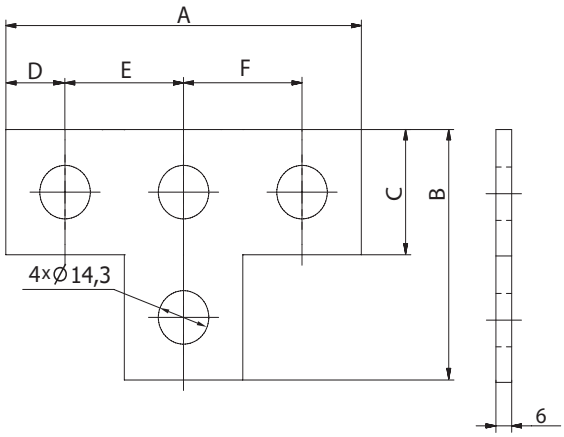

Product code	A (mm)	B (mm)	C (mm)	D (mm)	E (mm)	F (mm)
LDB-PT-41-4	136	89	41	21	47	47

Installation method

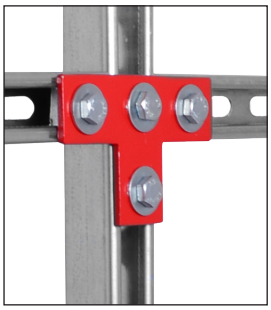

ALNOR® ventilation systems
is a registered trademark protected by a technical patent. All modification rights reserved.

Flat plate cross bracket for LDBST channel

LDB-PK-41-5



Description

LDB-PK cross brackets are designed for building four-arm joints based on LDBST Strut channels. The piece comes most handy in building channel strut frames. Strut channel frames can be used with the ST-ROF system of roof feet and supports to install AHUs and other roof-mounted system components. This product can be used outdoors with a hot-dip galvanized finish.

Available materials — Product code example

LDB-PK-41-5 — galvanized steel sheet
LDB-PK-41-5-K — 1.4301/304 stainless steel sheet
LDB-PK-41-5-K-316L — 1.4404/316L stainless steel sheet, molybdenum-enriched
LDB-PK-41-5-A — AW-1050A H24 aluminium sheet
LDO-PK-41-5 — hot-dip galvanized steel sheet

Product code example

Product code: **LDB-PK-41-5**

type

Dimensions

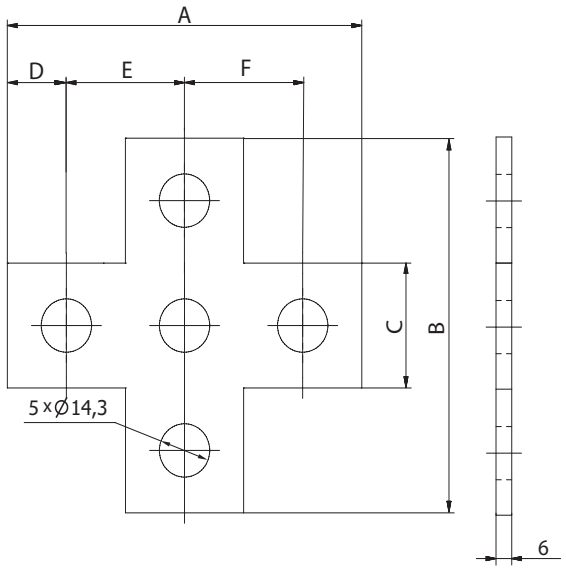

Product code	A (mm)	B (mm)	C (mm)	D (mm)	E (mm)	F (mm)
LDB-PK-41-5	136	136	41	21	47	47

Installation method

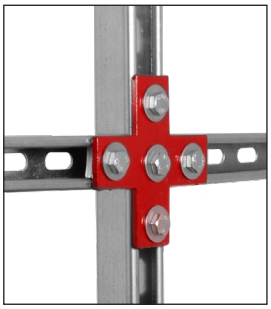

ALNOR® ventilation systems
is a registered trademark protected by a technical patent. All modification rights reserved.

Flat corner bracket for Strut channel

LDB-PTRA-45-41-4



Description

Corner brackets are the best solution for fabrication and reinforcement of flat joints between LDBST strut channel. The fittings allows adding two perpendicular strut channel, each at 45 degrees, to the main channel.
This product can be used outdoors with a hot-dip galvanized finish.

Available materials — Product code example

LDB-PTRA-45-41-4	— galvanized steel sheet
LDB-PTRA-45-41-4-K	— 1.4301/304 stainless steel sheet
LDB-PTRA-45-41-4-K-316L	— 1.4404/316L stainless steel sheet, molybdenum-enriched
LDB-PTRA-45-41-4-A	— AW-1050A H24 aluminium sheet
LDO-PTRA-45-41-4	— hot-dip galvanized steel sheet

Product code example
Product code: **LDB-PTRA-45-41-4**

type

Dimensions

LDB-PTRA-45-41-4

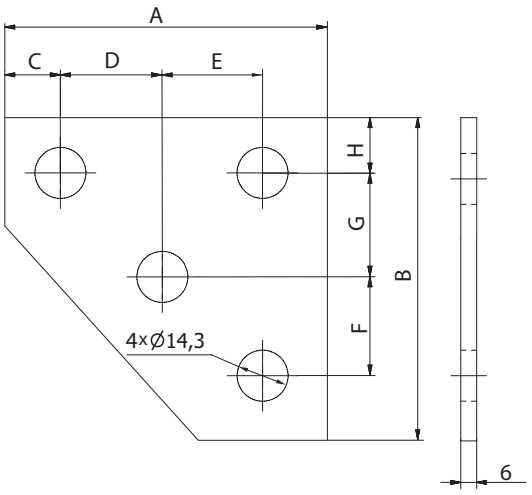

A (mm)	B (mm)	C (mm)	D (mm)	E (mm)	F (mm)	G (mm)
115	115	21	32	41	32	41

LDB-PTRA-90-41-3

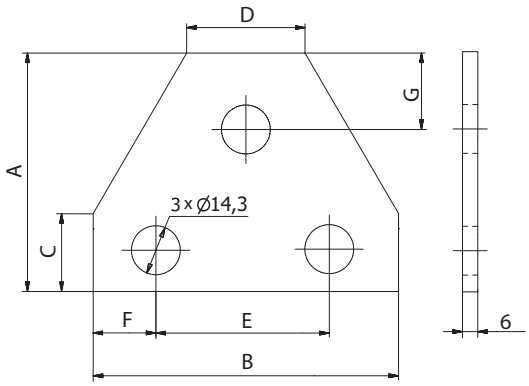

A (mm)	B (mm)	C (mm)	D (mm)	E (mm)	F (mm)	G (mm)
90	90	45	41	47	21	11

Installation method



ALNOR® ventilation systems
is a registered trademark protected by a technical patent. All modification rights reserved.

Channel angle bracket

LDB-BE-41



Description

L-type angle brackets are available in three versions which vary in the layout of openings. LDB-BE-41-2-2 units feature 2 × 2 holes on both legs to bolt LDBST channel at 90 degrees and under a similar load on both legs. Type LDB-BE-41-1-3 is used for joining one channel to another at the side with the holes in a T-shaped arrangement. Type LDB-BE-41-2-1 is used for joining a vertical channels with two more channels to form a T-shaped arrangement.
This product can be used outdoors with a hot-dip galvanized finish.

Available materials — Product code example

LDB-BE-41-2-1 — galvanized steel sheet
LDB-BE-41-2-1-K — 1.4301/304 stainless steel sheet
LDB-BE-41-2-1-K-316L — 1.4404/316L stainless steel sheet, molybdenum-enriched
LDB-BE-41-2-1-A — AW-1050A H24 aluminium sheet
LDO-BE-41-2-1 — hot-dip galvanized steel sheet

Product code example

Product code: **LDB-BE-41-2-1**

type

Dimensions

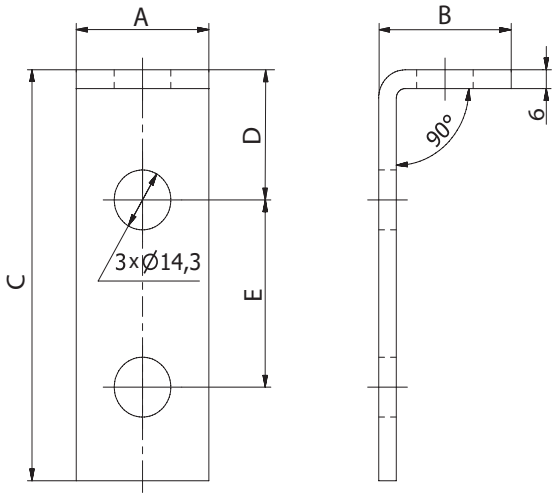

Product code	A (mm)	B (mm)	C (mm)	D (mm)	E (mm)	Number of holes: vertical leg	Number of holes: horizontal leg
LDB-BE-41-1-1	40	50	47	20.5	–	1	1
LDB-BE-41-1-1-R	40	56	41	20.5	–	1	1
LDB-BE-41-2-1	40	56	89	20.5	48	2	1
LDB-BE-41-2-2	40	85	102	33.5	42	2	2
LDB-BE-41-1-3	40	55	131	28.5	41	1	3

Installation method

LDB-BE-41-1-1-R



LDB-BE-41-2-1



LDB-BE-41-1-3



LDB-BE-41-2-2



ALNOR® ventilation systems
is a registered trademark protected by a technical patent. All modification rights reserved.

Channel angle bracket

LDB-BTRA-41-3



Description

Channel angle brackets are one-point fasteners for cross-oriented channels. The two holes on the horizontal leg help fastening without the need for an additional strut. The piece helps installing HVAC components and other objects having relatively low weight.
This product can be used outdoors with a hot-dip galvanized finish.

Available materials — Product code example

LDB-BTRA-41-3	— galvanized steel sheet
LDB-BTRA-41-3-K	— 1.4301/304 stainless steel sheet
LDB-BTRA-41-3-K-316L	— 1.4404/316L stainless steel sheet, molybdenum-enriched
LDB-BTRA-41-3-A	— AW-1050A H24 aluminium sheet
LDO-BTRA-41-3	— hot-dip galvanized steel sheet

Product code example
Product code: **LDB-BTRA-41-3**

type

Dimensions

LDB-BTRA-41-3

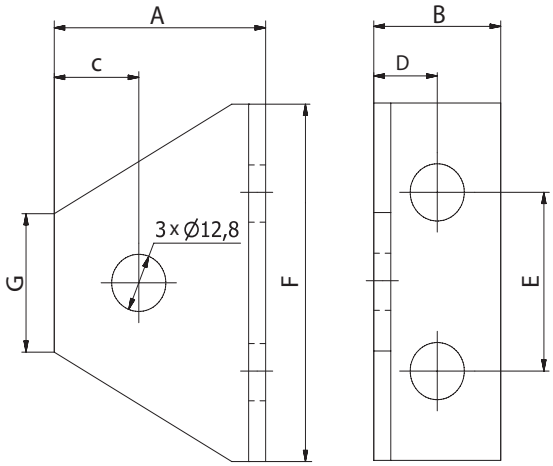

A (mm)	B (mm)	C (mm)	D (mm)	E (mm)	F (mm)	G (mm)
56	41	20	20,5	40	80	41

Installation method



ALNOR® ventilation systems
is a registered trademark protected by a technical patent. All modification rights reserved.

Corner gusset bracket

LDB-PBTR-41-5



Description

LDB-PBTR-41 channel corner gusset brackets are designed for building corner joints at extreme loads on each leg of the channels. The five holes allow fastening channels in 3 different directions.
This product can be used outdoors with a hot-dip galvanized finish.

Available materials — Product code example

LDB-PBTR-41	— galvanized steel sheet
LDB-PBTR-41-K	— 1.4301/304 stainless steel sheet
LDB-PBTR-41-K-316L	— 1.4404/316L stainless steel sheet, molybdenum-enriched
LDB-PBTR-41-A	— AW-1050A H24 aluminium sheet
LDO-PBTR-41	— hot-dip galvanized steel sheet

Product code example

Product code: **LDB-PBTR-41-5**

type

Dimensions

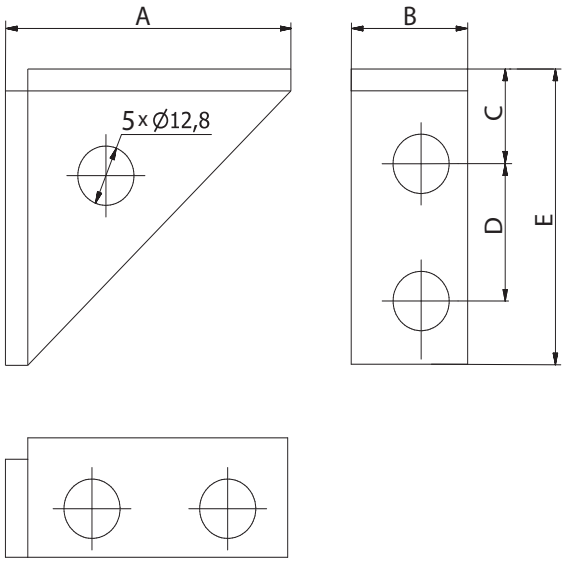

Product code	A (mm)	B (mm)	C (mm)	D (mm)	E (mm)
LDB-PBTR-41-5	107	48	37	48	107

Installation method



ALNOR® ventilation systems
is a registered trademark protected by a technical patent. All modification rights reserved.

Three-leg angle bracket

LDB-AN-TL-41-4



Description

LDB-AN-TL, LDB-AN-TR and LDB-AN-T three-leg c angle brackets are used for building joints between Strut channels in several directions. This solution helps to save the installation time and space, while providing a neat finish and a convenient method for setting up complex strut channel joints.
This product can be used outdoors with a hot-dip galvanized finish.

Available materials - Product code example

LDB-AN-TL-41-4	- galvanized steel sheet
LDB-AN-TL-41-4-K	- 1.4301/304 stainless steel sheet
LDB-AN-TL-41-4-K-316L	- 1.4404/316L stainless steel sheet, molybdenum-enriched
LDB-AN-TL-41-4-A	- AW-1050A H24 aluminium sheet
LDO-AN-TL-41-4	- hot-dip galvanized steel sheet

Product code example

Product code: **LDB-AN-TL-41-4**

type

Installation method



Dimensions

LDB-AN-TL-41-4

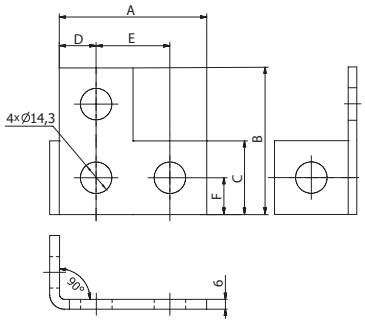

A (mm)	B (mm)	C (mm)	D (mm)	E (mm)	F (mm)
89	89	40	20	48	20

LDB-AN-TR-41-4

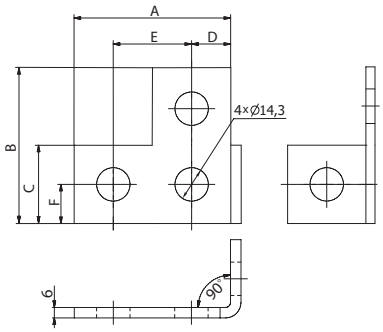

A (mm)	B (mm)	C (mm)	D (mm)	E (mm)	F (mm)
89	89	40	20	48	20

LDB-AN-T-41-4

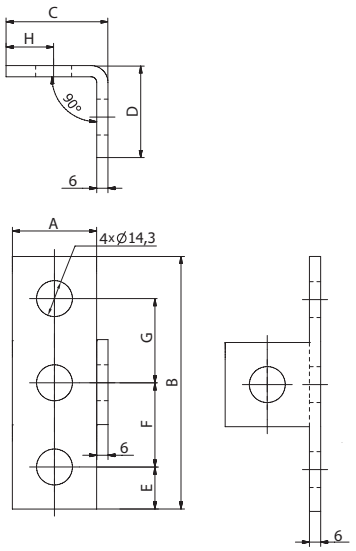

A (mm)	B (mm)	C (mm)	D (mm)	E (mm)	F (mm)	G (mm)
40	135	50	47	21	47	47

ALNOR® ventilation systems
is a registered trademark protected by a technical patent. All modification rights reserved.

Channel beam clamps

LDB-B-O-CLAMP



Description

LDB-B-O-CLAMP window beam clamps are designed for suspending the STRUT channel to structural rails. The clamp is installed by sliding a 21/41/2x41 channel into the vertical leg opening. Next, the clamp is bolted to the topside of the rail. The solution provides a quick and stable assembly system. This product can be used outdoors with a hot-dip galvanized finish.

Available materials — Product code example

LDB-B-O-CLAMP-21 — galvanized steel sheet
LDB-B-O-CLAMP-21-K — 1.4301/304 stainless steel sheet
LDB-B-O-CLAMP-21-K-316L — 1.4404/316L stainless steel sheet molybdenum-enriched
LDB-B-O-CLAMP-21-A — AW-1050A H24 aluminium sheet
LDO-B-O-CLAMP-21 — hot-dip galvanized steel sheet

Product code example

Product code: **LDB-B-O-CLAMP-21**

type _____

Dimensions

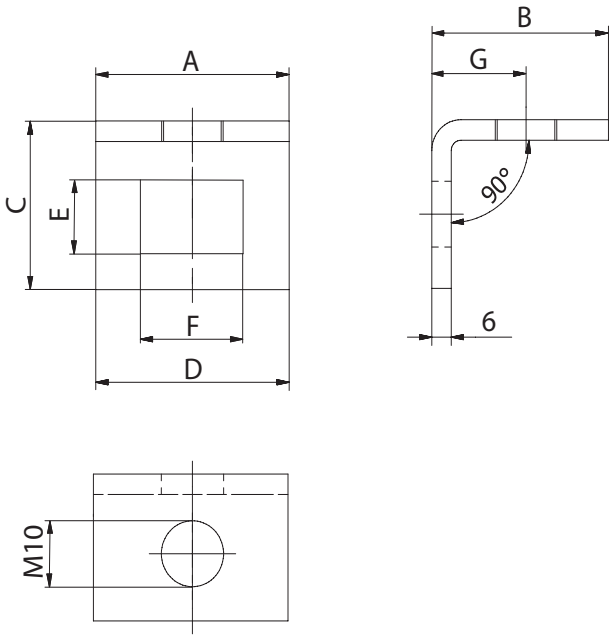

Product code	A (mm)	B (mm)	C (mm)	D (mm)	E (mm)	F (mm)	G (mm)
LDB-B-O-CLAMP-21	80	47	70	80	22	43	28
LDB-B-O-CLAMP-41	80	47	85	80	43	43	28
LDB-B-O-CLAMP-82	80	47	131	80	84	43	28

Product code	Mean force at failure (kN)
LDB-B-O-CLAMP-21	18.5
LDB-B-O-CLAMP-41	27.0
LDB-B-O-CLAMP-82	23.0

Installation method

LDB-B-O-CLAMP-21

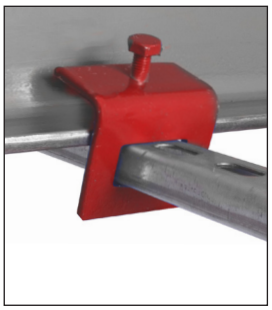

LDB-B-O-CLAMP-41

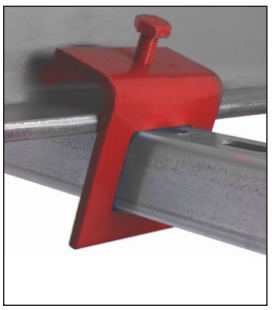

LDB-B-O-CLAMP-82

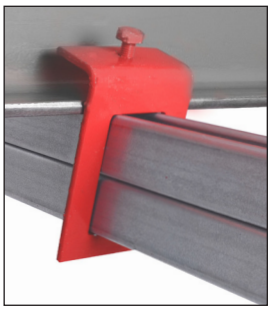

ALNOR® ventilation systems
is a registered trademark protected by a technical patent. All modification rights reserved.

U-Bolt channel beam clamp

LDB-U-BCLAMP

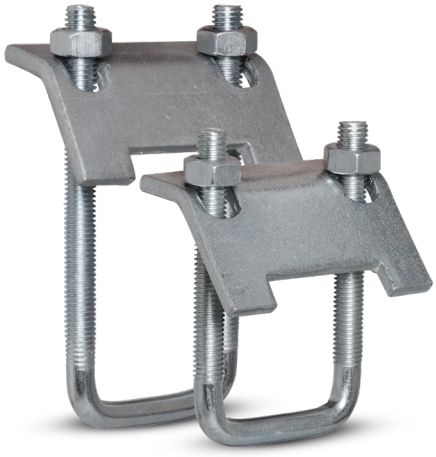

Description

LDB-U-BCLAMP unit is a U-bolt clamp for installation of LDB 41 and 21 channels. The Strut channel clamped by the U-bolt is pressed down with two M10 nuts to steel I-beams in the roof structure.
This product can be used outdoors with a hot-dip galvanized finish.

Available materials — Product code example

LDB-U-BCLAMP	— galvanized steel sheet
LDB-U-BCLAMP-K	— 1.4301/304 stainless steel sheet
LDB-U-BCLAMP-K-316L	— 1.4404/316L stainless steel sheet, molybdenum-enriched
LDB-U-BCLAMP-A	— AW-1050A H24 aluminium sheet
LDO-U-BCLAMP	— hot-dip galvanized steel sheet

Product code example

Product code: **LDB-U-BCLAMP-82**

type
bar length

Installation method

LDB-U-BCLAMP

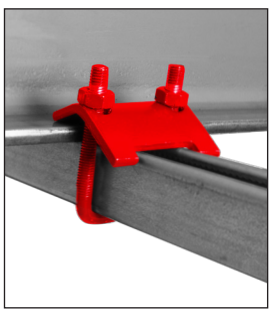

LDB-U-BCLAMP-82



Dimensions

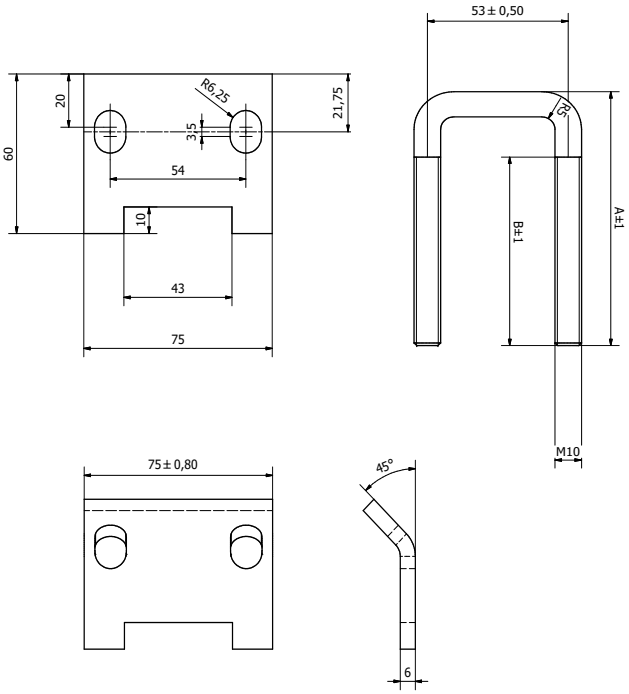

Product code	A (mm)	B (mm)
LDB-U-BCLAMP	90	75
LDB-U-BCLAMP-82	130	110

Product code	Mean force at failure (kN)
LDB-U-BCLAMP	13.0
LDB-U-BCLAMP-82	13.0

ALNOR® ventilation systems
is a registered trademark protected by a technical patent. All modification rights reserved.

Channel C-clamps

LDB-B-CLAMP/LDB-W-BCLAMP



Description

LDB-B-CLAMP channel C-clamps are designed for fastening STRUT channels crosswise to steel I-beams. The entire channel is supported across by a C-clamp, and both parts are clamped with a bolt. The clamped channel is then laid along a floor/roof I-beam for suspension of other objects. The bolt size is M10.

LDB-W-BCLAMP-10 channel C-clamps are designed for fastening STRUT channels crosswise to steel I-beams. A C-clamp is inserted into the channel and bolted transversely to a support beam to form a T-joint.

This product can be used outdoors with a hot-dip galvanized finish.

Available materials — Product code example

LDB-W-BCLAMP	— galvanized steel sheet
LDB-W-BCLAMP-K	— 1.4301/304 stainless steel sheet
LDB-W-BCLAMP-K-316L	— 1.4404/316L stainless steel sheet, molybdenum-enriched
LDB-W-BCLAMP-A	— AW-1050A H24 aluminium sheet
LDO-W-BCLAMP	— hot-dip galvanized steel sheet

Product code example

Product code: **LDB-W-BCLAMP**

type

Dimensions

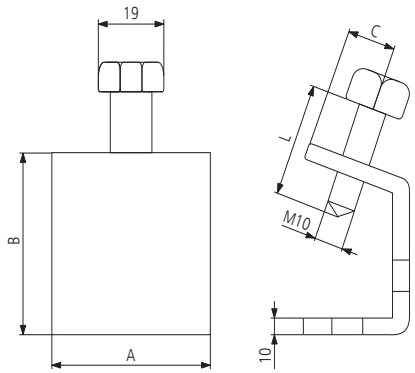

Product code	A (mm)	B (mm)	C (mm)	L (mm)
LDB-B-CLAMP	40	102	18	45
LDB-W-BCLAMP-10	30	60	15	50

Installation method

LDB-B-CLAMP

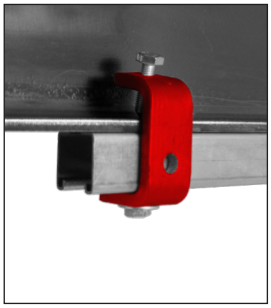

LDB-W-BCLAMP-10

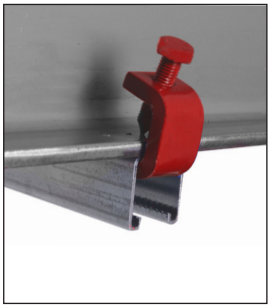

ALNOR® ventilation systems
is a registered trademark protected by a technical patent. All modification rights reserved.

Channel open angle bracket

LDB-BAN-41



Description

LDB-BAN-41 channel open angle brackets have a width compatible for building wide angle joints between 41 and 21 Strut channels. Depending on the leg-to-leg angle, it can form a joint at 30 , 45 , 60 , 120 , 135 and 150 degrees between two channels. This piece provides superior flexibility in building supports and suspension systems for HVAC installations and other structural applications. Angle brackets are often used for fabrication of heavy-duty cantilevers with a support arm length exceeding 1000 mm.
This product can be used outdoors with a hot-dip galvanized finish.

Available materials — Product code example

LDB-BAN-41-45-2 — galvanized steel sheet
LDB-BAN-41-45-2-K — 1.4301/304 stainless steel sheet
LDB-BAN-41-45-2-K-316L — 1.4404/316L stainless steel sheet, molybdenum-enriched
LDB-BAN-41-45-2-A — AW-1050A H24 aluminium sheet
LDO-BAN-41-45-2 — hot-dip galvanized steel sheet

Product code example

Product code: **LDB-BAN-41-45-2**

type _____

Dimensions

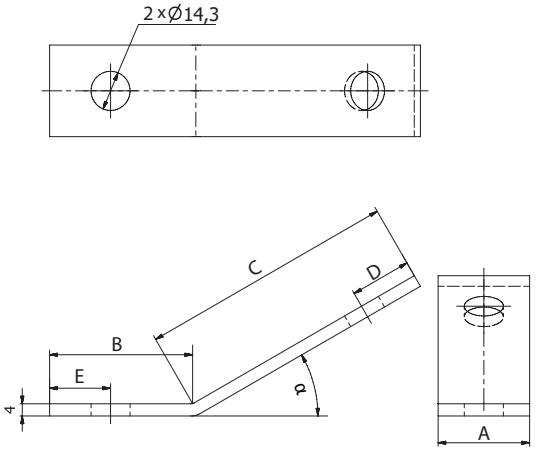

Product code	A (mm)	B (mm)	C (mm)	D (mm)	E (mm)	α [°]
LDB-BAN-41-30-2	40	52	97	21	21	30
LDB-BAN-41-45-2	40	52	97	21	21	45
LDB-BAN-41-45-4	40	92	89	21	21	45
LDB-BAN-41-60-2	40	52	97	21	21	60
LDB-BAN-41-120-2	40	69	108	21	21	120
LDB-BAN-41-135-2	40	69	108	21	21	135
LDB-BAN-41-150-2	40	69	108	21	21	150

Installation method

Installation method A



Installation method B



ALNOR® ventilation systems
is a registered trademark protected by a technical patent. All modification rights reserved.

Channel Z-bracket

LDB-Z



Description

LDB-Z Z-brackets are designed for fastening of intersecting channel. Depending on their size, Z-brackets can be used for joining LDBST 21 and 41 channels; LDB-Z-82-4 Z-brackets are suitable for 2 x 41 channels. This bracket is suitable for light-duty joints.
This product can be used outdoors with a hot-dip galvanized finish.

Available materials - Product code example

LDB-Z-41-3	- galvanized steel sheet
LDB-Z-41-3-K	- 1.4301/304 stainless steel sheet
LDB-Z-41-3-K-316L	- 1.4404/316L stainless steel sheet, molybdenum-enriched
LDB-Z-41-3-A	- AW-1050A H24 aluminium sheet
LDO-Z-41-3	- hot-dip galvanized steel sheet

Product code example

Product code: **LDB-Z-41-3**

type

Dimensions

LDB-Z-41-3

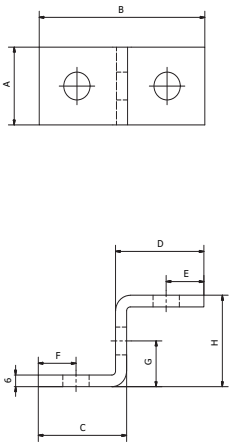

LDB-Z-41-4

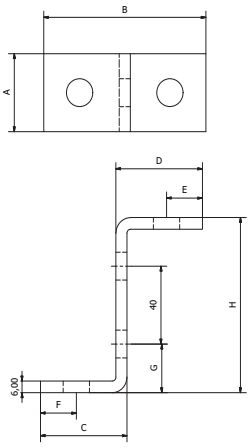

LDB-Z-82-4

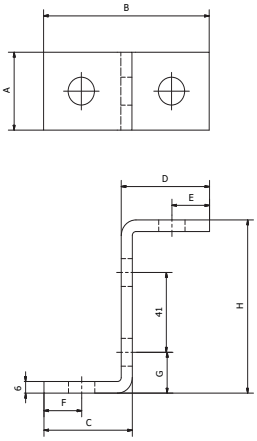

Code	A [mm]	B [mm]	C [mm]	D [mm]	E [mm]	F [mm]	G [mm]	H [mm]
LDB-Z-41-3	40	90	48	48	21	21	24	47
LDB-Z-41-4	40	88	47	47	19.5	19.5	25	90
LDB-Z-82-4	40	90	48	48	21	21	21	89

Installation method

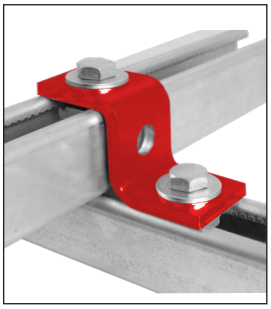

ALNOR® ventilation systems
is a registered trademark protected by a technical patent. All modification rights reserved.

Channel U-bracket

LDB-U



Description

LDB-U U-brackets are designed for fastening of intersecting Strut channels. Depending on their size, saddle brackets can be used for joining LDBST 21 and 41 Strut channels; LDB-U-82-3 and LDB-U-41-6 U-brackets are suitable for 2 x 41 Strut channels. The bolting on both sides of the intersecting channel strut allows fabrication of joints rated at higher loads. This solution comes very handy for building H-frames or racks based on roof feet and supports.
This product can be used outdoors with a hot-dip galvanized finish.

Available materials - Product code example

LDB-U-21-3	- galvanized steel sheet
LDB-U-21-3-K	- 1.4301/304 stainless steel sheet
LDB-U-21-3-K-316L	- 1.4404/316L stainless steel sheet, molybdenum-enriched
LDB-U-21-3-A	- AW-1050A H24 aluminium sheet
LDO-U-21-3	- hot-dip galvanized steel sheet

Product code example

Product code: **LDB-U-21-3**

type

Dimensions

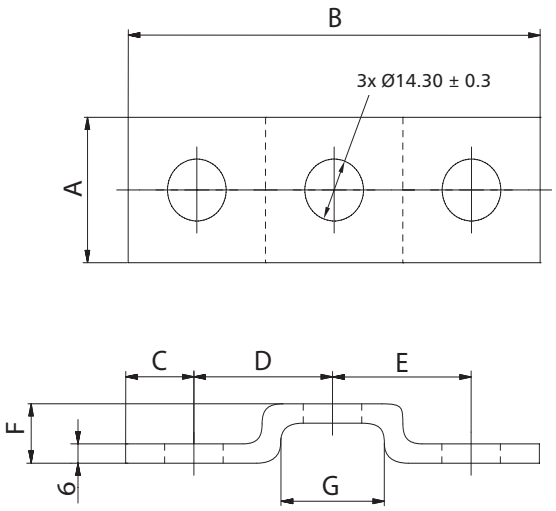

Product code	A (mm)	B (mm)	C (mm)	D (mm)	E (mm)	F (mm)	G (mm)
LDB-U-21-3	40	136	19.5	48.5	48.5	27	42
LDB-U-41-3	40	136	19.5	48.5	48.5	48	40
LDB-U-82-3	40	136	19.5	48.5	48.5	87	42
LDB-U-41-6*	40	177	19.5	48	48	48	83

*The spacing between the central holes is 42 mm.

Product code	Number of holes (pcs)
LDB-U-21-3	3
LDB-U-41-3	3
LDB-U-82-3	3
LDB-U-41-6	6

Installation method

LDB-U-21-3

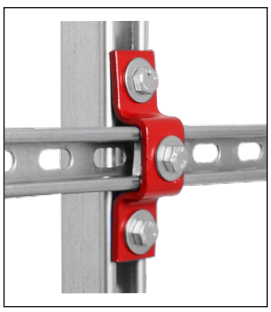

LDB-U-41-6

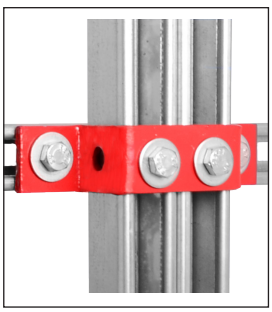

ALNOR® ventilation systems
is a registered trademark protected by a technical patent. All modification rights reserved.

C-bracket for Strut channels

LDB-DCB-41-4



Description

LDB-DCB-41-4 double channel C-brackets are designed for binding the LDBST-41 channel one on top of another. The four holes help firmly bolt two channels together. It is most recommended for building 41x82 channels by combining two 41x41 channels to increase the load capacity and install heavy HVAC-R.1 system components.
This product can be used outdoors with a hot-dip galvanized finish.

Available materials — Product code example

LDB-DCB-41-4	— galvanized steel sheet
LDB-DCB-41-4-K	— 1.4301/304 stainless steel sheet
LDB-DCB-41-4-K-316L	— 1.4404/316L stainless steel sheet, molybdenum-enriched
LDB-DCB-41-4-A	— AW-1050A H24 aluminium sheet
LDB-DCB-41-4	— hot-dip galvanized steel sheet

Product code example

Product code: **LDB-DCB-41-4**

type

Dimensions

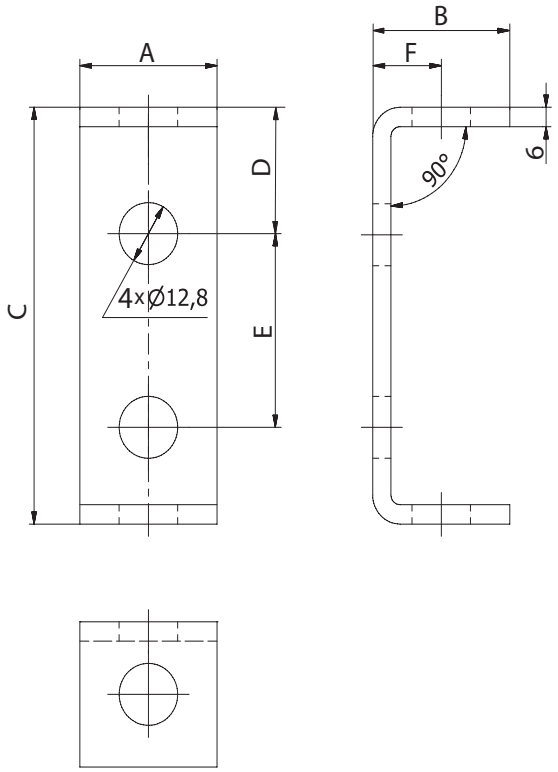

Product code	A (mm)	B (mm)	C (mm)	D (mm)	E (mm)	F (mm)
LDB-DCB-41-4	40	48	98	27	40	27

Installation method



ALNOR® ventilation systems
is a registered trademark protected by a technical patent. All modification rights reserved.

Base plate for LDBST channel

LDB-STP-AN-41-3

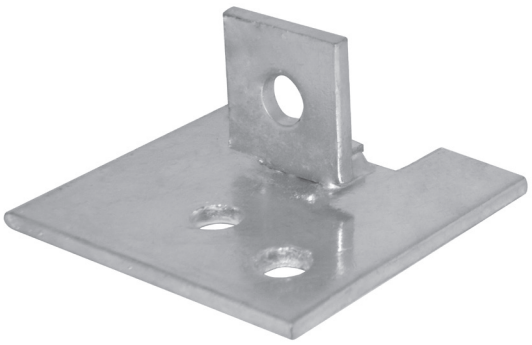

Description

LDB-STP-AN-41-3 base plates are fixtures designed for STRUT channels. There are two holes in the baseplate for fastening using anchors and bolts to the floor; the upright hole is fastened to an LDBST channel.
This product can be used outdoors with a hot-dip galvanized finish.

Available materials - Product code example

LDB-STP-AN-41-3	- galvanized steel sheet
LDB-STP-AN-41-3-K	- 1.4301/304 stainless steel sheet
LDB-STP-AN-41-3-K-316L	- 1.4404/316L stainless steel sheet, molybdenum-enriched
LDB-STP-AN-41-3-A	- AW-1050A H24 aluminium sheet
LDO-STP-AN-41-4	- hot-dip galvanized steel sheet

Product code example

Product code: **LDB-STP-AN-41-3**

type

Dimensions

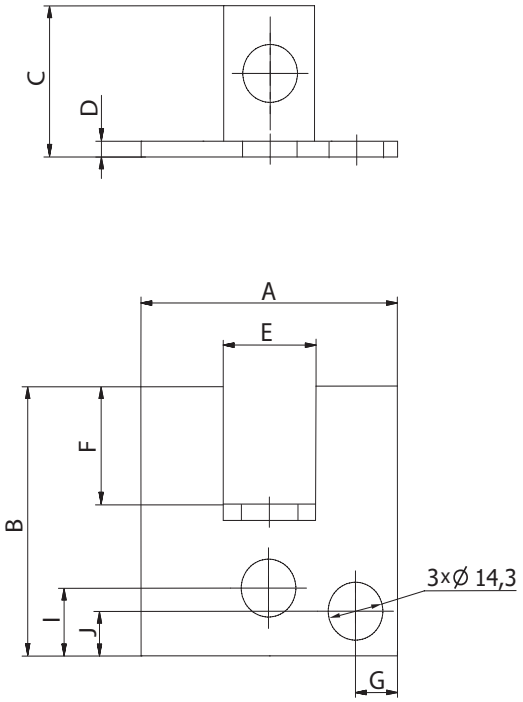

A (mm)	B (mm)	C (mm)	D (mm)	E (mm)	F (mm)	G (mm)	H (mm)	I (mm)
101	101	21	6	45	21	21	51	30

Installation method



ALNOR® ventilation systems
is a registered trademark protected by a technical patent. All modification rights reserved.

Base plate for STRUT channel

LDB-PFIX-41-4-TOP

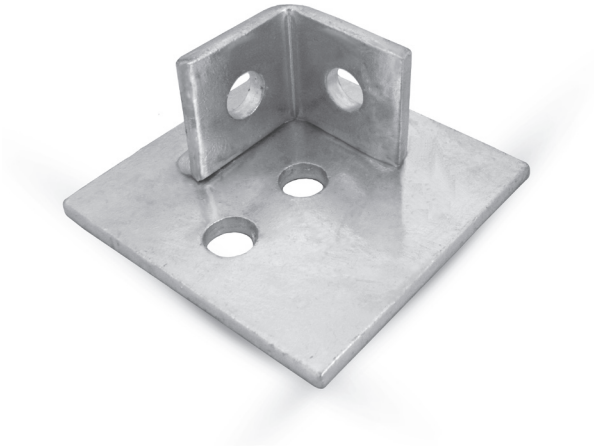

Description

LDB-PFIX-41-4-TOP base plates are fixtures designed for STRUT channel. There are two holes in the baseplate for fastening using anchors and bolts to the floor; the two upright brace holes are fastened to an LDBST channel.
This product can be used outdoors with a hot-dip galvanized finish.

Available materials - Product code example

LDB-PFIX-41-4-TOP	- galvanized steel sheet
LDB-PFIX-41-4-TOP-K	- 1.4301/304 stainless steel sheet
LDB-PFIX-41-4-TOP-K-316L	- 1.4404/316L stainless steel sheet, molybdenum-enriched
LDB-PFIX-41-4-TOP-A	- AW-1050A H24 aluminium sheet
LDO-PFIX-41-4-TOP	- hot-dip galvanized steel sheet

Product code example

Product code: **LDB-PFIX-41-4-TOP**

type

Dimensions

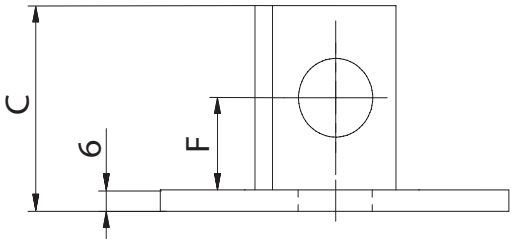

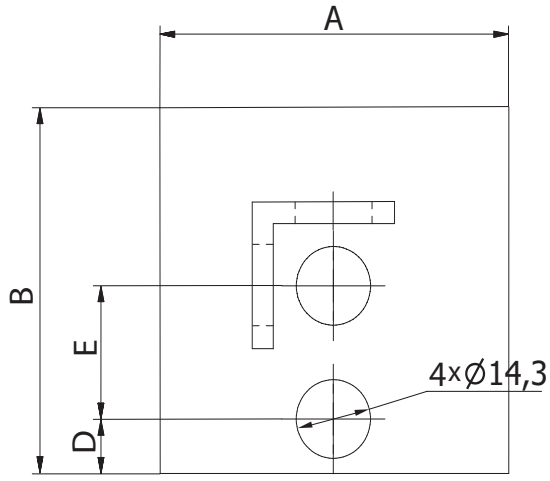

Product code	A (mm)	B (mm)	C (mm)	D (mm)	E (mm)	F (mm)
LDB-PFIX-41-4-TOP	100	100	46	21	30	20

Installation method

Installation method A



Installation method B



ALNOR® ventilation systems
is a registered trademark protected by a technical patent. All modification rights reserved.

Double channel base plate

LDB-STP-82-4-2

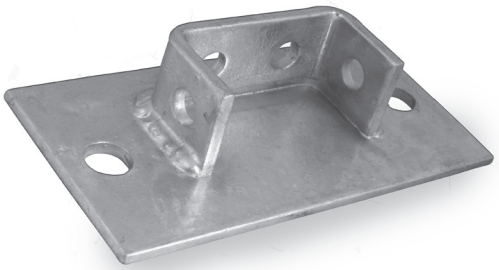

Description

LDB-STP-82-4-2 double channel base plates are designed for back-to-back combining two 41 channels and attaching them to the floor. This helps to achieve a very stiff vertical or horizontal channel to which other fixtures, HVAC or structural components can be attached.
This product can be used outdoors with a hot-dip galvanized finish.

Available materials - Product code example

LDB-STP-82-4-2	- galvanized steel sheet
LDB-STP-82-4-2 -K	- 1.4301/304 stainless steel sheet
LDB-STP-82-4-2-K-316L	- 1.4404/316L stainless steel sheet, molybdenum-enriched
LDB-STP-82-4-2-A	- AW-1050A H24 aluminium sheet
LDO-STP-82-4-2	- hot-dip galvanized steel sheet

Product code example
Product code: **LDB-STP-82-4-2**

type

Dimensions

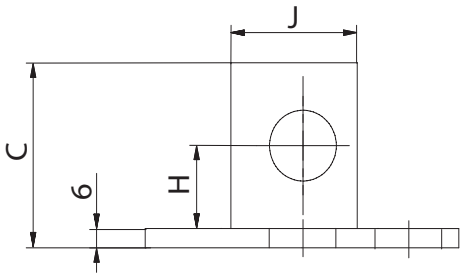

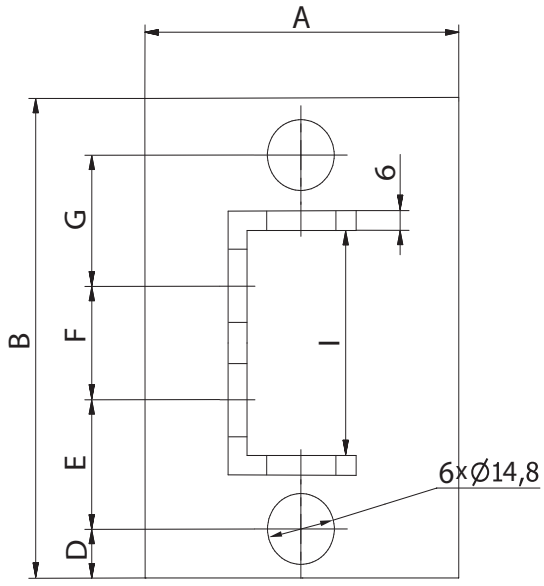

A (mm)	B (mm)	C (mm)	D (mm)	E (mm)	F (mm)	G (mm)	H (mm)	I (mm)	J (mm)
100	200	46	25	55	40	55	26	83	48

Installation method



ALNOR® ventilation systems
is a registered trademark protected by a technical patent. All modification rights reserved.

Heavy-duty wing bracket

LDB-CHTB-41-6-2



Description

LDB-CHTB channel wing brackets are designed for building T-joints between channels where extremely high loads are applied to the upright channel. The C-clamp wraps the upright channel from three sides, and its 6 holes help install a sufficient number of bolts/screws to withstand the loads from above. This product can be used outdoors with a hot-dip galvanized finish.

Available materials — Product code example

LDB-CHTB-41-6-2 — galvanized steel sheet
LDB-CHTB-41-6-2-K — 1.4301/304 stainless steel sheet
LDB-CHTB-41-6-2-K-316L — 1.4404/316L stainless steel sheet, molybdenum-enriched
LDB-CHTB-41-6-2-A — AW-1050A H24 aluminium sheet
LDO-CHTB-41-6-2 — hot-dip galvanized steel sheet

Product code example

Product code: **LDB-CHTB-41-6-2**

type

Dimensions

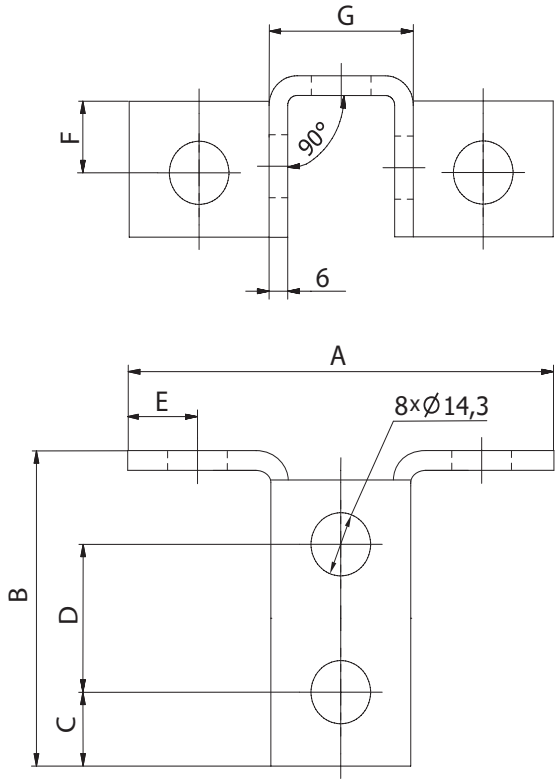

Product code	A (mm)	B (mm)	C (mm)	D (mm)	E (mm)	F (mm)	G (mm)
LDB-CHTB-41-6-2	140	100	21	48	20	20	56

Installation method



ALNOR® ventilation systems
is a registered trademark protected by a technical patent. All modification rights reserved.

Heavy-duty external coupler

LDB-EXT-U



Description

LDB-EXT-U channel external couplers wrap the joint made of two Strut channels sized 41 or 21. Aside from the 4 holes for bolting STRUT channels from the top, the side walls of the channel tie bolster the joint to prevent torsion.
This product can be used outdoors with a hot-dip galvanized finish.

Available materials — Product code example

LDB-EXT-U-21-4	— galvanized steel sheet
LDB-EXT-U-21-4-K	— 1.4301/304 stainless steel sheet
LDB-EXT-U-21-4-K-316L	— 1.4404/316L stainless steel sheet, molybdenum-enriched
LDB-EXT-U-21-4-A	— AW-1050A H24 aluminium sheet
LDO-EXT-U-21-4	— hot-dip galvanized steel sheet

Product code example
Product code: **LDB-EXT-U-21-4**

type

Dimensions

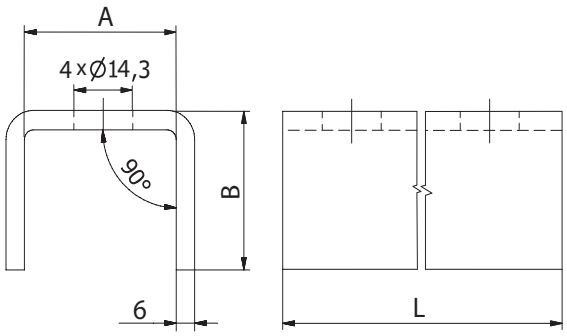

Product code	A (mm)	B (mm)	L (mm)
LDB-EXT-U-21-4	43	27	184
LDB-EXT-U-41-4	43	47	184

Installation method

LDB-EXT-U-21-4

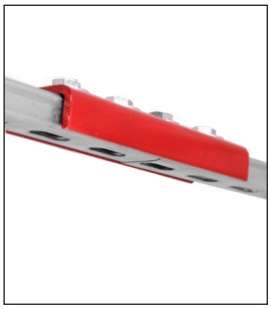

LDB-EXT-U-41-4

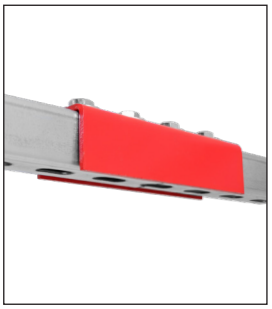

ALNOR® ventilation systems
is a registered trademark protected by a technical patent. All modification rights reserved.

Toe beam clamp for LDBST Strut channels

LDB-WP-41



Description

LDB-WP toe beam clamps are the simplest fasteners for bolted suspension of LDBST channel to a steel beam with foot. This piece is often used for low-duty installations. Toe beam clamps are fastened to a beam's foot with an M10 bolt which passes through a hole in a STRUT channe; and a beam clamp hole. This product can be used outdoors with a hot-dip galvanized finish.

Available materials — Product code example

LDB-WP-41 — galvanized steel sheet
LDB-WP-41-K — 1.4301/304 stainless steel sheet
LDB-WP-41-K-316L — 1.4404/316L stainless steel sheet, molybdenum-enriched
LDB-WP-41-A — AW-1050A H24 aluminium sheetLDO-WP-41 — hot-dip galvanized steel sheet

Product code example

Product code: **LDB-WP-41**

type

Dimensions

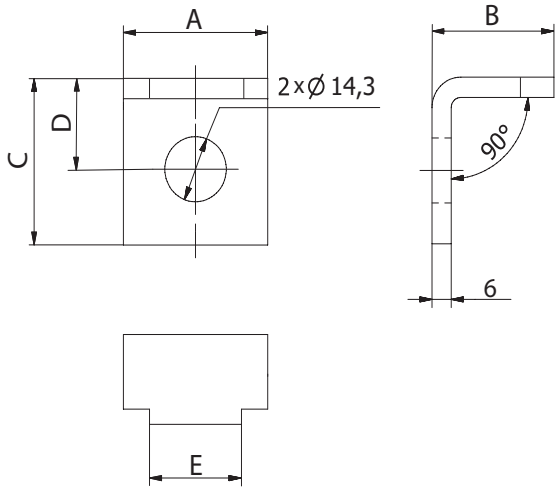

Product code	A (mm)	B (mm)	C (mm)	D (mm)	E (mm)
LDB-WP-41	40	29	54	24	20

Installation method

LDB-WP-41

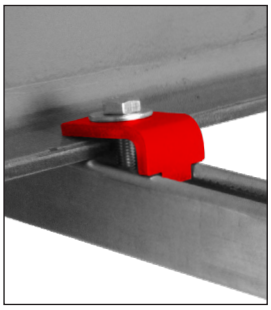

ALNOR® ventilation systems
is a registered trademark protected by a technical patent. All modification rights reserved.

Double adjustable channel brace

LDB-BAN-R2-41

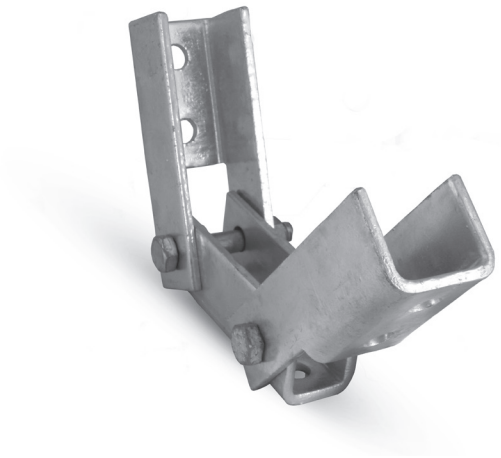

Dimensions

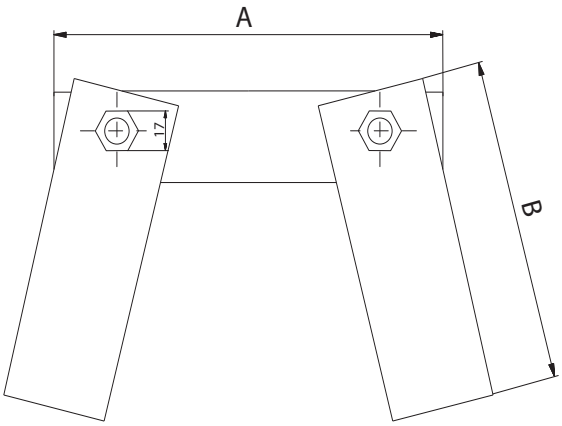

Product code	A (mm)	B (mm)
LDB-BAN-R2-41	136	147

Description

LDB-BAN-R2 double adjustable channel brace feature two holes in each of the two articulated legs and two holes in the base channel. The legs are bolted to the base channel to allow a smooth adjustment of the angle between the Strut channels and the base channel. The double adjustable channel brace comes handy whenever there are inclination differences between the support points, or whenever you need to set a channel strut at a non-standard angle.
This product can be used outdoors with a hot-dip galvanized finish.

Available materials — Product code example

LDB-BAN-R2-41	— galvanized steel sheet
LDB-BAN-R2-41-K	— 1.4301/304 stainless steel sheet
LDB-BAN-R2-41-K-316L	— 1.4404/316L stainless steel sheet, molybdenum-enriched
LDB-BAN-R2-41-A	— AW-1050A H24 aluminium sheet
LDO-BAN-R2-41	— hot-dip galvanized steel sheet

Product code example
Product code: **LDB-BAN-R2-41**

type

Installation method

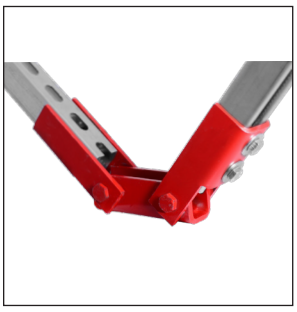

ALNOR® ventilation systems
is a registered trademark protected by a technical patent. All modification rights reserved.

LDB & LDBST channel end cap

Z-LDB

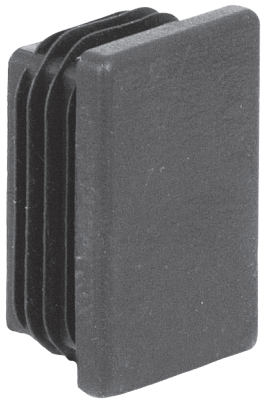

Description

The end cap provides closure at the ends of LDB and LDBST channels. The piece provides a neat finish to the ventilation support structure ends and makes sharp channel edges safe to touch.
End caps for STRUT channels are labelled with ST at the end of the product code, e.g. Z-LDB-41-ST.

Product code example
Product code: **Z-LDB-30**

type

Dimensions

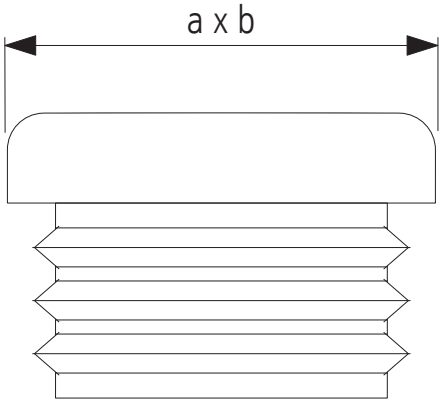

Product code	*a x b (mm)*
Z-LDB-20	30 x 20
Z-LDB-30	30 x 30
Z-LDB-45	30 x 45
Z-LDB-21	41 x 21
Z-LDB-41	41 x 41
Z-LDB-21-ST	41 x 41
Z-LDB-41-ST	41 x 41

Installation method



ALNOR® ventilation systems
is a registered trademark protected by a technical patent. All modification rights reserved.

Channel vibration damper

GPK

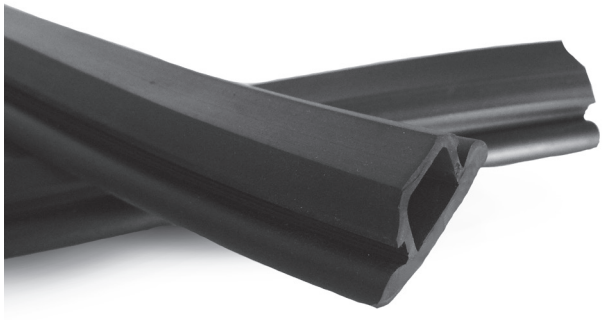

Description

GPK vibration dampers attenuate noise generated due to vibration between Strut channels and ventilation ducts. Made from EPDM rubber.

Product code example

Product code: **GPK**

type

Dimensions

GPK

For LDB channels: 30x30 mm, 45x30 mm, 20x30 mm

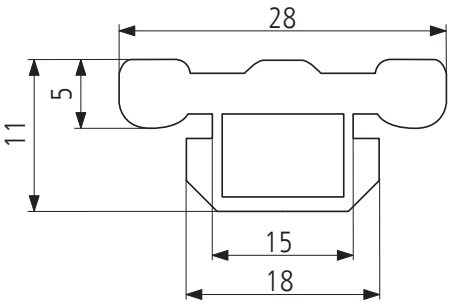

GPK-41

For LDB Strut channels: 41x41 mm, 41x21 mm

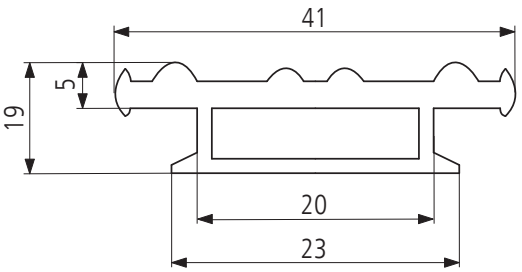

Installation method

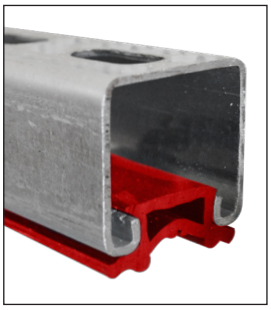

ALNOR® ventilation systems
is a registered trademark protected by a technical patent. All modification rights reserved.

Channel fixing kit

SNP-0806-SR-NK/SNP-1008-SR-NK

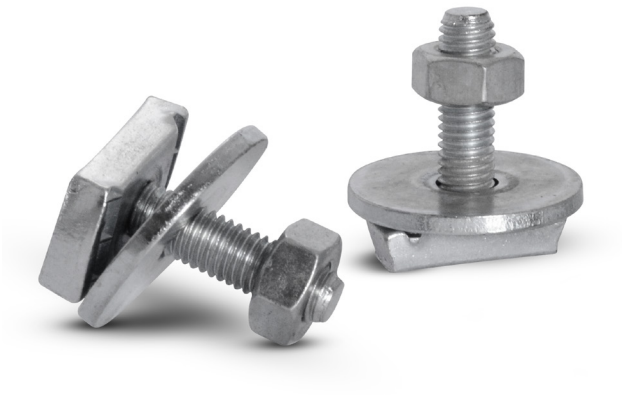

Description

SNP channel nuts with large 40 mm washers are designed for fastening suspension rings to LDBST Strut channels or for installation in roof feet for fastening machinery, e.g. split A/C outdoor units.

Available materials — Product code example
SNP-... — galvanized steel sheet

Product code example
Product code: **SNP-0806-SR-NK**

type

Dimensions

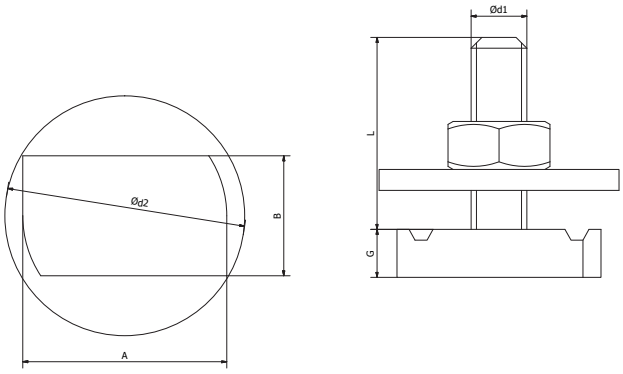

Product code	Bolt (mm)	$Ød_2$ (mm)	$Ød_1$ (mm)	A (mm)	B (mm)	G (mm)	L (mm)
SNP-0806-SR-NK	M8	40	8	20	34	6	36
SNP-1008-SR-NK	M10	40	10	20	34	8	34

Product code	Tightening torque (Nm)
SNP-0806-SR-NK	20.6
SNP-1008-SR-NK	35.7

Installation method



ALNOR® ventilation systems
is a registered trademark protected by a technical patent. All modification rights reserved.

Channel nuts

SNP/SNL/SNKL

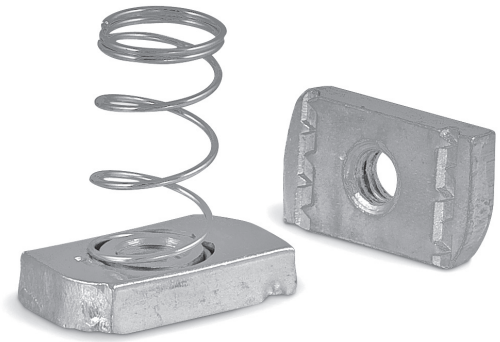

Description

SNP, SNL and SNKL unistrut channel nuts are designed for fastening PG threaded rods to LDBST Strut channels.
SNL and SNKL units feature springs to eliminate the nut vibration from the channel strut. The spring also facilitates securing the unistrut channel nut.

SNP - without a spring
SNL - with a long spring for 41x41 channels
SNKL - with a short spring for 41x21 channels

Available materials - Product code example
SNL-... - galvanized steel sheet

Product code example
Product code: **SNL-0806**

type

Dimensions

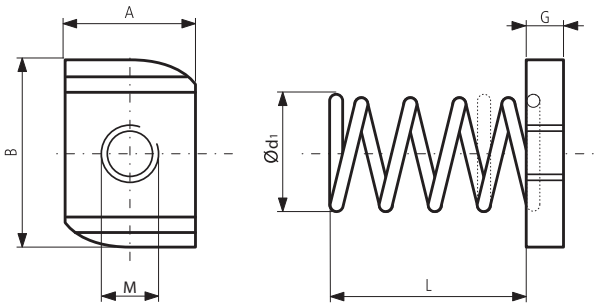

Product code	M (mm)	Ød1 (mm)	A (mm)	B (mm)	G (mm)	L (mm)
SNP-0606	M6	–	20	35	6	–
SNP-0806	M8	–	20	35	6	–
SNP-1008	M10	–	20	35	8	–
SNP-1212	M12	–	20	35	12	–
SNL-0606	M6	18	20	35	6	30
SNL-0806	M8	18	20	35	6	30
SNL-1008	M10	18	20	35	8	30
SNL-1212	M12	18	20	35	12	30
SNKL-0606	M6	18	20	35	6	15
SNKL-0806	M8	18	20	35	6	15
SNKL-1008	M10	18	20	35	8	15
SNKL-1212	M12	18	20	35	12	15

ALNOR® ventilation systems
is a registered trademark protected by a technical patent. All modification rights reserved.

Channel nuts

SNP/SNL/SNKL

Technical data

Code	Tightening torque [Nm]	Maximum load F [N[
SNP-0606	19,6	8700
SNP-0806	20,6	8700
SNP-1008	35,7	10100
SNP-1212	51,0	15800
SNL-0606	19,6	8700
SNL-0806	20,6	8700
SNL-1008	35,7	10100
SNL-1212	51,0	15800
SNKL-0606	19,6	8700
SNKL-0806	20,6	8700
SNKL-1008	35,7	10100
SNKL-1212	51,0	15800

Load diagram

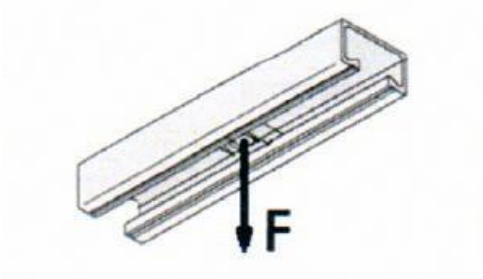

Installation method

SNL

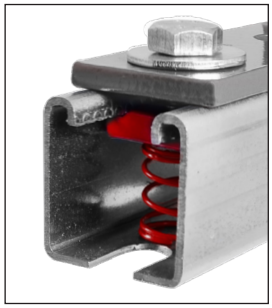

SNKL



ALNOR® ventilation systems
is a registered trademark protected by a technical patent. All modification rights reserved.

Threaded rod for ventilation installations

PG



Description

Threaded rods are usually used as suspension bolts for HVAC systems. The threaded rods can carry suspension rings, beam clamps, and L-, V-, and Z-type suspension brackets. The threaded rods are usually combined with unistrut channel nuts, NKS nuts and LDB channels.

Available materials — Product code example
PG...-... — galvanized steel sheet

Product code example
Product code: **PG10-1**

type

Dimensions

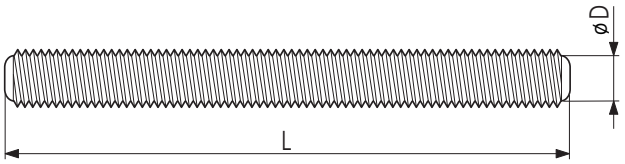

Product code	*ØD (mm)*	*Length L (mm)*
PG6-1	M6	1000
PG6-2	M6	2000
PG6-3	M6	3000
PG8-1	M8	1000
PG8-2	M8	2000
PG8-3	M8	3000
PG10-1	M10	1000
PG10-2	M10	2000
PG10-3	M10	3000
PG12-1	M12	1000
PG12-2	M12	2000
PG12-3	M12	3000

Technical data

Breaking forces of threaded rods PG

Thread	*Breaking power [N]*
M6	8040
M8	14600
M10	23200
M12	33700

ALNOR® ventilation systems
is a registered trademark protected by a technical patent. All modification rights reserved.

Beam clamps for threaded rods

B-CLB

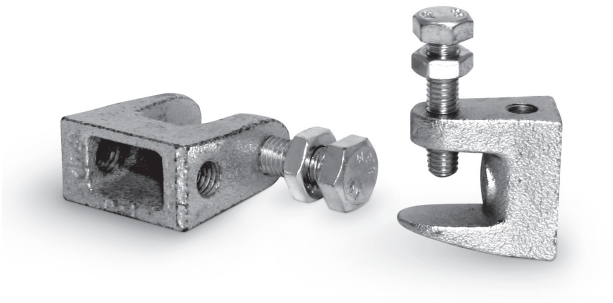

Description

B-CLB beam clamps are fixtures for attaching threaded rods in suspension systems for electrical wiring, heat piping, water piping, ventilation ducts, and other building installations. The beam clamp is usually fastened with a steel set screw to steel beams / trusses of various forms.

Note: Tighten the screw to stop by hand; next, tighten by 1/2 of a full turn with a wrench. Then, tighten the nut.

Available materials — Product code example
B-CLB-... — galvanized steel sheet

Product code example
Product code: **B-CLB-M08**

type

Dimensions

B-CLB

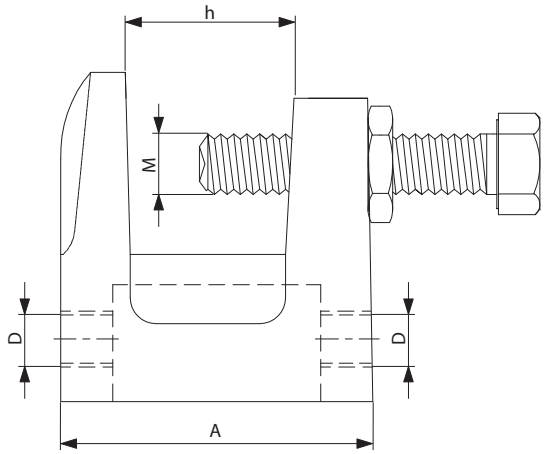

B-CLB-M

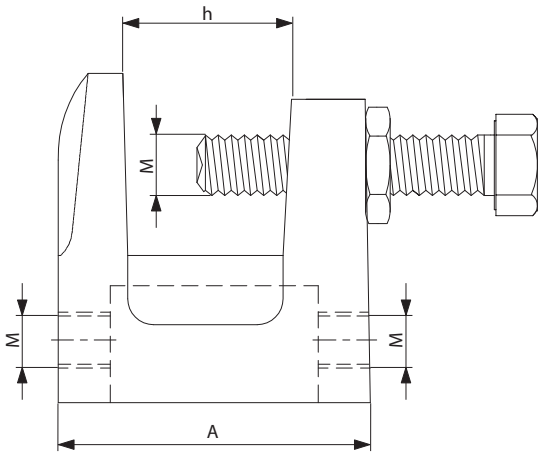

Product code	*h (mm)*	*A (mm)*	*M (mm)*	*Ød (mm)*
B-CLB-07	18	35	M6	7
B-CLB-09	18	35	M8	9
B-CLB-11	25	45	M10	11
B-CLB-13	25	45	M12	13
B-CLB-M06	16	30	M6	–
B-CLB-M08	18	35	M8	–
B-CLB-M10	23	45	M10	–

Product code	*Specific load F_k (kN)*	*Recommended load F_k (kN)*	*Mean force at failure (kN)*
PG6-1	2.4	1.2	8.5
PG6-2	4.0	2.0	19.5
PG6-3	4.6	2.3	20.5

ALNOR® ventilation systems
is a registered trademark protected by a technical patent. All modification rights reserved.

Steel drop-in anchors
TK



Description

Steel / expanding drop-in anchors are used for fastening components in concrete walls and floors. They are most often combined with other ventilation elements, including SR2G stud bolts and PG threaded rods.
The recommended tool for installing drop-in anchors is TK-DOB driver, which drives the anchor's core inward, spreads the expanding arms, and fits the drop-in anchor tightly into the concrete.

TK-DOB driver



Available materials — Product code example
TK...-... — galvanized steel sheet

Product code example
Product code: **TK8-3**

type

Dimensions

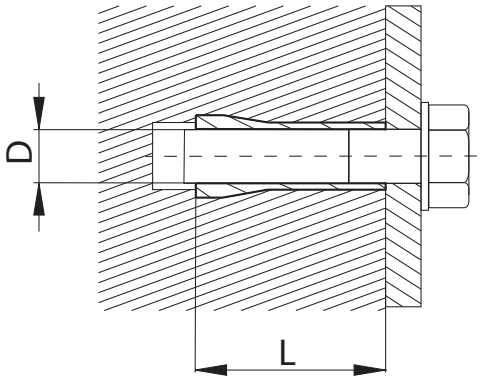

Product code	*ØD (mm)*	*Length L (mm)*
TK6-3	M6	30
TK8-3	M8	30
TK8-4	M8	40
TK10-4	M10	40
TK10-5	M10	50

Product code	*Recommended load F_{dop} (kN) (for concrete class C20/25)*
TK6-3	1.5
TK8-3	1.8
TK8-4	1.8
TK10-4	3.0
TK10-5	3.0

ALNOR® ventilation systems
is a registered trademark protected by a technical patent. All modification rights reserved.

Brass drop-in anchors

TK-MO



Description

TK-MO brass drop-in anchors are intended for fastening low-duty components to hard materials, including concrete, natural stone, and brick. TK-MO anchors are compatible with metric screws and threaded rods sized from M6 to M12. Once driven snugly into an opening, TK-MO anchors provide a strong fastening point.

Available materials — Product code example
TK...-MO — brass

Product code example
Product code: **TK8-MO**

type

Dimensions

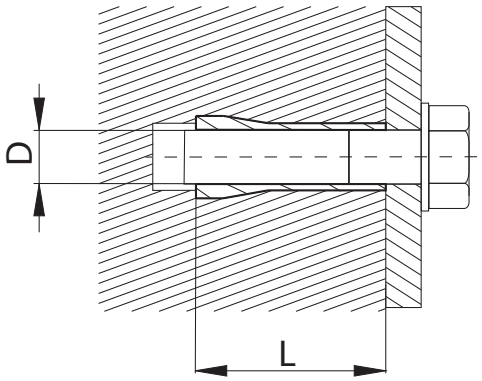

Product code	*ØD (mm)*	*Length L (mm)*
TK6-MO	M6	30
TK8-MO	M8	30
TK10-MO	M10	40
TK12-MO	M10	50

ALNOR® ventilation systems
is a registered trademark protected by a technical patent. All modification rights reserved.

Steel screws

SRS/SRS-D

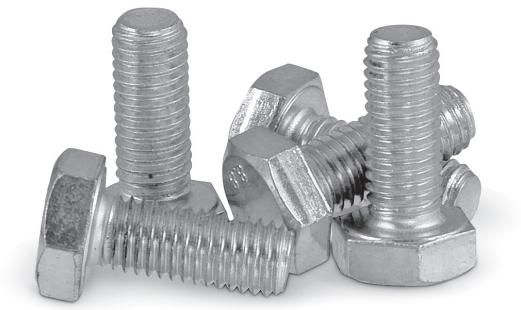

Description

SRS steel screws are universal construction and assembly fasteners also designed for fabrication and installation of ventilation components. The steel screws can be used with steel washers and nuts for bolting rectangular ducts flange frames at the corners. They are also used for fabricating air intake units, roof bases and exhaust units.

SRS-D steel screws feature a thread suitable for plastic wall plugs and wood. These screws are most often used for installation of wall-mounted cantilever support arms, base feet and other channel strut accessories to walls, floors and ceilings. Steel screws form part of a system of installation accessories for HVAC systems and structural components.

Available materials — Product code example
SRS-... — galvanized steel sheet

Product code example
Product code: **SRS - M8**

type
diameter

Dimensions

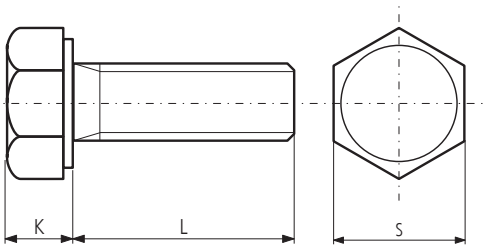

Product code	Size	L (mm)	K (mm)	S (mm)	Weight (kg/100)
SRS-M6	M	25	5	10	0.66
SRS-M8	M	25	5	13	1.39
SRS-M10	M	25	5	17	2.57
SRS-M12	M	25	5	19	3.66

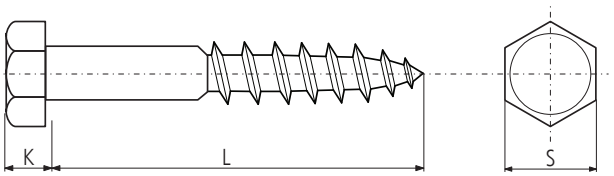

Product code	Size	L (mm)	K (mm)	S (mm)	Weight (kg/100)
SRS-D6-50	M6	50	4	10	0.95
SRS-D6-70	M6	70	4	10	1.26
SRS-D8-50	M8	50	5.5	13	1.77
SRS-D8-60	M8	60	5.5	13	2.04
SRS-D8-70	M8	70	5.5	13	2.31
SRS-D10-50	M10	50	7	17	2.97
SRS-D10-60	M10	60	7	17	3.41
SRS-D10-70	M10	70	7	17	3.82
SRS-D10-100	M10	100	7	17	5.16

ALNOR® ventilation systems
is a registered trademark protected by a technical patent. All modification rights reserved.

Steel stud bolt

SR2G

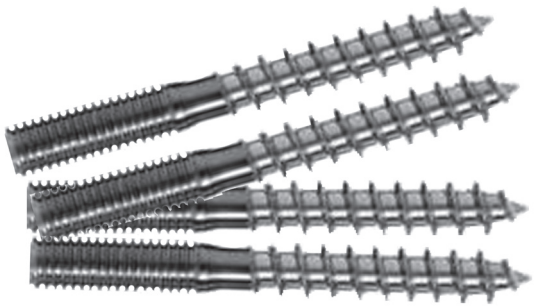

Dimensions

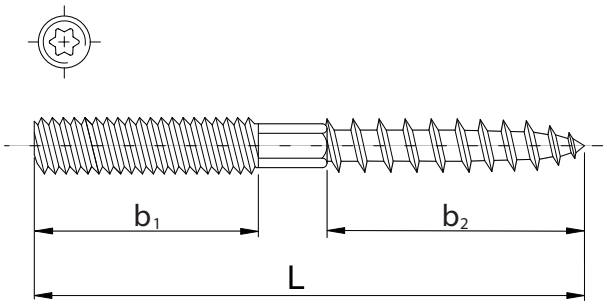

Product code	Ød (mm)	b_1 (mm)	b_2 (mm)	L (mm)
SR2G-M6-60	M6	25	35	60
SR2G-M6-90	M6	30	30	90
SR2G-M6-120	M6	30	30	120
SR2G-M8-60	M8	20	30	60
SR2G-M8-80	M8	27	40	80
SR2G-M8-100	M8	40	50	100
SR2G-M8-120	M8	50	50	120
SR2G-M10-80	M10	20	48	80
SR2G-M10-100	M10	30	57	100
SR2G-M10-120	M10	50	56	120
SR2G-M10-140	M10	40	50	140
SR2G-M12-100	M12	25	45	100
SR2G-M12-120	M12	35	60	120
SR2G-M12-140	M12	35	60	140

Description

SR2G stud dowel bolts feature a wood thread at one end. It is designed for bolting to walls and ceilings. There are hex flats between the two threads. The product is made from galvanized steel.

Available materials — Product code example
SR2G-...-... — galvanized steel sheet

Product code example
Product code: **SR2G-M8-100**

type

ALNOR® ventilation systems
is a registered trademark protected by a technical patent. All modification rights reserved.

SR2G stud bolt wall plugs

KROZ



Description

KROZ wall plugs are designed for all hardware fasteners attached to concrete and bricks in general construction and indoor finish. Once driven into a hole, a screw can be driven into the wall plug.

Product code example
Product code: **KROZ-M10-50**

type

Dimensions

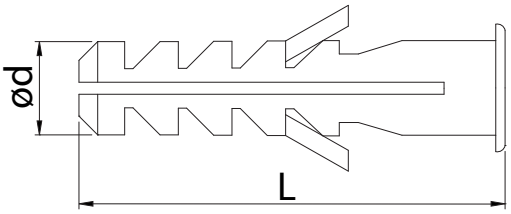

Product code	*Ød (mm)*	*L (mm)*	*Matching bolts (mm)*
KROZ-M8	8	40	SR2G-M6-60
KROZ-M8	8	40	SR2G-M6-80
KROZ-M8	8	40	SR2G-M6-100
KROZ-M10	10	50	SR2G-M8-60
KROZ-M10	10	50	SR2G-M8-80
KROZ-M10	10	50	SR2G-M8-100
KROZ-M10	10	50	SR2G-M8-120
KROZ-M12	12	60	SR2G-M10-80
KROZ-M12	12	60	SR2G-M10-100
KROZ-M12	12	60	SR2G-M10-120
KROZ-M12	12	60	SR2G-M10-150
KROZ-M14	14	70	SR2G-M12-100
KROZ-M14	14	70	SR2G-M12-120
KROZ-M14	14	70	SR2G-M12-150

ALNOR® ventilation systems
is a registered trademark protected by a technical patent. All modification rights reserved.

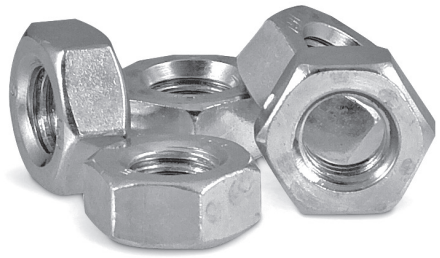

Description

Steel nuts are universal construction and assembly fasteners also designed for fabrication and installation of ventilation components. Steel nuts can be used with steel washers and screws for bolting square duct flange frames at the corners. They are also used for fabricating air intake units, roof bases and exhaust units. They are essential for fastening all types of joints, LDB channels, LDB Strut channels, and other suspension products, e.g. perforated tapes.

Available materials — Product code example
NKS-... — galvanized steel sheet

Product code example
Product code: **NKS - M8**

type
diameter

Dimensions

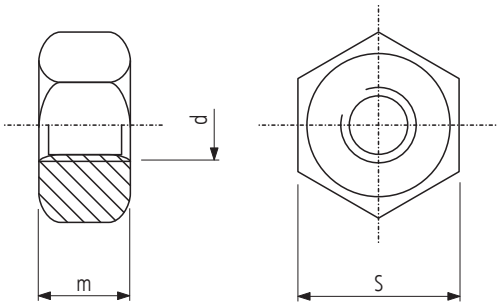

Product code	d (mm)	m (mm)	s (mm)	Weight (kg/100)
NKS-M6	6	5	10	0.25
NKS-M8	8	5	13	0.52
NKS-M10	10	5	17	1.16
NKS-M12	12	5	19	1.73

ALNOR® ventilation systems
is a registered trademark protected by a technical patent. All modification rights reserved.

Steel coupling nut for threaded rods

NZO

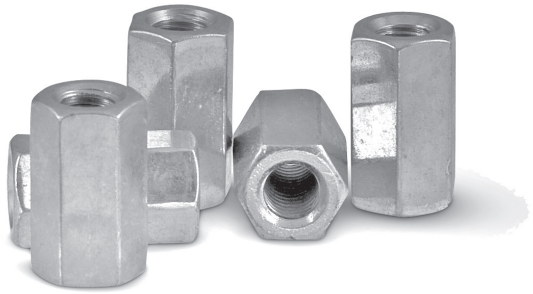

Description

NZO coupling nuts are used for joining the ends of two PG threaded rods together. Thread each PG end halfway into the coupling nut to achieve the full performance of this hardware type. The coupling nuts extend the threaded rods where the ceiling to ventilation duct clearance exceeds 3 m and threaded rods cannot be used in solid pieces.

Available materials — Product code example
NZO-... — galvanized steel sheet

Product code example
Product code: **NZS - M8**

type
diameter

Dimensions

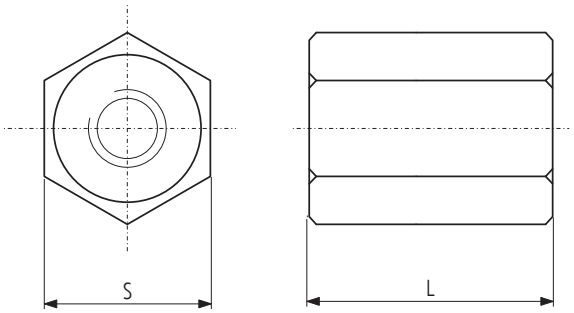

Product code	*Size*	*S (mm)*	*L (mm)*	*Weight (kg/100)*
NZO-M6	M	10	24	0.11
NZO-M8	M	13	24	0.21
NZO-M10	M	17	30	0.35
NZO-M12	M	19	40	0.58

ALNOR® ventilation systems
is a registered trademark protected by a technical patent. All modification rights reserved.

Steel washers for bolts and nuts
PDS

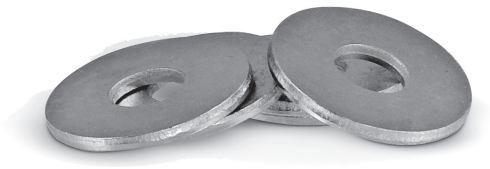

Description

Steel washers are universal construction and assembly fasteners also designed for fabrication and installation of ventilation components. PDS-P wide washers can be used with steel washers and nuts for bolting square duct flange frames at the corners. They are also used for fabricating air intake units, roof bases and exhaust units. They are essential for connecting LDB fixing rail and STRUT channel.

Available materials — Product code example
PDS-... — galvanized steel sheet

Product code example
Product code: **PDS - 8**

type
diameter

Dimensions

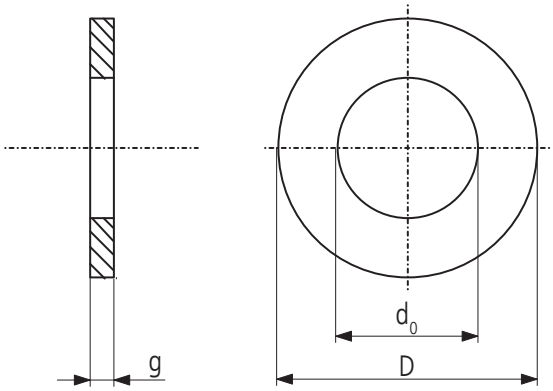

Standard PDS washers, DIN 125 sizes

Product code	*Ød$_0$ (mm)*	*ØD (mm)*	*g (mm)*	*Weight (kg/100)*
PDS-6	6.4	12	1.6	0.10
PDS-8	8.4	16	1.6	0.18
PDS-10	10.5	20	2.0	0.37
PDS-12	13.0	24	2.5	0.50

Wide PDS-P washers, DIN 9021 sizes

Product code	*Ød$_0$ (mm)*	*ØD (mm)*	*g (mm)*	*Weight (kg/100)*
PDS-P-8	8.4	24	2.0	0.62
PDS-P-10	10.5	30	2.5	1.22
PDS-P-12	13.0	37	3.0	2.22

Corrugated PDS-K washers, DIN 6798 sizes

Product code	*Ød$_0$ (mm)*	*ØD (mm)*	*g (mm)*	*Weight (kg/100)*
PDS-K-8	8.4	15	0.7	0.07
PDS-K-10	10.5	18	0.9	0.12
PDS-K-12	13.0	20	1.0	0.14

ALNOR® ventilation systems
is a registered trademark protected by a technical patent. All modification rights reserved.

G-clamps for rectangular duct flange frames

KLQ



Description

KLQ G-clamps are designed for fastening rectangular ventilation ducts. It is versatile enough to allow mounting the PQ20, PQ30 and PQ40 flange frames on rectangular duct sides over 500 mm in length. The longer, optional 25 mm screw enables using KLQ G-clamps for fastening rectangular ventilation ducts to fire dampers and DSQW-A aluminium ventilation dampers.
The minimum set screw length is 17 mm.

Available materials — Product code example

KLQ-20	— galvanized steel sheet
KLQ-K-20	— 1.4301/304 stainless steel sheet
KLQ-K-20-316L	— 1.4404/316L stainless steel sheet, molybdenum-enriched

Product code example

Product code: **KLQ-20**

type

Dimensions

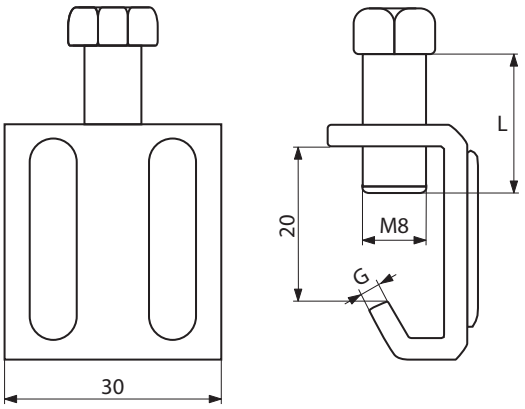

Product code	*Set screw (mm)*	*L (mm)*	*G (mm)*
KLQ-20	M8	25	3.0
KLQ-20-2,5	M8	20	2.5

Fastening method

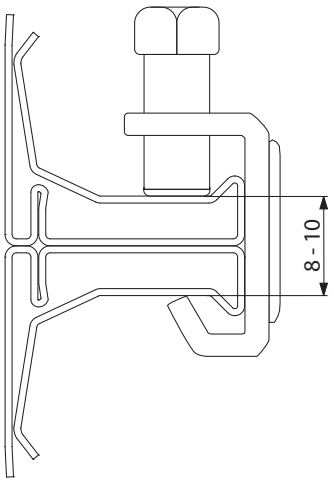

ALNOR® ventilation systems
is a registered trademark protected by a technical patent. All modification rights reserved.

Slide channel for fastening rectangular duct flange frames

PWQ

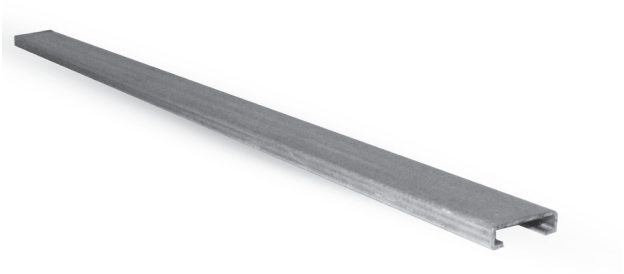

Dimensions

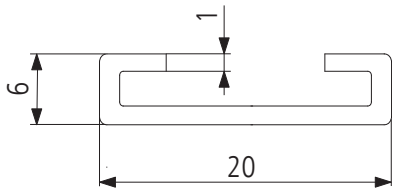

Description

PWQ slide channels can be used for fastening rectangular ducts together. A slide channel of a desired length is slid over PQ-20 or PQ-30 flange frame angle sections which are connected with each other. The slide channel is most often used when the ducts have to be completely mated along their entire flange frame length and when the clearance over a ducts is too small to access and tighten KLQ clamps.

Available materials — Product code example
PWQ-... — galvanized steel sheet

Product code example
Product code: **PWQ**

type

ALNOR® ventilation systems
is a registered trademark protected by a technical patent. All modification rights reserved.

Slide channel for fastening rectangular duct flange frames

PWQ-R



Dimensions

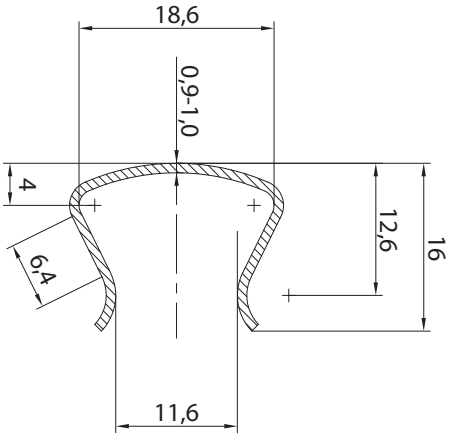

Description

PWQ-R slide channels can be used for fastening rectangular ducts together. A slide channel of a desired length is slid over PQ-20 or PQ-30 flange frame angle sections which are connected with each other. The slide channel is most often used when the ducts have to be completely mated along their entire flange frame length and when the clearance over a ducts is too small to access and tighten KLQ G-clamps. The upturned bottom edges help slide the channel over the PQ flange frames and drive them to stop from the sides.

Length of sections: 2.5 m and 5 m.

Available materials — Product code example
PWQ-R-... — galvanized steel sheet
PWQ-R-K-... — 1.4301/304 stainless steel sheet
PWQ-R-K-...-316L — 1.4404/316L stainless steel sheet

Product code example
Product code: **PWQ-R**

type _____

Installation method

1. Slide the channel over the duct.



2. Push the slide channel gently to stop.



3. Use a low-profile tool to access low-clearance areas.

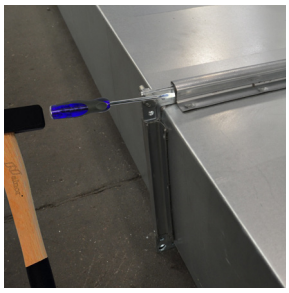

4. The mated surfaces are sealed and look neat.

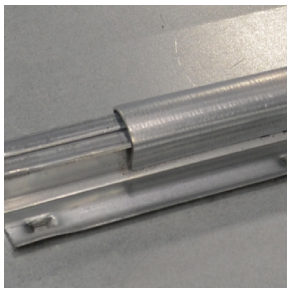

ALNOR® ventilation systems
is a registered trademark protected by a technical patent. All modification rights reserved.

Self-drilling screws for joining ventilation ducts

WGO

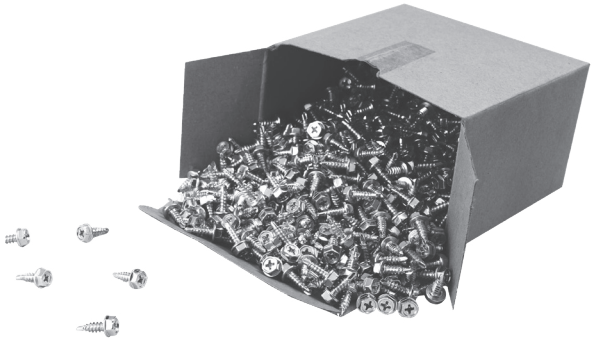

Description

WGO self-drilling screws are quick-to-drive fasteners for attaching L, Z and T type brackets to metal sheet. They can also be used
to fasten round ducts to round fittings. GWO screws are available with hex-flat heads and/or Philips or Allen key slots. The screws are galvanized. Driver bits are available for specific screw head forms and slots. See the driver bit codes below:

WGO-NK-KL - hex socket bit
WGO-NK-KZ - Philips slot bit
WGO-NK-IB - Allen slot bit

Available materials - Product code example
WGO...-...- galvanized steel sheet

Product code example
Product code: **WGO-13-KL**

type

Dimensions

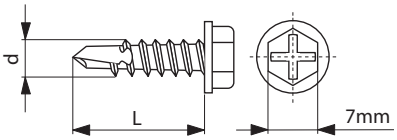

Product code	Ød (mm)	L (mm)	Head form
WGO-D-09	4.2	9	hex head & Philips head

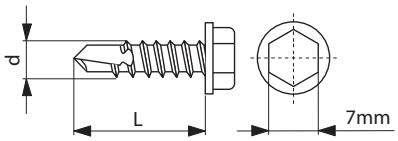

Product code	Ød (mm)	L (mm)	Head form
WGO-09-KL	4.2	9	hex head
WGO-13-KL	4.2	13	hex head
WGO-16-KL	4.2	16	hex head
WGO-19-KL	4.2	19	hex head
WGO-25-KL	4.2	25	hex head

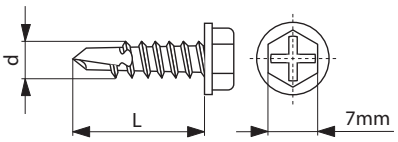

Product code	Ød (mm)	L (mm)	Head form
WGO-09-KZ	4.2	9	hex head & Philips head
WGO-13-KZ	4.2	13	hex head & Philips head
WGO-16-KZ	4.2	16	hex head & Philips head
WGO-19-KZ	4.2	19	hex head & Philips head
WGO-25-KZ	4.2	25	hex head & Philips head

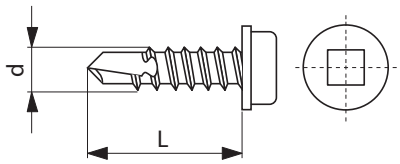

Product code	Ød (mm)	L (mm)	Head form
WGO-09-IB	4.2	9	Philips head
WGO-13-IB	4.2	13	Philips head
WGO-16-IB	4.2	16	Philips head
WGO-19-IB	4.2	19	Philips head
WGO-25-IB	4.2	25	Philips head
WGO-D-09-IB	4.2	9	Philips head

ALNOR® ventilation systems
is a registered trademark protected by a technical patent. All modification rights reserved.

WGO self-drilling screw bits

WGO-KL-NK/WGO-KZ-NK/WGO-IB-NK



Description

WGO -...- NK bits help quickly drive WGO self-drilling screws with power tools.
Available bit types:

WGO-KL-NK — hex socket bit
WGO-KZ-NK — Philips slot bit
WGO-IB-NK — Allen slot bit

Available materials — Product code example
WGO-...-NK — galvanized steel sheet

Product code example
Product code: **WG-KL-NK**

type

Dimensions

WGO-KL-NK

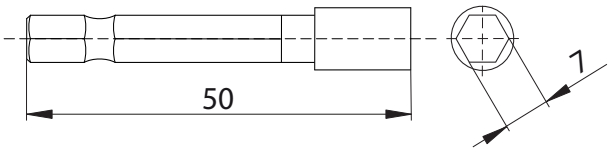

WGO-KZ-NK

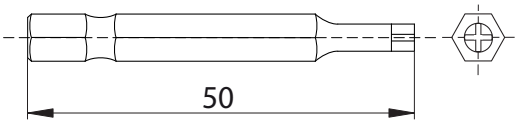

WGO-IB-NK

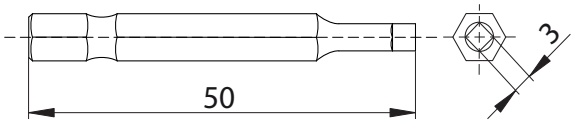

ALNOR® ventilation systems
is a registered trademark protected by a technical patent. All modification rights reserved.

Rivets

NIT-S/NIT-S-K

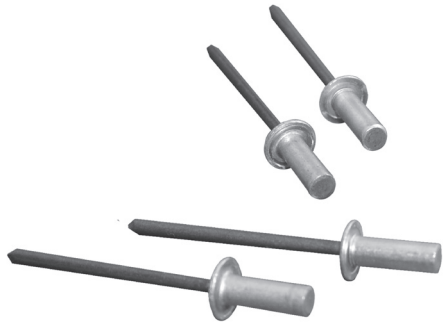

Description

NIT-S and NIT-S-K sealing rivets can fasten ventilation ductwork components whenever the fasteners must provide a high air tightness class. The rivets seal their penetrations and do not reduce the air tightness class. Available in packs of 1000 pcs.

NIT-S — aluminium and steel sealing rivet
NIT-S-K — stainless steel sealing rivet

Product code example
Product code: **NIT-S - 3,2 - 08**

type
diameter
length

Dimensions

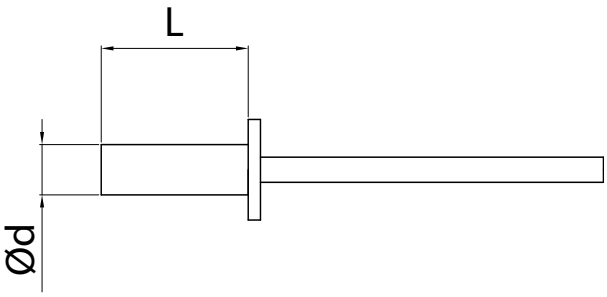

Ød (mm)	*Length L (mm)*	Examples of connections
3.2	8	Ducts / channels
4	8	Spiral components
4	10	Suspension hardware

ALNOR® ventilation systems
is a registered trademark protected by a technical patent. All modification rights reserved.

Flexible duct band clips
TKS



Dimensions

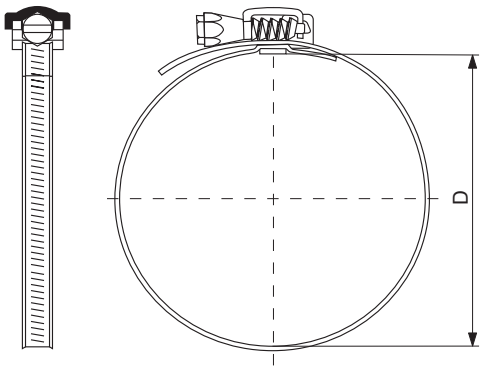

Product code	*Diameter range Ø* (mm)
TKS-90	50-90
TKS-110	50-110
TKS-135	50-135
TKS-165	50-165
TKS-215	50-215
TKS-270	50-270
TKS-315	50-315
TKS-325	50-325
TKS-380	50-380
TKS-525	50-525
TKS-660	50-660

Description

TKS band clips are made from galvanized steel sheet bands. TKS band clips are essential for joining flexible ventilation ducts and fittings, stub pipes, ports, etc. The hemmed band clip edges prevent damage to the ducts when installing or removing this product. They are tightened with a captive screw cleat for a fully airtight and strong connection.

Band width: 9 mm.
Packaging: 10 pcs / pack

Materials:
TKS — band: galvanized steel sheet
cleat — SUS201 stainless steel sheet
screw — SWCH1035 carbon steel

Product code example
Product code: **TKS**

type

ALNOR® ventilation systems
is a registered trademark protected by a technical patent. All modification rights reserved.

Flexible duct band clips

TKS-A



Dimensions

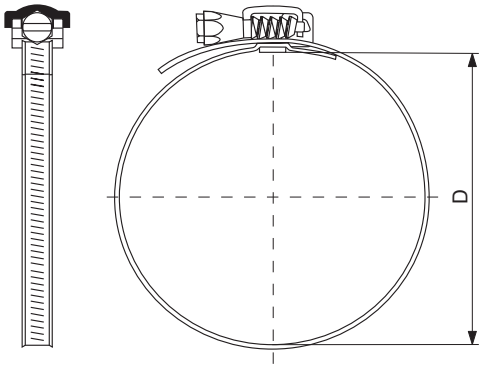

Product code	*Diameter range Ø* (mm)
TKS-A-90	50-90
TKS-A-110	50-110
TKS-A-135	50-135
TKS-A-165	50-165
TKS-A-215	50-215
TKS-A-270	50-270
TKS-A-315	50-315
TKS-A-325	50-325
TKS-A-380	50-380
TKS-A-525	50-525
TKS-A-660	50-660

Description

TKS-A band clips are made from stainless steel sheet bands. TKS-A band clips are essential for joining flexible ventilation ducts and fittings, stub pipes, ports, etc. The hemmed band clip edges prevent damage to the ducts when installing or removing this product. They are tightened with a captive screw cleat for a fully airtight and strong connection. The screw thread pattern along the entire band helps tighten TKS-A clips around small-diameter objects.

Band width: 9 mm.
Packaging: 10 pcs / pack

Materials
TKS-A — band - SUS430 stainless steel sheet
cleat — SUS201 stainless steel sheet
screw — SWCH1035 carbon steel

Product code example
Product code: **TKS-A**

type

ALNOR® ventilation systems
is a registered trademark protected by a technical patent. All modification rights reserved.

Nylon zip ties for flexible ducts and insulation cladding

TKS-N

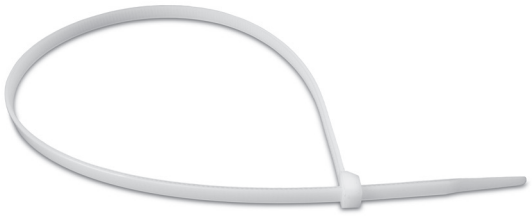

Description

TKS-N is a typical, full-nylon zip tie and an ideal alternative to metal band clips for a quick and very easy installation. The operating temperature range of TKS-N zip ties is -55˚C to +100˚C. They can fix flexible ducts and Alu Lamella Mats wrapped around round Spiral ducts.

Product code example
Product code: **TKS-N**

type

Dimensions

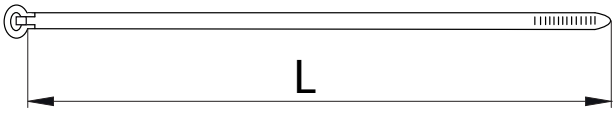

Product code	*Length L (mm)*	*Ø Max. diameter (mm)*
TKS-N-500	500	140
TKS-N-550	550	155
TKS-N-650	650	185
TKS-N-800	800	235
TKS-N-920	920	270
TKS-N-1180	1180	355

ALNOR® ventilation systems
is a registered trademark protected by a technical patent. All modification rights reserved.

Flexible duct band clips
TKSE/TKSL

TKSE



TKSL



Dimensions

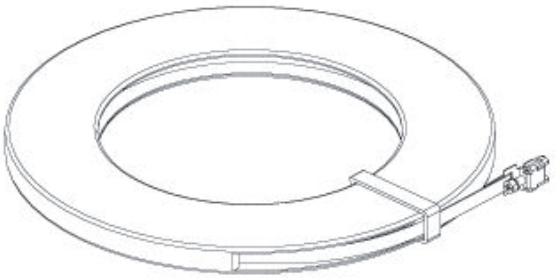

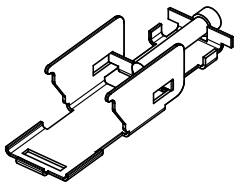

Description

TKSE band clips are essential for joining flexible ventilation ducts and fittings, stub pipes, ports, etc. The hemmed band clip edges prevent damage to the ducts when installing or removing this product. TKSE band clips are 9 mm in width and available in 30 m long reels. The entire band in a reel has a screw thread pattern, which helps trimming the product to any length. The reel box helps measure the trimmed band length to match the diameter to be fixed.
TKSE band clips need to be provided with TKSL screw cleats.

Packaging:
TKSE band — 30 m / reel
TKSL screw cleats — 50 pcs / box

Materials:
TKSE — band - galvanized steel sheet
TKSL — cleat — SUS201 stainless steel sheet
screw — SWCH1035 carbon steel

Product code example
Product code: **TKSE**

type

ALNOR® ventilation systems
is a registered trademark protected by a technical patent. All modification rights reserved.

Flexible duct band clips

TKSE-A/TKSL-A

TKSE-A

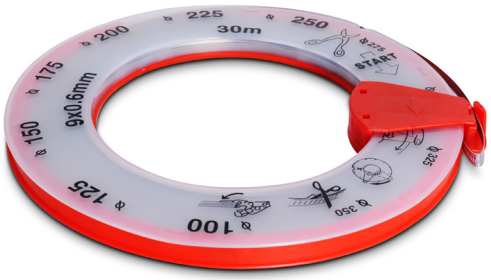

TKSL-A



Dimensions

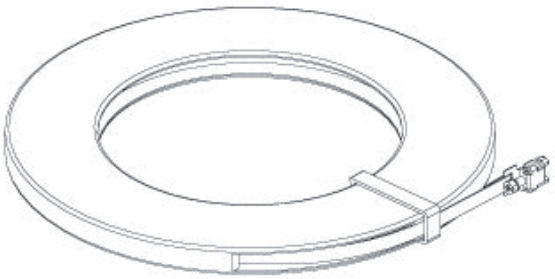

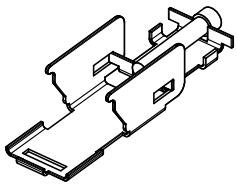

Description

TKSE-A band clips are essential for joining flexible ventilation ducts and fittings, stub pipes, ports, etc. The hemmed band clip edges prevent damage to the ducts when installing or removing this product. TKSE band clips are 9 mm in width and available in 30 m long reels. The entire band in a reel has a screw thread pattern, which helps trimming the product to any length. The reel box helps measure the trimmed band length to match the diameter to be fixed. TKSE-A band clips need to be provided with TKSL-A screw cleats.

Packaging:
TKSE-A band — 30 m / reel
TKSL-A screw cleats — 50 pcs / box

Materials:
TKSE-A — band: SUS430 stainless steel sheet
TKSL-A — cleat — SUS201 stainless steel sheet
screw — SWCH1035 carbon steel

Product code example
Product code: **TKSE-A**

type

ALNOR® ventilation systems
is a registered trademark protected by a technical patent. All modification rights reserved.

Sealing clamp
MSFK



Description

MSFK sealing clamps are used for connecting ventilation ductwork components, like duct fans, which need to be removable without having to disassemble a large portion of the system. They can also provide an enhanced seal at ductwork joints. Standard sealing clamps are lined with polyurethane foam on the inside. An optional sealing clamp version is available with an EPDM liner, see product code: MSFK-L-...

Product code example

Product code: **MSFK - aaa**

type

ØD

Dimensions

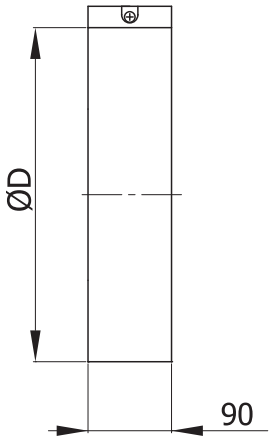

$ØD_{nom}$ (mm)	Weight (kg)
80	0.3
100	0.3
125	0.4
140	0.4
150	0.5
160	0.5
180	0.5
200	0.5
224	0.6
250	0.6
300	0.6
315	0.7
350	0.7
400	0.8
450	1.1
500	1.2

ALNOR® ventilation systems
is a registered trademark protected by a technical patent. All modification rights reserved.

Duct fan fastening clamp

MSFK-C

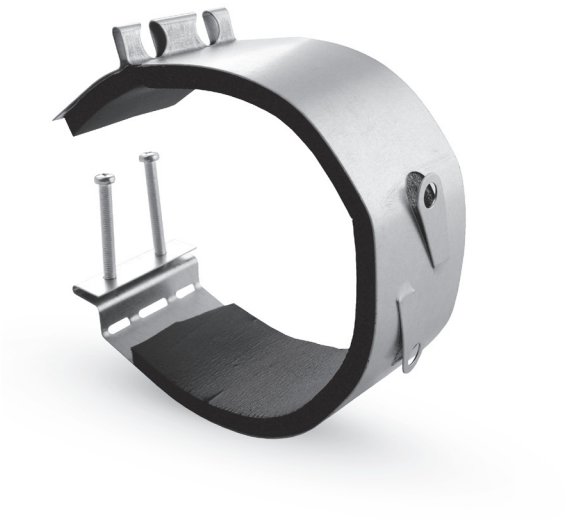

Description

MSFK-C fastening clamps are mostly used for installation of round duct fans. The clamps are lined with polyurethane foam on the inside. First, the clamp is slid over the end of a SPIRAL duct; the duct fan port is aligned with the Spiral duct, leaving a small gap between the two parts. Finally, the fastening clamp is slid over the duct fan port and tightened. Once tightened, the fastening clamp provides an airtight and fast connection; if the duct fan fails or requires off-site servicing, the fastening clamp can be easily removed to enable disassembly.



The fastening clamps are delivered flat and need to be bent to the duct diameter.

Product code example

Product code: **MSFK-C - aaa**

type

ØD

Installation method

1. Slide the clamp onto the duct and suspend it.



2. Make the other joint with the duct fan in the same way..



Dimensions

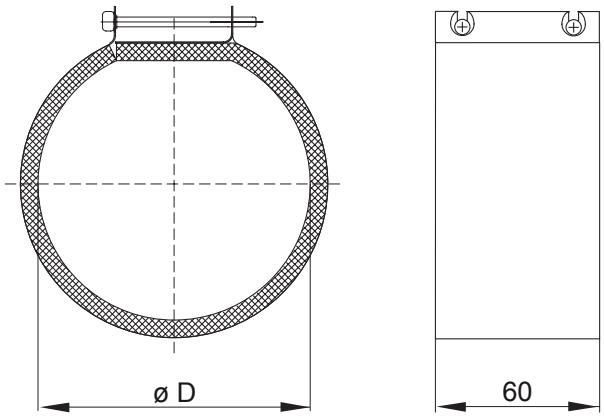

$ØD_{nom}$ (mm)	Weight (kg)
80	0.2
100	0.2
125	0.2
140	0.2
150	0.3
160	0.3
200	0.3
250	0.4
315	0.5

ALNOR® ventilation systems
is a registered trademark protected by a technical patent. All modification rights reserved.

Roof installation accessories

ALNOR reserves the right to modify product specifications in line with our policy of continuous product improvement.

ALNOR® ventilation systems
is a legally protected trademark and technical patent. All rights reserved.

System description

Roof installation accessories are a range of fixtures and tools for easy and safe suspension of round and square ventilation ducts.
Roof installation accessories are a range of modular roof support kits and roof feet, as well as other accessories that make the assembly easy and fast. Sets of roof supports can be used on flat roofs and slightly sloped roof.
Roof support kit consist of perfectly matched elements - roof feet, sections of channel, screws, nuts, etc. The standoff design enables free circulation of air around the ducts. The ducts are kept above the water drained from the roof surface, and in winter, snow can be easily removed from below the ducts.
All types of roof flashings used for sealing around penetrations through buildings are made of EPDM rubber with high resistance to high temperature, stretching and UV radiation. It easily adjusts to pipes and outlets of different diameters.
Anti-vibration mats are placed under roof feet and supports to effectively deaden vibrations and noise generated by roof-installed equipment. They also protect the roof membrane from mechanical damage.

Dimensions

All sizes are shown in the tables and specifications in the individual Product Data Sheets.

Installation instructions

All components are specifically designed for a specific type of ventilation ducts. The individual suspension components can be combined into an installation system for the ductwork.

Application advantages

All components are dimensioned to the specific size, weight and features of ventilation ducts. Installation accessories enable quick and easy installation using various methods of ductwork suspension according to the actual site conditions.

Marking

ALNOR products carry the Polish conformity mark B for construction products and product codes as shown in the technical specifications listed in this catalogue.

ALNOR® ventilation systems
is a legally protected trademark and technical patent. All rights reserved.

Roof duct supports

FAA/FAAL/FAAT

FAA



FAAT



FAAL



Description

he FAA... roof duct supports are designed for installation of round ventilation ducts on flat surfaces, e.g. on the roof. The standoff design enables free circulation of air around the ducts. The ducts are kept above the water drained from the roof surface, and in winter, snow can be easily removed from below the ducts. If the roof ductwork is exposed to strong winds, latched models are recommended to prevent the ducts from being pulled out of the support bands. All types of roof duct supports are mounted to the roof with two screws passing through the holes in the lower section of the base.

Standard height: 75 mm. Available on request: 120 mm.

Mounting hole diameter:

Ø80-400 mm - Ø4 mm

Ø450-800 mm - Ø8,5 mm.

Available materials - Product code examples

FAA-...	- galvanized steel sheet
FAA-K-...	- 1.4301/304 stainless steel sheet
FAA-K-...- 316L	- 1.4404/316L stainless steel sheet, molybdenum-containing
FAA-A-...	- AW-1050A H24 aluminium shee
FAA-CU-...	- M1E z4 copper sheet

Product code examples

Product code: **FAA - 160 - 75 - 4**

type

Ød

height

Ø hole

ALNOR® ventilation systems
is a legally protected trademark and technical patent. All rights reserved.

FAA/FAAL/FAAT

Dimensions

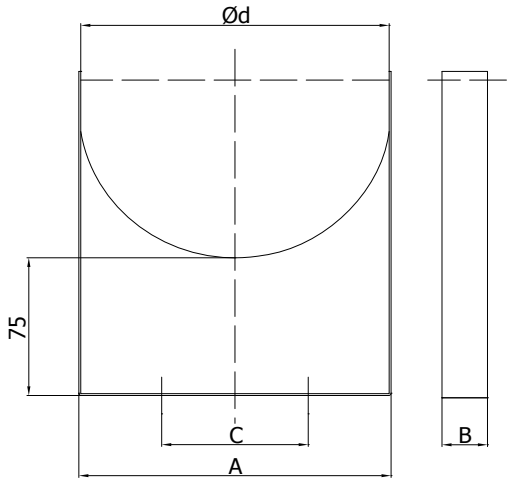

Ød [mm]	A [mm]	B [mm]	C [mm]	number of holes
80	83	25	-	1
100	103	25	33	2
125	128	25	58	2
150	153	25	83	2
160	163	25	93	2
200	203	25	133	2
250	253	25	183	2
315	318	25	248	2
400	403	25	333	2
500	503	25	433	2
630	633	30	563	2

ALNOR® ventilation systems
is a legally protected trademark and technical patent. All rights reserved.

Roof flashing for ventilation duct

PD-EPDM-R



Description

The PD-EPDM-R roof flashing provides a circumferential seal around the ducts outside the building. The pipe flashing is made of EPDM with good resistance to high temperatures, tensile stress and UV radiation. It can be easily fitted into ducts and outlets with various diameters. The outer part of the pipe flashing base is edged with aluminium to facilitate manual fitting the pipe flashing to the roof profile.

Ozone resistance: 70 hours at 500 parts per 100 million
Temperature resistance: -55°C to +135°C (transient)
-55°C to +100°C (continuous)
Maximum tensile strength: 10MPa

Product code examples
Product code: **PD-EPDM-R - aaa**

type
Ød$_1$

Dimensions

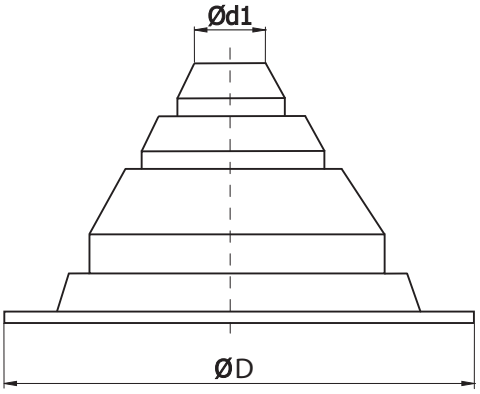

Code	Ød$_1$ [mm]	AxA [mm]
PD-EPDM-R-080-150	80-150	235
PD-EPDM-R-130-224	130-224	317
PD-EPDM-R-250-450	250-450	461

ALNOR® ventilation systems
is a legally protected trademark and technical patent. All rights reserved.

Roof flashing for roof penetrations

PD-EPDM-S



Description

The PD-EPDM-S roof flashing provides a circumferential seal around the ducts outside the building. The pipe flashing is made of EPDM with good resistance to high temperatures, tensile stress and UV radiation. It can be easily fitted into ducts and outlets with various diameters. The outer part of the flashing base is lined with aluminium to facilitate manual fitting the sealing sleeve to the roof profile.

Ozone resistance: 70 hours at 500 parts per 100 million
Temperature resistance: -55°C to +135°C (transient)
-55°C to +100°C (continuous)
Maximum tensile strength: 10MPa

Product code examples

Product code **PD-EPDM-S - aaa**

type
Ød$_1$

Dimensions

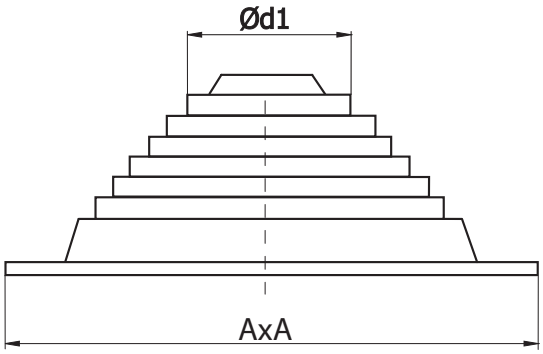

Code	Ød$_1$ [mm]	AxA [mm]
PD-EPDM-S-080-160	80-160	280
PD-EPDM-S-140-280	140-280	356
PD-EPDM-S-250-500	250-500	635
PD-EPDM-S-315-710	315-700	864

ALNOR® ventilation systems
is a legally protected trademark and technical patent. All rights reserved.

Roof flashing for roof penetrations

PD-EPDM-SO



Description

The PD-EPDM-SO roof flashing provides a circumferential seal around the ducts outside the building. The pipe flashing is made of EPDM with good resistance to high temperatures, tensile stress and UV radiation. It can be easily fitted into ducts and outlets with various diameters. The outer part of the pipe flashing base is edged with aluminium to facilitate manual fitting the flashing to the roof profile. Each PD-EPDM-SO roof sealing sleeve is available with plastic clips and a zip tie.

Ozone resistance: 70 hours at 500 parts per 100 million
Temperature resistance: -55°C to +135°C (transient)
-55°C to +100°C (continuous)
Maximum tensile strength: 10MPa

Product code examples
Product code: **PD-EPDM-SO - aaa**

type
Ød$_1$

Dimensions-

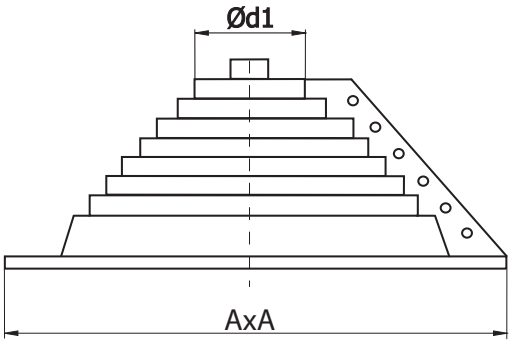

Code	Ød$_1$ [mm]	AxA [mm]
PD-EPDM-SO-112-224	112-224	362
PD-EPDM-SO-250-400	250-400	546

ALNOR® ventilation systems
is a legally protected trademark and technical patent. All rights reserved.

Mounting roof feet
ST-ROF-330/ST-ROF-AW-330



Description

The ST-ROF and ST-ROF-AW roof feet are supports for various types of roof-mounted units, including condensers, AHUs, A/C outdoor units, or solar panels. This product can be combined with LDBST 41-41 strut channel to provide frames and racks for ventilation ductwork installation, as well as bridges, ladders, duct and line passageways on rooftops. The 2 integrated water levels help the fitters to precisely level out the roof foot. Each roof foot is made of a humidity- and UV-resistant plastic.

ST-ROF - roof foot without legs and vibration-damping mats (ST-ROF-MAT mat can be ordered separately).

ST-ROF-AW - a roof foot with vibration-damping legs, max. 10° pitch adjustment.



Absorbing adjustable legs for roof feet

Material: glass fiber-reinforced polypropylene (PP)

Max. load: 2200N

Product code examples

Product code: **ST-ROF - 330**

type

AxA

Dimensions

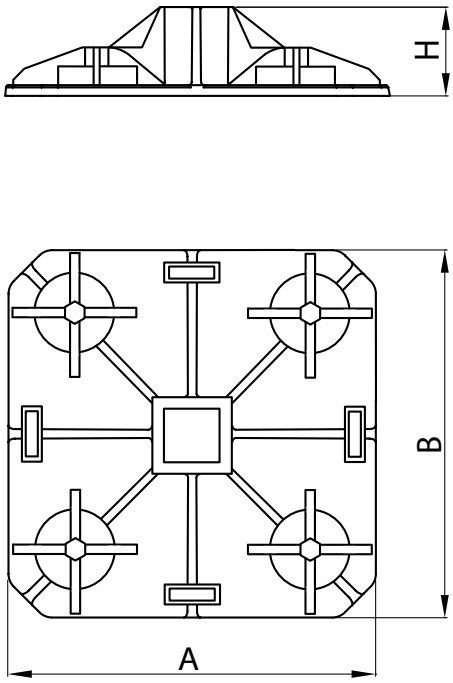

Code	A [mm]	B [mm]	H [mm]	Weight [kg]
ST-ROF-330	300	300	75	1,17
ST-ROF-AW-330	300	300	75	1,55

ALNOR® ventilation systems
is a legally protected trademark and technical patent. All rights reserved.

HVAC roof feet

ST-ROF-AWL



Description

The ST-ROF-AWL roof feet are heavy-duty supports for installation of large HVAC units on the roof. The roof foot is designed so as to ensure distribution of the HVAC unit's weight over a relatively large area of the roof, thus removing the risk of breaking the roof and the ceiling structure. The rubber-based material helps to eliminate vibrations generated by the HVAC unit. The HVAC unit is fastened to the roof foot with an LDBST channel strut.

Foot length: 250 / 450 / 600 / 1000 mm
Material: SBR (water-resistant)
Max. load: 1400N
Temperature resistance: -40°C to +80°C

Product code examples
Product code: **ST-ROF-AWL - aaa**

typE
L

Dimensions

ST-ROF-AWL-250, ST-ROF-AWL-450

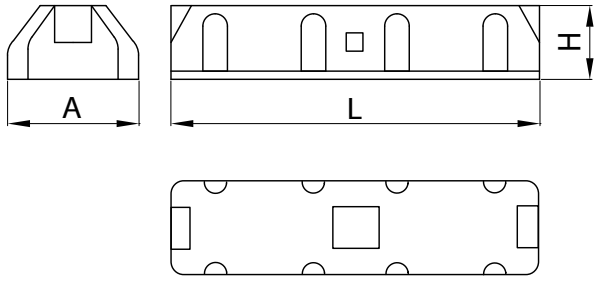

ST-ROF-AWL-600, ST-ROF-AWL-1000

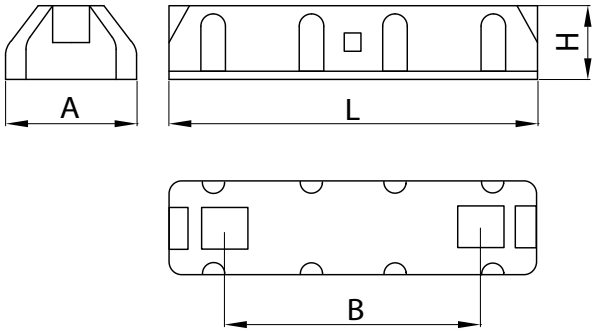

Code	A [mm]	B [mm]	L [mm]	H [mm	Weight [kg]
ST-ROF-250	160	-	250	90	0,48
ST-ROF-AW-450	160	-	450	90	1,75
ST-ROF-AW-600	160	470	600	90	3,10
ST-ROF-AW-1000	160	755	1000	90	10,2

ALNOR® ventilation systems
is a legally protected trademark and technical patent. All rights reserved.

Mounting roof foot

ST-ROF-AWL-STR



Description

The ST-ROF-AWL-STR roof strip feet are designed to support light-weight roof equipment, e.g. home split A/C units, pipe bundles, ductwork, or cables.
The ST-ROF-AWL-STR strip feet are available in four length sizes. Each ST-ROF-AWL-STR features a 41x41 mm aluminium channel embedded at the top and along the entire SBR body.



The roof strip feet are attached to the supported equipment with SNP unistrut channel nuts and large 40 mm washers. See details on p. 65.

Foot length 250 / 450 / 600 / 1000 mm
Material: SBR (water-resistant)
Max. load: 1400N
Temperature resistance: -40°C to +80°C

Product code examples
Product code: **ST-ROF-AWL-STR - 450**

type
L

Dimensions

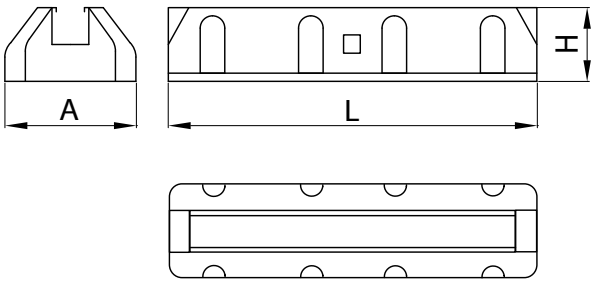

Code	A [mm]	B [mm]	H [mm]	Weight [kg]
ST-ROF-AWL-STR-250	160	250	90	0.48
ST-ROF-AWL-STR-450	160	450	90	1.75
ST-ROF-AWL-STR-600	160	600	90	3.1
ST-ROF-AWL-STR-1000	160	1000	90	10.2

ALNOR® ventilation systems
is a legally protected trademark and technical patent. All rights reserved.

Mounting roof foot

ST-ROF-AWL-STR

Technical specifications

The information in the table shows the narural frequencies and roof foot insulation at exemplary equipment's loads . The purpose of the feet is to isolate the vibration source from the structure of the device. For optimal foot selection it is important to determine the required degree of insulation (expressed in %). It is important to remember that not all situations require maximum vibration damping.

Load [kg]	*Natural frequency [Hz]*	*Insulation [%]*
25	52,0	56.8
50	36,7	80.7
75	30,2	87.1
100	26,2	90.2
125	23,3	92.2

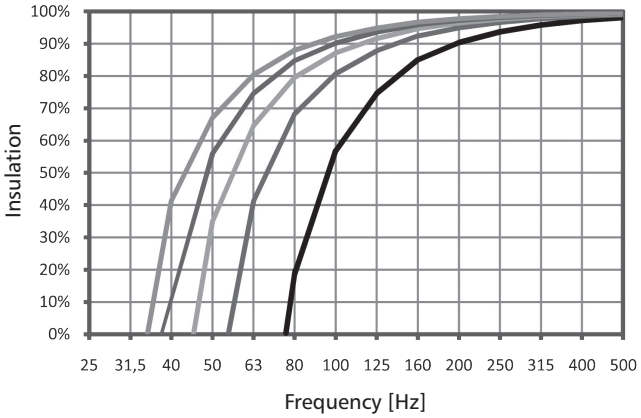

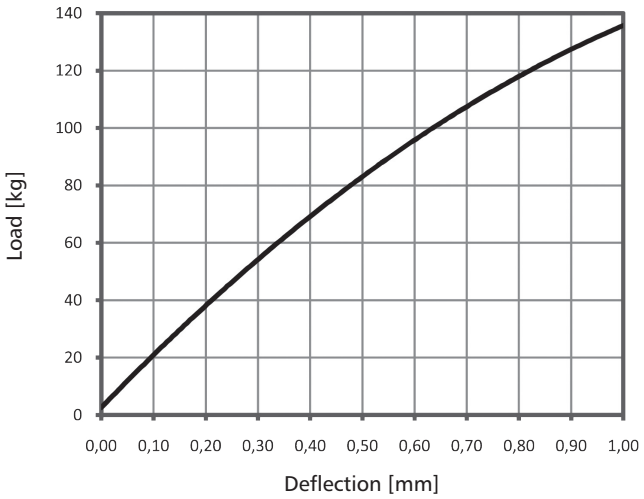

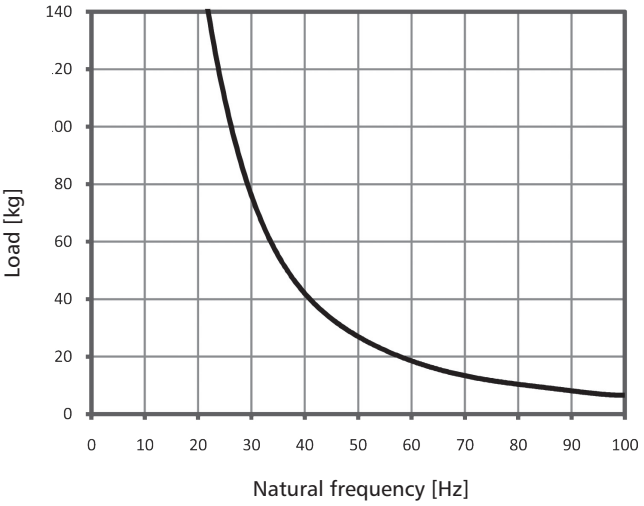

ALNOR® ventilation systems
is a legally protected trademark and technical patent. All rights reserved.

Unistrut channel slide nut

SNP-0806-SR-NK/SNP-1008-SR-NK

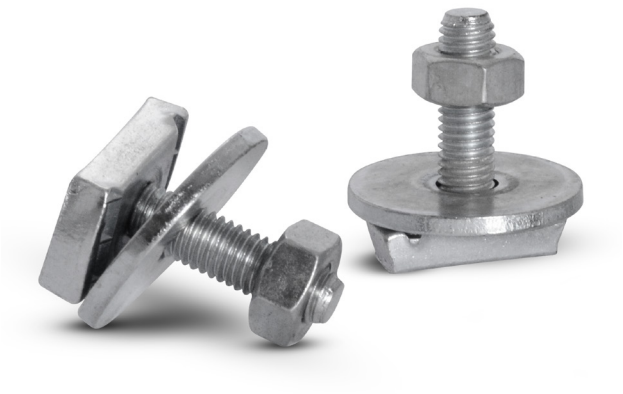

Description

The SNP unistrut channel nuts with large 40 mm washers are designed for fastening suspension rings to LDBST channel struts or for installation in roof feet units for mounting e.g. split A/C outdoor units

Available materials — Product code example
SNP-... - galvanized steel sheet

Product code examples
Product code: **SNP-0806-SR-NK**

type

Dimensions

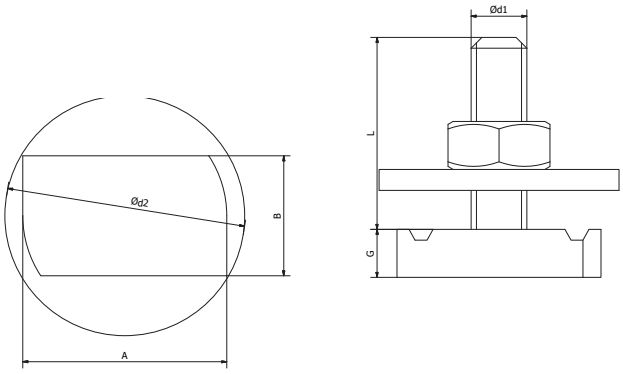

Code	Bolt [mm]	$Ød_2$ [mm]	$Ød_1$ [mm]	A [mm]	B [mm]	G [mm]	L [mm]
SNP-0806-SR-NK	M8	40	8	20	34	6	36
SNP-1008-SR-NK	M10	40	10	20	34	8	34

Code	Tightening torque [Nm]
SNP-0806-SR-NK	20.6
SNP-1008-SR-NK	35.7

Installation method



ALNOR® ventilation systems
is a legally protected trademark and technical patent. All rights reserved.

Vibration-damping mat for roof supports and feet

ST-ROF-MAT

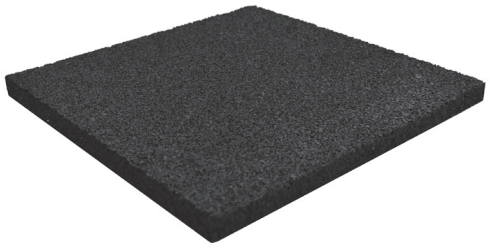

Description

ST-ROF-MAT mats are placed under roof feet and supports to effectively deaden vibrations and noise generated by roof-installed equipment. They also protect the roofing from mechanical damage.

Material: SBR (water-resistant)
Density 500kg/m³

Product code examples
Product code: **ST-ROF-MAT - 2 - 50**

type
thickness
dimension

Dimensions

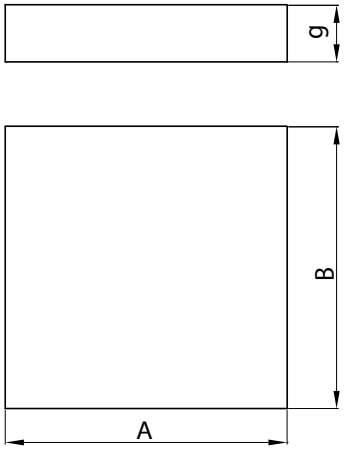

Code	A [mm]	B [mm]	g [mm]
ST-ROF-MAT-1-33	330	330	10
ST-ROF-MAT-1-50	500	500	10
ST-ROF-MAT-1-100	1000	1000	10
ST-ROF-MAT-2-50	500	500	20
ST-ROF-MAT-2-100	1000	1000	20

ALNOR® ventilation systems
is a legally protected trademark and technical patent. All rights reserved.

H-frame roof support kit

ST-ROF-SET-H



Description

ST-ROF-SET-H roof support is a set of feet, consoles and frames for installation of ventilation ducts and all types of equipment on the roofs of buildings. This product is quick and easy to install. The maximum continuous load is 150 kg.

Product code examples

Product code: **ST-ROF-SET-H**

type

Dimensions

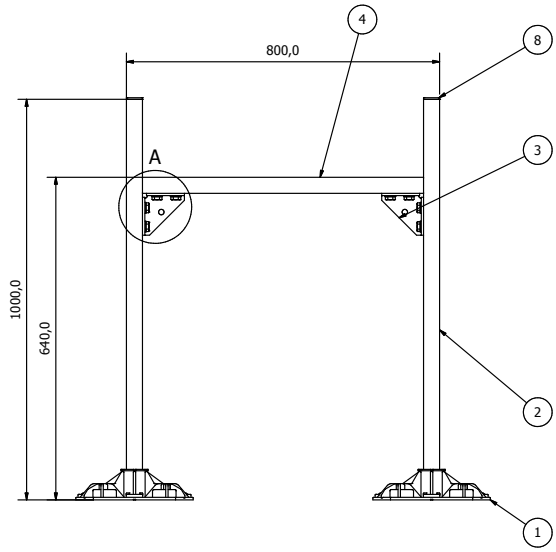

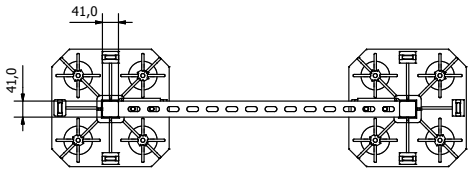

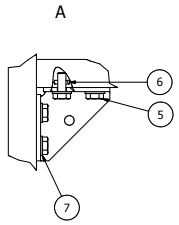

Components of the roof support:

Part no	*Qty [pcs]*	*Code*	*Description*
1	2	ST-ROF-330	Roof foot
2	2	LDBSG-41-41-200-0100	Channel strut
3	2	LDB-PBTR-41-5	Channel angle bracket
4	1	LDBSG-41-41-200-0071	Channel strut
5	8	SRS-M10-35	Screw
6	8	SNL-1008	Slide nut
7	8	PDS-P-10-100	Steel washer
8	2	Z-LDB-41-ST	Channel end cap

Optional accessories:
ST-ROF-AF - vibration-damping feet with adjustable pitch
ST-ROF-MAT - vibration-damping mat

ALNOR® ventilation systems
is a legally protected trademark and technical patent. All rights reserved.

Modular frameworks - roof support

ST-ROF-SET-4



Description

ST-ROF-SET-4 roof support is a set of feet, consoles and frames for installation of ventilation ducts and all types of equipment on the roofs of buildings. The number of possible configurations is virtually limitless. This product is quick and easy to install. This roof support is designed for mounting refrigerating units and other A/C equipment.
The maximum continuous load is 480 kg.

Product code examples
Product code: **ST-ROF-SET-4**

type _____

Dimensions

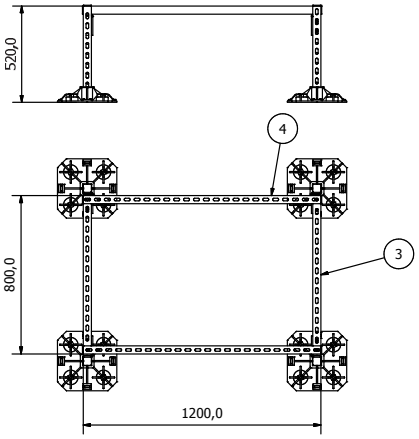

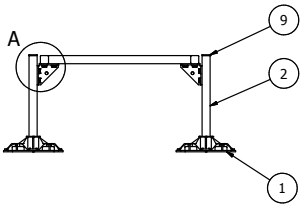

A (1 : 3)

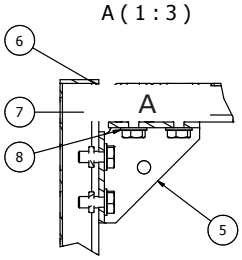

Components of the roof support:

Part no	*Qty [pcs]*	*Code*	*Description*
1	4	ST-ROF-330	Roof foot
2	2	LDBSG-41-41-200-0050	Channel strut
3	2	LDBSG-41-41-200-0071	Channel strut
4	2	LDBSG-41-41-200-0120	Channel strut
5	4	LDB-PBTR-41-5	Channel angle bracket
6	16	SRS-M10-35	Screw
7	16	SNL-1008	Slide nut
8	16	PDS-P-10-100	Steel washer
9	8	Z-LDB-41-ST	Channel end cap

Optional accessories:
ST-ROF-AF - vibration-damping feet with adjustable pitch
ST-ROF-MAT - vibration-damping mat

ALNOR® ventilation systems
is a legally protected trademark and technical patent. All rights reserved.

Modular frameworks - roof support

ST-ROF-SET-6



Description

ST-ROF-SET-6 roof support is a set of feet, consoles and frames for installation of ventilation ducts and all types of equipment on the roofs of buildings. The number of possible configurations is virtually limitless. This product is quick and easy to install. It is often used as a carrier frame for roof-installed HVAC units. The maximum continuous load is 720 kg

Product code examples
Product code: **ST-ROF-SET-6**

type

Dimensions

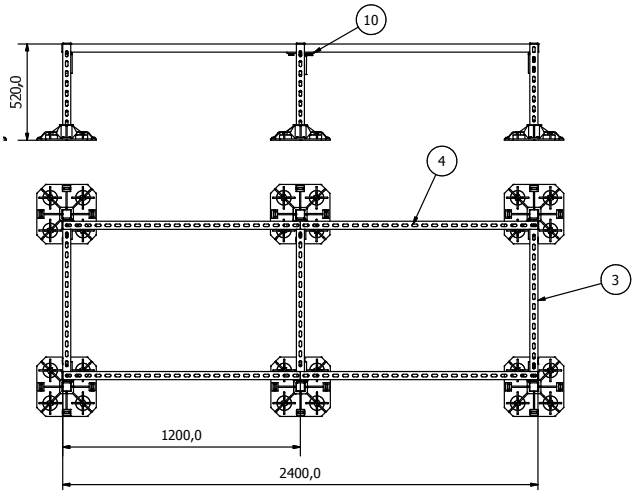

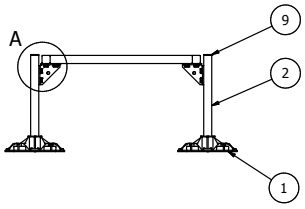

A (1 : 3)

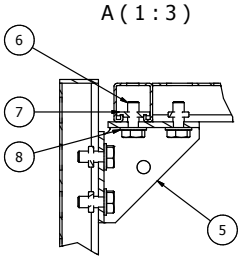

Components of the roof support:

Part no	*Qty [pcs]*	*Code*	*Description*
1	6	ST-ROF-330	Roof foot
2	6	LDBSG-41-41-200-0050	Channel strut
3	3	LDBSG-41-41-200-0071	Channel strut
4	4	LDBSG-41-41-200-0120	Channel strut
5	6	LDB-PBTR-41-5	Channel angle bracket
6	28	SRS-M10-35	Screw
7	28	SNL-1008	Slide nut
8	28	PDS-P-10-100	Steel washer
9	10	Z-LDB-41-ST	Channel end cap
10	2	LDB-PT-41-4	Flat bracket

Optional accessories:
ST-ROF-AF - vibration-damping feet with adjustable pitch
ST-ROF-MAT - vibration-damping mat

ALNOR® ventilation systems
is a legally protected trademark and technical patent. All rights reserved.

Modular frameworks - roof support

ST-ROF-SET-8



Description

ST-ROF-SET-8 roof support is a set of feet, consoles and frames for installation of ventilation ducts and all types of equipment on the roofs of buildings. The number of possible configurations is virtually limitless. This product is quick and easy to install. It is often used as a carrier frame for roof-installed HVAC units. The maximum continuous load is 950 kg.

Product code examples
Product code: **ST-ROF-SET-8**

type

Dimensions

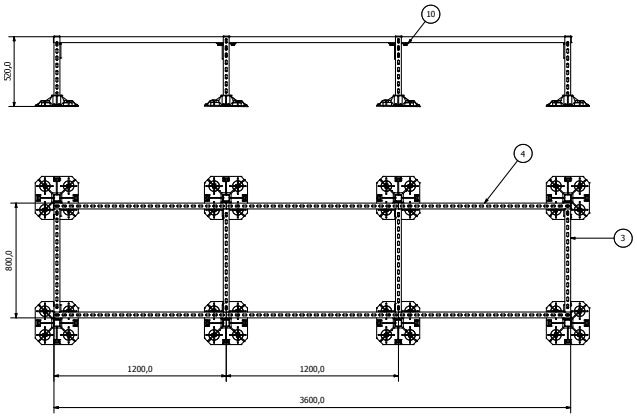

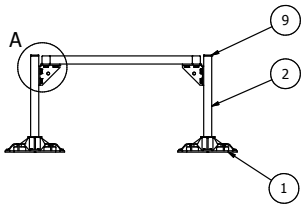

A (1 : 3)

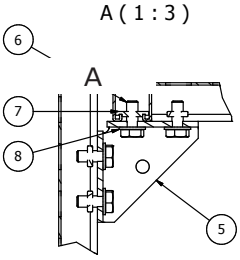

Components of the roof support:

Part no	*Qty [pcs]*	*Code*	*Description*
1	8	ST-ROF-330	Roof foot
2	8	LDBSG-41-41-200-0050	Channel strut
3	4	LDBSG-41-41-200-0071	Channel strut
4	6	LDBSG-41-41-200-0120	Channel strut
5	8	LDB-PBTR-41-5	Channel angle bracket
6	40	SRS-M10-35	Screw
7	40	SNL-1008	Slide nut
8	40	PDS-P-10-100	Steel washer
9	12	Z-LDB-41-ST	Channel end cap
10	4	LDB-PT-41-4	Flat bracket

Optional accessories:
ST-ROF-AF - vibration-damping feet with adjustable pitch
ST-ROF-MAT - vibration-damping mat

ALNOR® ventilation systems
is a legally protected trademark and technical patent. All rights reserved.

Ventilation duct prefabricated components

ALNOR reserves the right to modify technical specifications in line with the policy of continuous product improvement.

ALNOR® ventilation systems
is a registered trademark protected by a technical patent. All modification rights reserved.

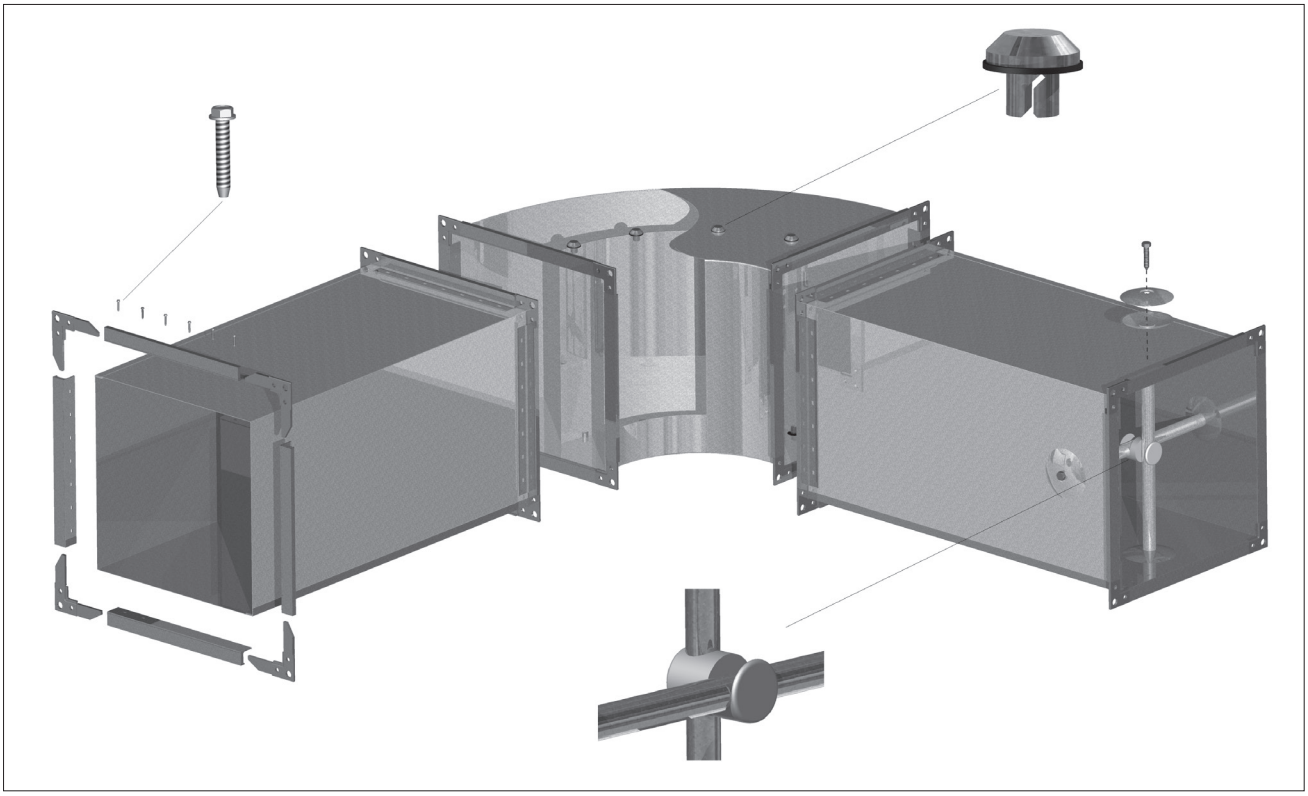

System description

Prefabricated components help to quickly and easily build and modify ventilation ducts. All system parts have been designed according to the HVAC industry standards followed by most manufacturers.

Dimensions

All sizes are shown in the tables and specifications in the individual Product Data Sheets.

Installation instructions

Depending on the system and components, on-site fabrication may require dedicated sheet-working machines.

Application advantages

Since the system components complement each other, they can be quickly assembled or provided with additional items on-site. On-site fabrication requires due consideration of the extra time and sizing required for the ductwork production and/or modification.

Marking

ALNOR products carry the Polish conformity mark B for construction products and product codes as shown in the technical specifications listed in this catalogue.

ALNOR® ventilation systems
is a registered trademark protected by a technical patent. All modification rights reserved.

Corner for square duct flange frames
NQ



Description

NQ corner combined with PQ flange profile are used for building rectangular ventilation ducts. The standard NQ-20 corner piece is suitable for rectangular duct sections with the long side up to ca. 800 mm. For bigger sizes, the NQ-20L long corner is recommended. If the short side of the rectangular duct section is less than 150 mm, it is better to use the NQ-20K short corner. For larger ventilation ducts, NQ-30 and NQ-40 corner are required.

Available materials — Product code examples

NQ-...-...	- galvanized steel sheet
NQ-...-...-K	- 1.4301/304 stainless steel sheet
NQ-...-...-K-316L	- 1.4404/316L stainless steel sheet, molybdenum-enriched
NQ-...-...-A	- AW-1050A H24 aluminium sheet

Product code example

Product code: **NQ - ... - 20**

type
material
size

Dimensions

NQ-...-20 corner

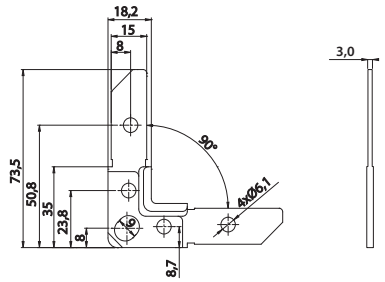

NQ-...-20K corner

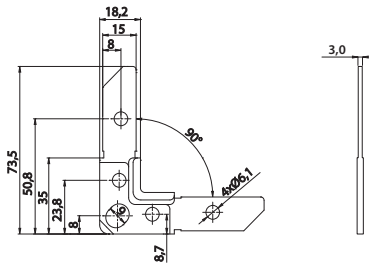

NQ-...-20L corner

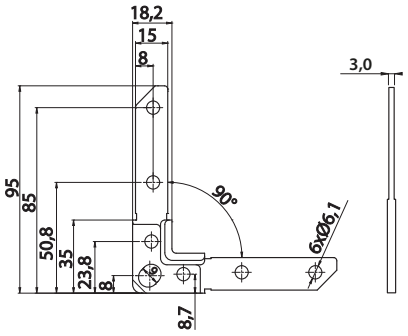

NQ-...-30 corner

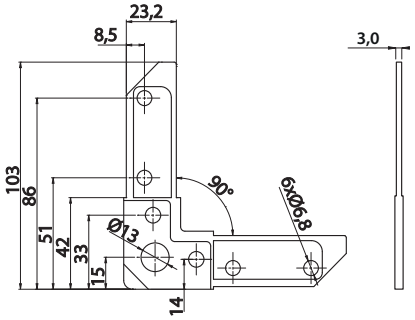

NQ-...-40 corner

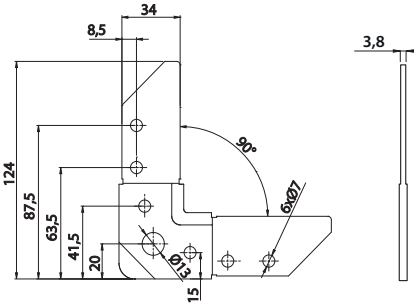

ALNOR® ventilation systems
is a registered trademark protected by a technical patent. All modification rights reserved.

Corner for rectangular duct flange frames

NQ-SH



Description

NQ-SH corner are specifically dedicated for fabrication of flange frames using a SWAH 12-roller machine. Together with the flange frame channels, they are used for building rectangular ducts and fittings. The corner straps in a size 30, 20 or 20L (long version) are used depending on the ductwork size and the flange frame channels chosen.

Available materials — Product code examples
NQ-...-SH — galvanized steel sheet

Product code example
Product code: **NQ-20-SH**

type

Dimensions

NQ-20-SH corner

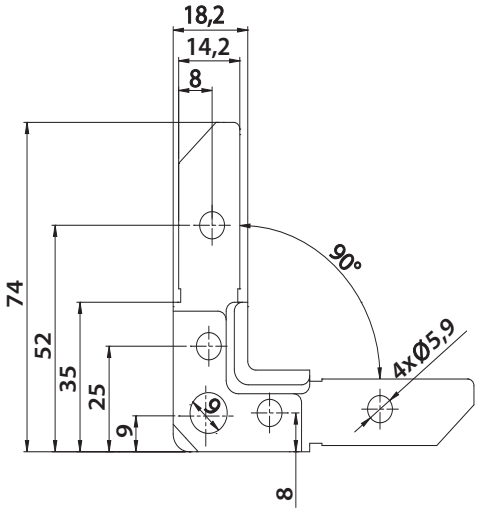

NQ-20L-SH corner

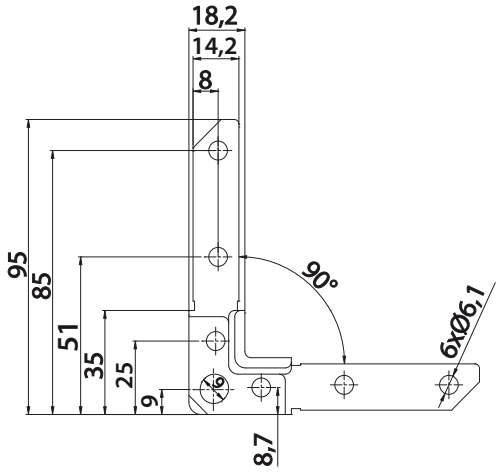

NQ-20L-SH corner

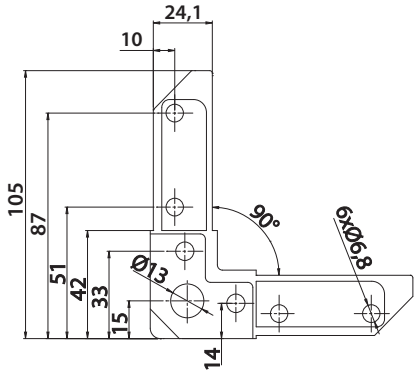

ALNOR® ventilation systems
is a registered trademark protected by a technical patent. All modification rights reserved.

Flange profile for rectangular ducts

PQ



Description

PQ flange profiles are made from galvanized steel sheet and designed for butt-joining of square ducts. They are fitted at the bare ends of square ducts and fittings to form flange frames. Three flange sizes are available for various duct sizes and internal pressure levels.

Packaging: The 5-metre flages are available in packs of 500 metres. The 3-metre flanges are available in packs of 300 metres.

Available materials - Product code examples

PQ-C - galvanized steel sheet
PQ-Z - Z275 galvanized steel sheet
PQ-K - 1.4301/304 stainless steel sheet
PQ-...-K-316L - 1.4404/316L stainless steel sheet, molybdenum-enriched
PQ-A - AW-1050A H24 aluminium sheet

Product code example

Product code: **PQ - C - 20 - ECO**
type
material
dimension
model

Dimensions

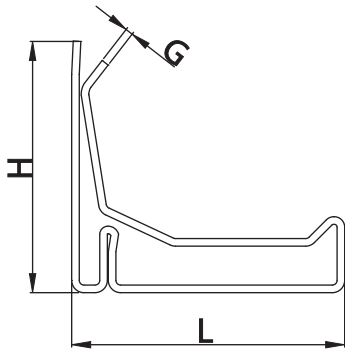

Profil PQ-C

Product code	*Height H (mm)*	*Width L (mm)*	*Thickness G (mm)*
PQ-C-20	25	20	0.7
PQ-C-30	25	30	0.8
PQ-C-20-ECO	25	20	0.6
PQ-C-30-ECO	25	30	0.7
PQ-C-40-ECO	30	40	0.8
PQ-Z-20	25	20	0.7
PQ-Z-30	25	30	0.8
PQ-Z-40	30	40	0.9
PQ-Z-20-ECO	25	20	0,6
PQ-Z-30-ECO	25	30	0.7
PQ-K-20*	25	20	0.6
PQ-K-30*	25	30	0.6
PQ-K-40*	30	40	0.7
PQ-A-20**	25	20	0.7
PQ-A-30**	25	30	0.8
PQ-A-40**	30	40	0.9

* Grade 1.4301 as per EN 10088.
** Grade 1050A as per EN 573-3.

Operating pressure (Pa)	*Duct size a or b*				
	< 500 (mm)	*501-1000 (mm)*	*1001-1600 (mm)*	*1601-2500 (mm)*	*2501< (mm)*
200	PQ 20	PQ 20	PQ 30	PQ 30	PQ 40
400	PQ 20	PQ 20	PQ 30	PQ 30	PQ 40
600	PQ 20	PQ 20	PQ 30	PQ 30	PQ 40
800	PQ 20	PQ 20	PQ 30	PQ 30	PQ 40
1000	PQ 20	PQ 20	PQ 30	PQ 30	PQ 40
1200	PQ 20	PQ 30	PQ 30	PQ 40	PQ 40
1500	PQ 20	PQ 30	PQ 30	PQ 40	PQ 40

ALNOR® ventilation systems
is a registered trademark protected by a technical patent. All modification rights reserved.

Flange profile for Class C rectangular ducts

PQ-...-SIL



Description

PQ flanges are made from galvanized steel sheet and designed for butt joining of rectangular ducts. They are fitted at the bare ends of square ducts and fittings to form flange frames. Three flange sizes are available for various duct sizes and internal pressure levels.
The sealing provides highly airtight butt joints between the ventilation ducts. The sealing temperature range is from -30˚C to +140˚C. The sealing compound is resistant to ageing, adheres well to the surface, has high mechanical strength, and provides anti-corrosion protection.

PQ-...-SIL flange with sealant helps to achieve airtightness class C in rectangular ducts.

Packaging: The 5-metre flanges are available in packs of 500 metres. The 3-metre flanges are available in packs of 300 metres.

Available materials - Product code examples

PQ-C-...-SIL - galvanized steel sheet
PQ-Z-...-SIL - Z275 galvanized steel sheet
PQ-K-...-SIL - 1.4301/304 stainless steel sheet
PQ-K-...-SIL-316L - 1.4404/316L stainless steel sheet, molybdenum-enriched
PQ-A-...-SIL - AW-1050A H24 aluminium sheet

Product code example

Product code: **PQ - C - 20 - ECO - SIL**
type
material
dimension
model
sealing

Dimensions

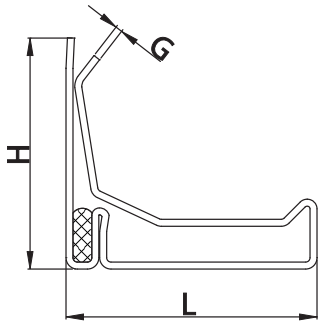

PQ-SIL flange with sealant

Product code	*Height H (mm)*	*Width L (mm)*	*Thickness G (mm)*
PQ-C-20-SIL	25	20	0.7
PQ-C-30-SIL	25	30	0.8
PQ-C-40-SIL	30	40	0.9
PQ-C-20-ECO-SIL	25	20	0.6
PQ-C-30-ECO-SIL	25	30	0.7
PQ-C-40-ECO-SIL	30	40	0.8
PQ-Z-20-SIL	25	20	0.7
PQ-Z-30-SIL	25	30	0.8
PQ-Z-40-SIL	30	40	0.9
PQ-K-20-SIL*	25	20	0.6
PQ-K-30-SIL*	25	30	0.6
PQ-K-40-SIL*	30	40	0.7
PQ-A-20-SIL**	25	20	0.7
PQ-A-30-SIL**	25	30	0.8
PQ-A-40-SIL**	30	40	0.9

* Grade 1.4301 as per EN 10088.
** Grade 1050A as per EN 573-3.

Technical specifications

Mean air leak rate per PQ flange unit of length [$m^3/(m*h)$]	
PQ-C-20	0.948
PQ-C-20 sealed by hand	0.309
PQ-C-20-SIL	0.369

ALNOR® ventilation systems
is a registered trademark protected by a technical patent. All modification rights reserved.

Flange for Class C rectangular ducts

PQ-...-SIL

Technical specifications

Operating pressure (Pa)	Duct size a or b				
	< 500 (mm)	501-1000 (mm)	1001-1600 (mm)	1601-2500 (mm)	2501< (mm)
200	PQ 20	PQ 20	PQ 30	PQ 30	PQ 40
400	PQ 20	PQ 20	PQ 30	PQ 30	PQ 40
600	PQ 20	PQ 20	PQ 30	PQ 30	PQ 40
800	PQ 20	PQ 20	PQ 30	PQ 30	PQ 40
1000	PQ 20	PQ 20	PQ 30	PQ 30	PQ 40
1200	PQ 20	PQ 30	PQ 30	PQ 40	PQ 40
1500	PQ 20	PQ 30	PQ 30	PQ 40	PQ 40

Sealing

Sealing characteristics for PQ-...-...-...-SIL:

Application temperature:	-30 °C to +140 °C
Drop point:	190 °C
Anti-corrosion performance:	corrosion-resistant
Viscosity at 40 °C:	90 mm²/s
Solubility in water:	insoluble
Post-compaction penetration:	250-270 mm
Oxidation resistance:	0.06 MPa
Oil release from grease at 100 °C after 30 h:	max. 1.5%

Composition: A mixture of paraffined mineral base oils, thickened with lime soap and a polymer with improvers.

The product causes no hazardous reactions under normal conditions of use. Product classification as per the CLP Directive 1999/45/EC: not hazardous.

First aid measures

General recommendations
In any of the cases described below: If symptoms persist, immediately call a doctor or take the victim to a hospital. Show the product packaging or label. Do not give anything by mouth to an unconscious person. Place the victim in the recovery position. Keep the victim calm and monitor the breathing and the pulse. If the victim is conscious, do not give him/her any milk, fats or alcohol. Otherwise follow the instructions given below.

If inhaled:
If the vapours are harmful to the victim, immediately remove the victim out of the hazardous area to fresh air. Remove any contaminated clothing. Keep the victim calm and warm (by covering him/her with blankets). Monitor the breathing and pulse. If breathing is difficult, administer oxygen. If breathing has stopped, clear mouth of any foreign bodies and mucus, and perform artificial respiration using AMBU. If necessary, apply cardiac massage.

If on skin:
Remove any contaminated clothing. Thoroughly wash the exposed skin area or, if required, the whole body with water and soap unless there are skin burns caused by a hot product. Do not wash the skin with organic solvents such as naphtha, light petroleum distillates, or petrol. If a hot product has touched the skin, immediately put the burned skin area into cold water or rinse with running cold water for at least 10 minutes. If the product has entered under pressure into the subcutaneous layer, immediately provide the victim with medical attention.

If in eyes:
Immediately remove contact lenses, if any, and rinse the eyes with plenty of water for at least 15 minutes (keep the eyelids wide open). If the product has contaminated only one of the eyes, protect the other from contamination when rinsing. Avoid a strong water flow: risk of injury to the cornea.
Note! All persons exposed to the risk of eye contamination should be instructed about the need to rinse the eyes immediately and how to do it properly.

ALNOR® ventilation systems
is a registered trademark protected by a technical patent. All modification rights reserved.

Flexible duct connector
AMT

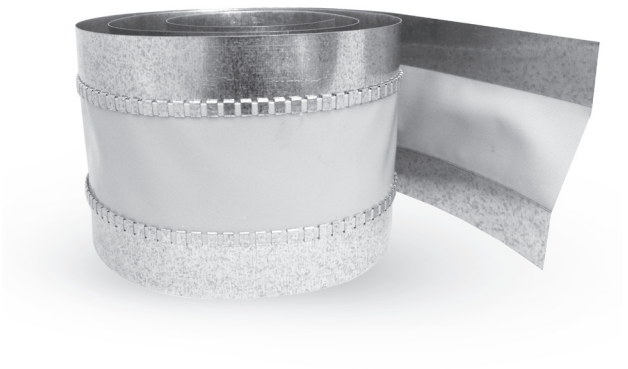

Description

The AMT flexible duct connector (a joint consisting of a layer of fabric and two strips of sheet metal on both sides) can be combined with PQ flange to fabricate square flexible duct connectors or with the FLS flanges to fabricate round flexible duct connectors. The flexible duct connectors eliminate the noise and vibrationsfrom transmitting through the ducting system. Widely used between the outlet mechanical equipment generating noise and vibrations, such as air handling units and fans, and the duct.
The design of the AMT flexible duct connector provides excellent water and air tightness performance according to class D requirements of EN 1507:2007. The tightness class compliance was tested at 2000 Pa

Available materials — Product code examples

AMT-...-... -... - galvanized steel sheet, PVC coated fabric
AMT-K-...-... -... - stainless steel, PVC coated fabric
AMT-HI-T-...-...-... - galvanised steel sheet, silicone coated fabric
AMT-PU-...-...-... - galvanised steel sheet, polyurethane (PU) coated fabric
AMT-K-PU-...-...-... - stainless steel, polyurethane (PU) coated fabric
AMT-NEP-...-...-... - galvanised steel sheet, neoprene coated fabric

Product code example

Product code: **AMT - PU - aaa - bbb - aaa**

type
fabric
metal width
fabric width

Dimensions

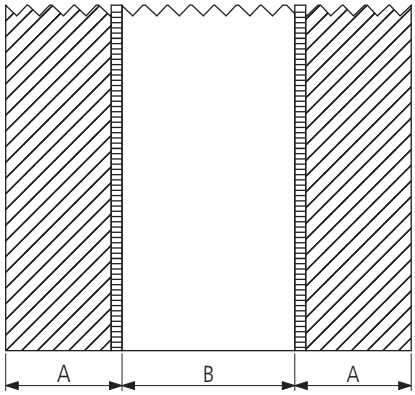

Product code	*Metal width A (mm)*	*Fabric width B (mm)*	*Length in roll (m)**
AMT-35-60-35	35	60	25
AMT-45-60-45	45	60	25
AMT-45-75-45	45	75	25
AMT-70-100-70	70	100	25
AMT-K-35-60-35	35	60	25
AMT-K-45-60-45	45	60	25
AMT-K-45-75-45	45	75	25
AMT-K-70-100-70	70	100	25
AMT-HI-T-35-60-35	35	60	25
AMT-HI-T-45-60-45	45	60	25
AMT-HI-T-45-75-45	45	75	25
AMT-HI-T-70-100-70	70	100	25
AMT-PU-35-60-35	35	60	25
AMT-PU-45-60-45	45	60	25
AMT-PU-45-75-45	45	75	25
AMT-PU-70-100-70	70	100	25
AMT-K-PU-35-60-35	35	60	25
AMT-K-PU-45-60-45	45	60	25
AMT-K-PU-45-75-45	45	75	25
AMT-K-PU-70-100-70	70	100	25
AMT-NEP-45-60-45	45	60	25
AMT-NEP-70-100-70	70	100	25

*Other length sizes available on request.

ALNOR® ventilation systems
is a registered trademark protected by a technical patent. All modification rights reserved.

Flexible duct connector

AMT

Technical specifications

	Temperature range	*Temperature resistance: max. 2 h*	*Material properties*
PVC	-30˚C / +80˚C	–	General use — economical choice
Silicone	-30˚C / +260˚C	400˚C	Resistance to high temperatures, high resistance to ageing, weathering and chemicals
Polyurethane (PU)	-30˚C / +180˚C	400˚C	High wear resistance
Neoprene	-30˚C / +180˚C	–	Synthetic rubber — good for outdoor applications; high resistance to alkaline conditions and petrol.

ALNOR® ventilation systems
is a registered trademark protected by a technical patent. All modification rights reserved.

Turning vane guides for rectangular fittings

PRQ



Description

PRQ turning vane guides are designed for installation of air vanes inside square fittings.
They are made from an aluminium zinc alloy and feature a rubber seal. The product is suitable for sheet thickness of 0.4 to 1.1 mm.
Unlike the guides, the vanes are fitted in the ventilation fittings according to the applicable Polish standards and they are not available as separate products.

Available materials — Product code examples
PRQ — ZnAl alloy

Product code example
Product code: **PRQ**

type

Dimensions

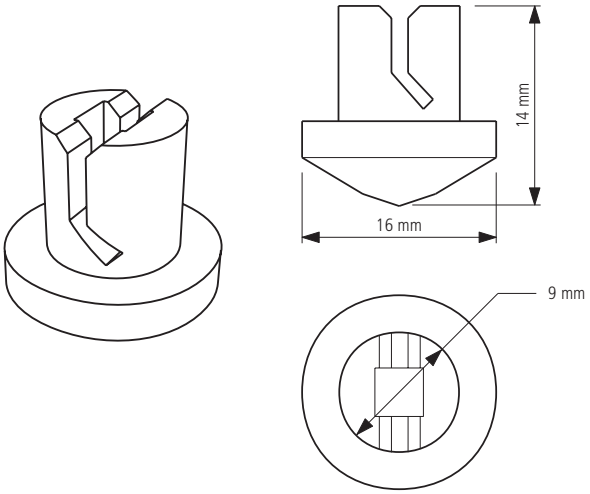

Installation diagram

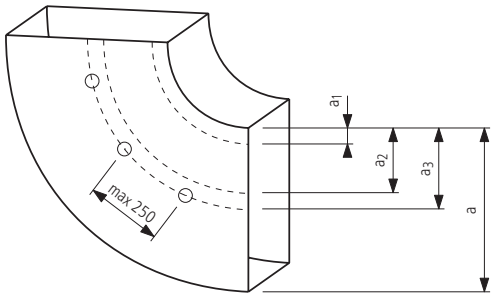

arrangement of vanes in a bend

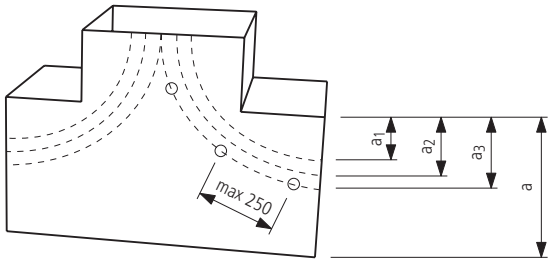

arrangement of vanes in a T-piece

Duct width (mm)	*Number of vanes (pcs)*	*Vane spacing*		
		a_1	a_2	a_3
> 400-800	1	a/3	-	-
> 801-1600	2	a/4	a/2	-
> 1601-2000	3	a/8	a/3	a/2

ALNOR® ventilation systems
is a registered trademark protected by a technical patent. All modification rights reserved.

Cross-connector for reinforcing rod

WKK-PCV, WKK-OCY

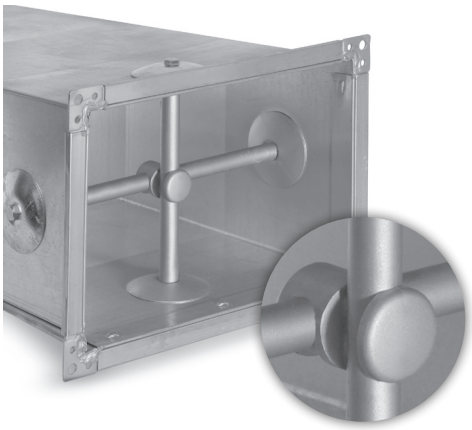

WKK-PCV



WKK-OCY



Description

WWK cross-connectors for reinforcing rod provide a cross-shaped bracing inside large ducts and fittings to prevent the collapse of walls. A cross-connector ties two steel or aluminium tubes sized $^{3}/_{8}$" or $^{1}/_{2}$" in diameter. WKK-OCY galvanized steel corss-connectors can also be installed in smoke venting systems and inside high-temperature ductwork. WKK-PCV cross-connectors are an excellent choice for ductwork made of stainless sheet sheets or aluminium sheets.

Product code example

Product code: **WKK-OCY-3-8**

type

Dimensions

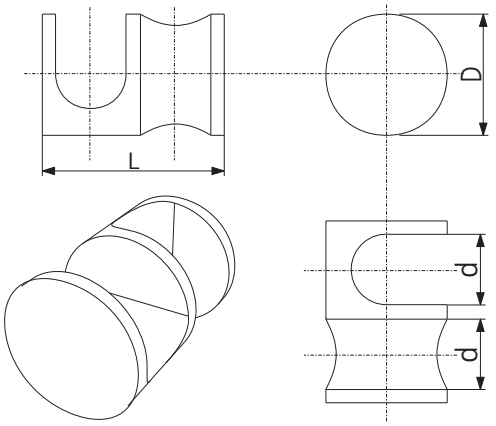

Product code	*L (mm)*	*D (mm)*	*d (in)*	*d (mm)*	*material*
WKK-PCV-3-8	45	30	$^{3}/_{8}$	16	PVC

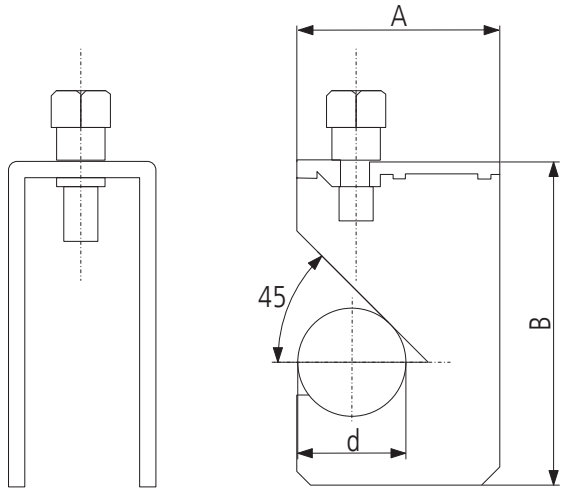

Product code	*Thickness (mm)*	*d (in)*	*d (mm)*	*A (mm)*	*B (mm)*
WKK-PCV-3-8	3	$^{3}/_{8}$	16	35	64
WKK-OCY-1-2	3	$^{1}/_{2}$	21	40	70

Installation diagram

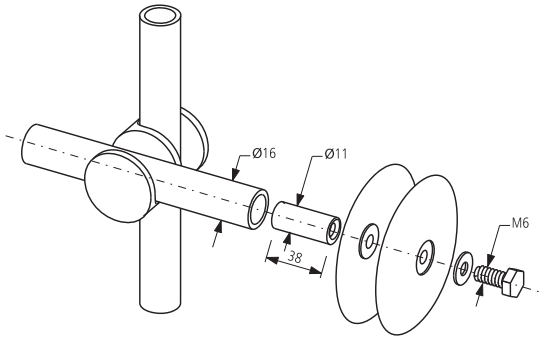

ALNOR® ventilation systems
is a registered trademark protected by a technical patent. All modification rights reserved.

Reinforcing rod and dowel for ventilation ductwork

RURA, WKD

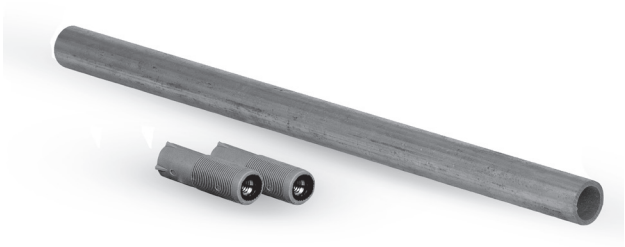

Description

RURA tubes have several applications in ductwork fabrication. Depending on its material (galvanized steel, black steel or aluminium) and size ($^3/_8$" ; $^3/_4$" ; 1" ; $^1/_2$"), the tubes can serve as duct reinforcement/ stiffening or as condensation drain pipes in air intakes.

Available materials — Product code examples
WKD - polypropylene with a brass sleeve

Product code example
Product code: **WKD**

type

Dimensions

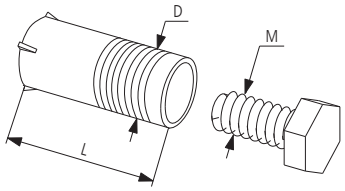

WKD dowel

Product code	*D (mm)*	*L (mm)*	*M (mm)*
WKD	11	38	6

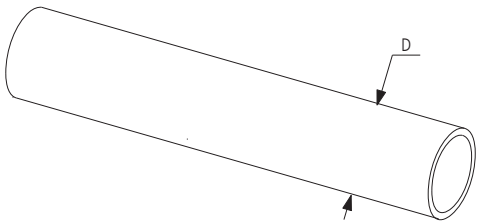

RURA

Product code	*D (in)*	*D (mm)*	*Intended use*
RURA OC. $^3/_8$"	$^3/_8$	16	duct reinforcement
RURA OC. $^3/_4$"	$^3/_4$	26	roof air intakes, d_{max} = 630
RURA OC. 1"	1	33	roof air intakes, d_{min} = 710
RURA KW. $^3/_8$"	$^3/_8$	16	duct reinforcement
RURA AL. $^3/_8$"	$^3/_8$	16	duct reinforcement
RURA AL. $^3/_4$"	$^3/_4$	26	roof air intakes, d_{max} = 630
RURA CZ. $^3/_8$"	$^3/_8$	16	duct reinforcement

Installation diagram

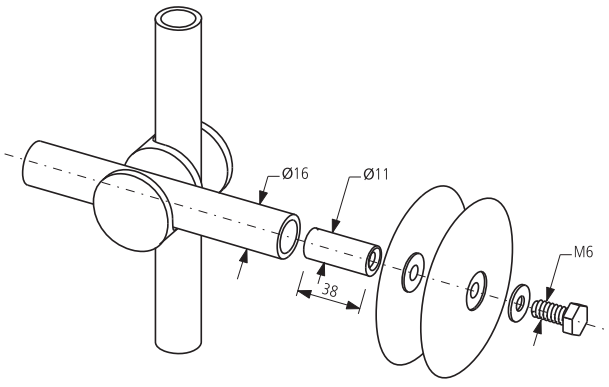

ALNOR® ventilation systems
is a registered trademark protected by a technical patent. All modification rights reserved.

Duct rod washer

WKT



Description

WKT washers are hardware pieces for straight or cross-shaped duct reinforcements in rectangular ducts and fittings. They are always installed on both sides of the ductwork wall: one piece is attached to the duct brace RURA tube and the other piece is held on the outside surface of the duct with an SRS bolt set in a plug. The chamfered form keeps the washer pressed completely against the duct sheet. This reduces the risk of tearing the duct walls under load.

Available materials — Product code examples
WKT-...- galvanized steel sheet

Product code example
Product code: **WKT-60**

type

Dimensions

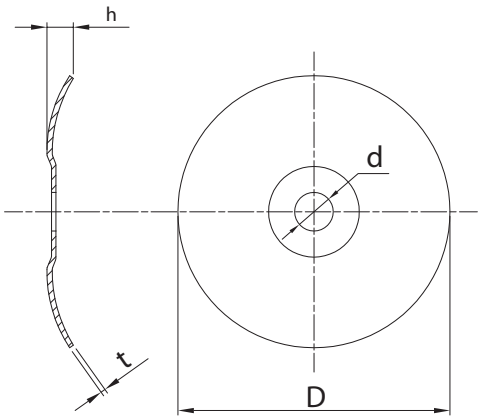

Product code	*d (mm)*	*D (mm)*	*h (mm)*	*t (mm)*
WKT	8,6	75	5	0,7

Installation diagram

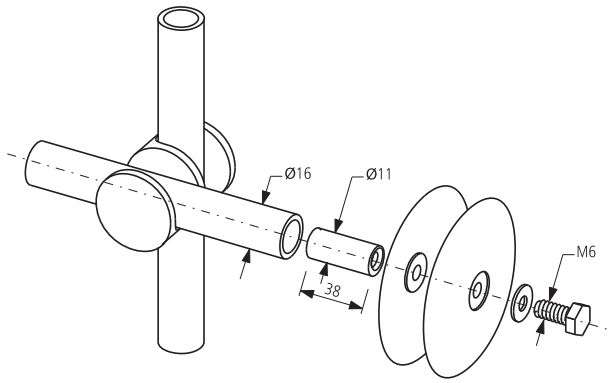

ALNOR® ventilation systems
is a registered trademark protected by a technical patent. All modification rights reserved.

Ductwork steel flanges
FLS

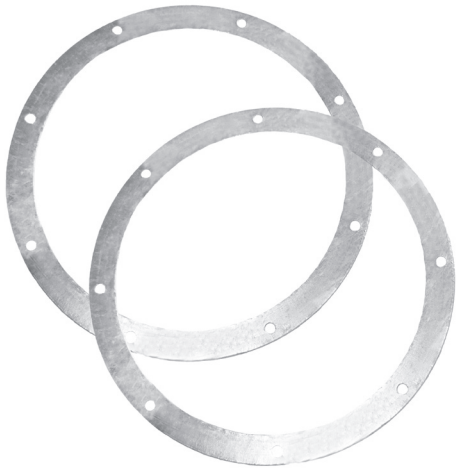

Description

FLS steel flanges are components for prefabrication of round duct parts made from galvanized steel sheet or stainless steel sheet. The flanges are bolted together with SRS steel screws, PDS-P washers and NKS nuts.

They are mainly used to manufacture roof air intake and exhaust bases in which the flanges stabilize the joints exposed to otherwise damaging wind loads. The FLS flanges can be used for butt-joining of round ducts and fittings. They provide excellent rigidity to ductwork exposed to deforming loads. The flanges are also used to fabricate connections for ductwork silencers directly attached to duct fans or roof fans with flanged joints.

Available materials — Product code examples

FLS-... - galvanized steel sheet
FLS-K-... - 1.4301/304 stainless steel sheet
FLS-K-...-316L - 1.4404/316L stainless steel sheet, molybdenum-enriched
FLS-A-... - AW-1050A H24 aluminium sheet

Product code example

Product code: **FLS - 160**

type
Ød

Dimensions

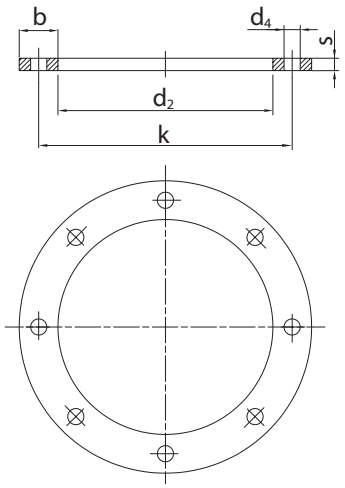

Ød$_{nom}$ (mm)	Ød$_2$ (mm)	bxs (mm)	Øk+/-0.5 (mm)	Ød$_4$+/-0.5 (mm)	Number of holes	Weight (kg)
80	82	25x3	112	9.5	4	0.18
100	102	25x3	132	9.5	4	0.21
112	114	25x3	144	9.5	4	0.24
125	127	25x3	157	9.5	4	0.26
140	142	25x4	172	9.5	6	0.41
150*	152	25x4	182	9.5	6	0.43
160	162	25x4	192	9.5	6	0.46
180	182	25x4	212	9.5	6	0.51
200	203	25x4	233	9.5	6	0.56
224	227	25x4	257	9.5	6	0.62
250	253	25x4	283	9.5	6	0.69
280	283	30x4	317	9.5	8	0.93
300*	303	30x4	337	9.5	8	0.97
315	318	30x4	352	9.5	8	1.03
355	358	30x4	392	9.5	8	1.15
400	404	30x4	438	9.5	8	1.28
450	454	30x4	488	9.5	8	1.43
500	504	30x4	538	9.5	8	1.58
560	564	35x4	600	9.5	12	2.07
630	634	35x4	670	9.5	12	2.31
710	714	35x4	750	9.5	12	2.58
800	804	35x4	840	9.5	16	2.90
900	904	35x4	940	9.5	16	3.24
1000	1005	35x4	1041	9.5	16	3.59
1120	1125	40x5	1169	9.5	24	5.74
1250	1255	40x5	1299	9.5	24	6.38

All sizes standardized to DIN 24154 Series 1.
* Sizing as per EN 12220

ALNOR® ventilation systems
is a registered trademark protected by a technical patent. All modification rights reserved.

Self-drilling screws for joining ventilation ducts

WGO

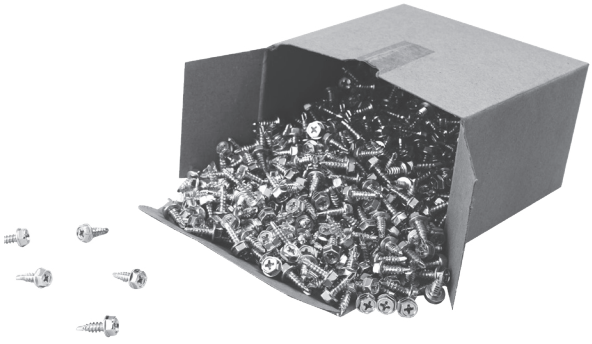

Description

WGO self-drilling screws are quick-to-drive fasteners for attaching type L, Z and T brackets to metal sheet. They can also be used to fasten round ducts to round fittings. WGO screws are available with hex-flat heads and/or Philips or Allen key slots. The screws are galvanized. Driver bits are available for specific screw head forms and slots. See the driver bit codes below:

WGO-NK-KL - hex socket bit
WGO-NK-KZ - Philips slot bit
WGO-NK-IB - Allen slot bit

Available materials - Product code examples
WGO...-...- galvanized steel sheet

Product code example
Product code: **WGO13-KL**

type

Dimensions

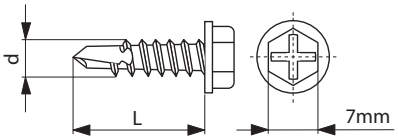

Product code	*Ød (mm)*	*L (mm)*	*Head form*
WGO-D-09	4.2	9	hex flats & Philips slot
WGO-D-13	4.2	13	hex flats & Philips slot

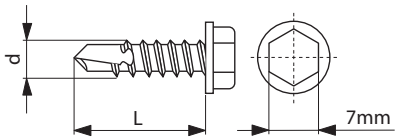

Product code	*Ød (mm)*	*L (mm)*	*Head form*
WGO09-KL	4.2	9	hex flats
WGO13-KL	4.2	13	hex flats
WGO16-KL	4.2	16	hex flats
WGO19-KL	4.2	19	hex flats
WGO25-KL	4.2	25	hex flats

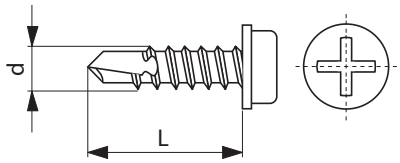

Product code	*Ød (mm)*	*L (mm)*	*Head form*
WGO09-KZ	4.2	9	Philips slot
WGO13-KZ	4.2	13	Philips slot
WGO16-KZ	4.2	16	Philips slot
WGO19-KZ	4.2	19	Philips slot
WGO25-KZ	4.2	25	Philips slot

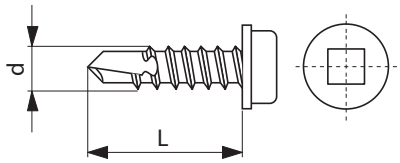

Product code	*Ød (mm)*	*L (mm)*	*Head form*
WGO09-IB	4.2	9	Philips slot
WGO13-IB	4.2	13	Philips slot
WGO16-IB	4.2	16	Philips slot
WGO19-IB	4.2	19	Philips slot
WGO25-IB	4.2	25	Philips slot

ALNOR® ventilation systems
is a registered trademark protected by a technical patent. All modification rights reserved.

Wire mesh for ventilation filters and air intakes
SIA

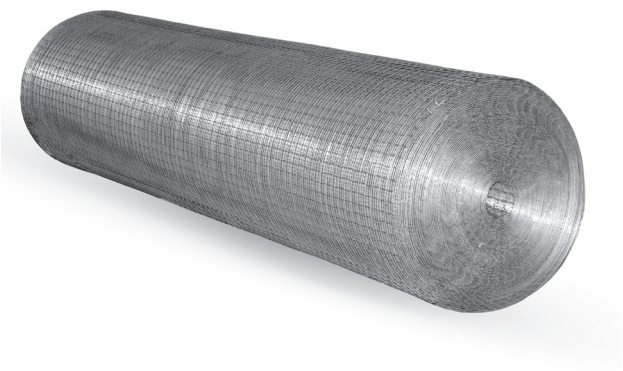

Description

SIA wire meshes are square meshes sized 12.7 mm or 10 mm. They are designed for fabrication of steel roof air intakes and wall air intakes which require screening against insects, birds and large objects. They are also used for the fabrication of ventilation filter elements in which the wire mesh supports the filter mat and protects it from damage.

Stainless steel wire meshes, different sized meshes and wire diameters are available on request.

Available materials — Product code examples

SIA-...-... - galvanized steel sheet
SIA-K...-... - 1.4301/304 stainless steel sheet
SIA-K-...-... - 316L - 1.4404/316L stainless steel sheet, molybdenum-enriched
SIA-A-...-... - AW-1050A H24 aluminium sheet

Product code example

Product code: **SIA-1,05-1,05**

type _____

Dimensions

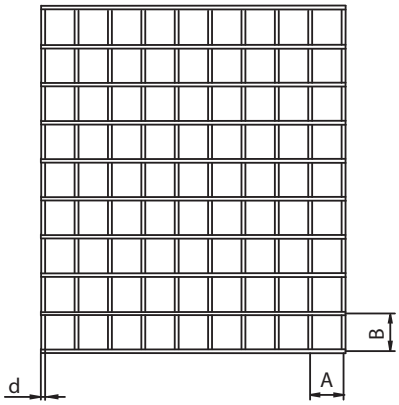

Product code	*A (mm)*	*B (mm)*	*d (mm)*	*material*
SIA-1,05-1.05	12.7	12.7	1.05	galvanized steel
SIA-K-1,05-1.05	12.7	12.7	1.05	1.4301 stainless steel
SIA-10-10-316L	10.0	10.0	1.05	1.4404 stainless steel

The standard mesh in reel is 30 m long and 1 m wide.

ALNOR® ventilation systems
is a registered trademark protected by a technical patent. All modification rights reserved.

Simple ventilation damper mechanism

KIT-DSKS

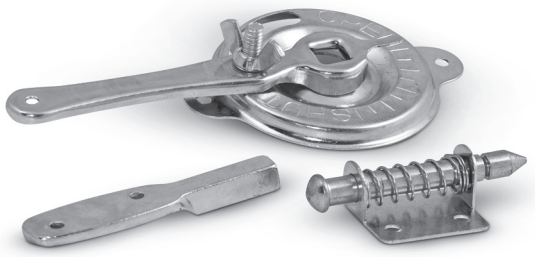

Description

The KIT-DSKS ventilation damper mechanism is an assembly for controlling ventilation duct dampers, made entirely from galvanized steel sheet. Depending on the specific type (145 or 195), the ventilation damper mechanism fits either the round duct diameter range 80-160 mm or 150-315 mm. It is also suitable for small square dampers. The top part of the damper mechanism is fastened to the damper blade with rivets or screws via two designated holes. The damper blade is fastened from above with a control linkage rod attached to the damper mechanism's control lever; the bottom of the blade is fastened with a spring-loaded piece to stabilize the damper blade in the vertical position.

Available materials — Product code examples
KIT-DSKS-...- galvanized steel sheet

Product code example
Product code: **KIT-DSKS-145**

type

Dimensions

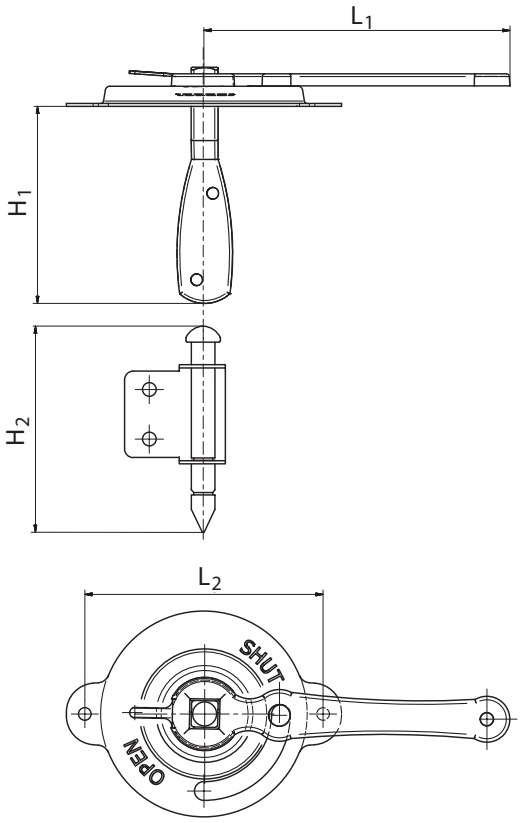

Product code	diameter size	L_1 *(mm)*	L_2 *(mm)*	H_1 *(mm)*	H_2 *(mm)*
KIT-DSKS-145	80 - 160	72	58	55	55
KIT-DSKS-195	150 - 315	110	82	68	70

ALNOR® ventilation systems
is a registered trademark protected by a technical patent. All modification rights reserved.

Round ventilation damper mechanism

KIT-DSKKS-0/KIT-DSKKS-1

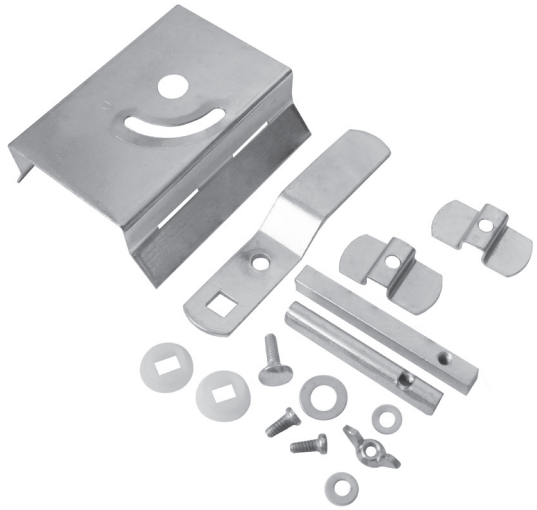

Description

The KIT-DSKKS-0 and KIT-DSKKS-1 damper mechanisms are available in galvanized steel sheet. They fit round damper sizes from 80 to 250 mm.

Available materials — Product code examples
KIT-DSKKS-1...- galvanized steel sheet

Product code example
Product code: **KIT-DSKKS-1**

type

Dimensions

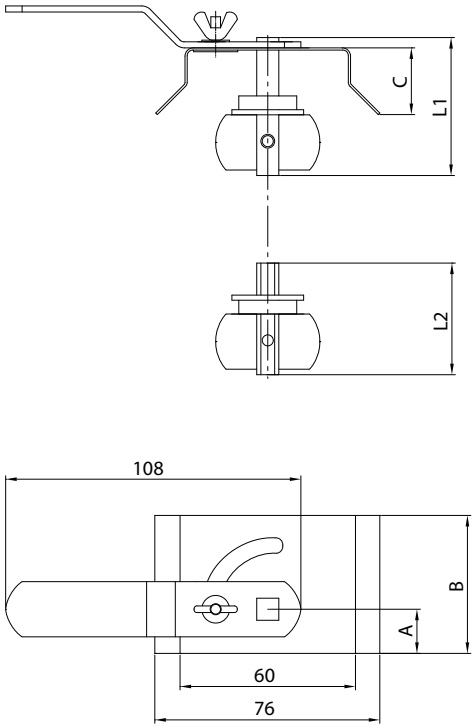

Product code	*diameter size (mm)*	L_1 *(mm)*	L_2 *(mm)*	*A (mm)*	*B (mm)*	*C (mm)*
KIT-DSKS-0	80-250	50	40	15	50	27
KIT-DSKS-1	80-250	70	60	33	90	30

ALNOR® ventilation systems
is a registered trademark protected by a technical patent. All modification rights reserved.

Insulated ventilation damper mechanism

KIT-DS



Description

The KIT-DS ventilation damper mechanism is made from galvanized steel sheet and a number of stainless steel, plastic and rubber parts. The product is intended for the fabrication of ventilation dampers which require a high operating reliability, a neat finish, a 50 mm clearance for ductwork insulation, and air tightness class 4.



Damper mechanisms are sold in sets (25 pcs. each).
Product code:
KIT-DS-100-630-SET25

Available materials — Product code examples
KIT-DS - galvanized steel sheet

Product code example
Product code: **KIT-DS-100-630**

type

Dimensions

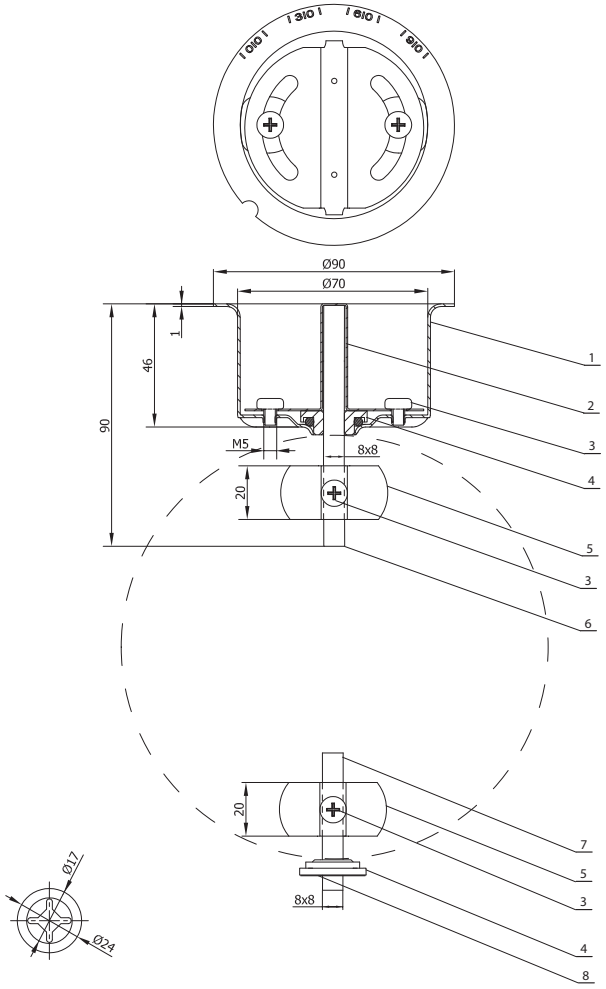

Product code	Diameter size	Material
KIT-DS-100-630	80 - 630	galvanized steel

Number	Product code	Description	Quantity (pcs)
1	KIT-DS-BDY	Housing	1
2	KIT-DS-REG	Regulator	1
3	KIT-DS-SRS-5-5	Bolt, M5x5	4
4	KIT-DS-TUL-USZ	Bearing w/seal	2
5	KIT-DS-UCB	Saddle clamp	2
6	KIT-DS-PRET-L	Long bar, 8x8	1
7	KIT-DS-PRET-S	Short bar, 8x8	1
8	KIT-DS-STW	Washer	1

ALNOR® ventilation systems
is a registered trademark protected by a technical patent. All modification rights reserved.

Ventilation damper mechanism control lever

KIT-DS-H



Description

KIT-DS-H control levers are designed for use with the KIT-DS damper mechanism. They enable easy manual opening and closing of dampers. KIT-DS-H control levers are made from galvanized steel sheet and specifically recommended for damper diameter sizes of 400 mm or greater.

Available materials — Product code examples
KIT-DS-H - galvanized steel sheet

Product code example
Product code: **KIT-DS-H**

type

Dimensions

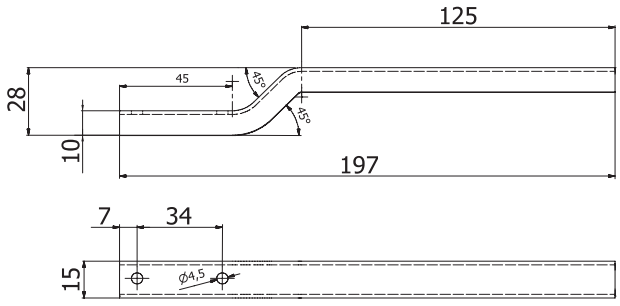

ALNOR® ventilation systems
is a registered trademark protected by a technical patent. All modification rights reserved.

Actuator coupling for ventilation damper mechanisms

KIT-DS-M



Description

KIT-DS-M actuator couplings are installed on the KIT-DS damper mechanism to enable equipping a standard damper with a power actuator without the need to rework the whole damper. They are made from galvanized steel sheet and fit most power actuators delivered by Alnor.

Note:
The KIT-DS-M actuator couplings are NOT compatible with SM24, SM230, NF24A, NF230A, SF24A, and SF230A actuators.

Available materials — Product code examples
KIT-DS - galvanized steel sheet

Product code example
Product code: **KIT-DS-M**

type

Dimensions

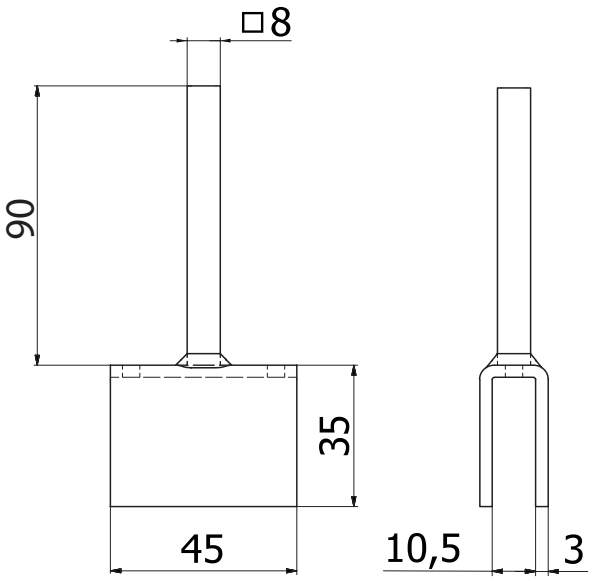

ALNOR® ventilation systems
is a registered trademark protected by a technical patent. All modification rights reserved.

Square damper mechanism

KIT-DS-SQ12



Description

The KIT-DS-SQ12 damper mechanism is made from galvanized steel sheet. The product is compatible with DSQ single-blade square dampers.
It is easy to install and remove (if needed) on-site. The control dial shows the opening ratio of the damper.
The internal parts (the rods) are fastened to the damper blade with WGO self-drilling screws.

Available materials — Product code examples
KIT-DS-SQ12- galvanized steel sheet

Product code example
Product code: **KIT-DS-SQ12**

type

Dimensions

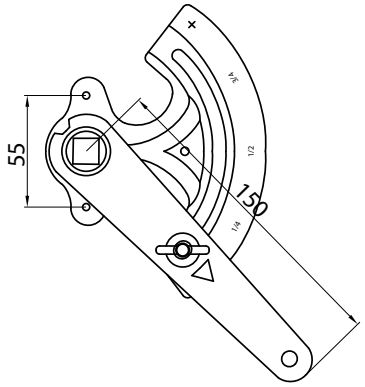

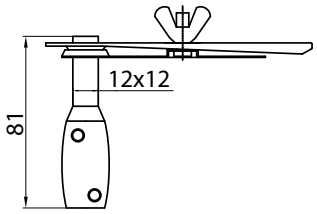

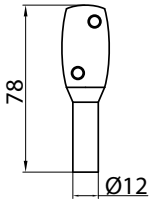

ALNOR® ventilation systems
is a registered trademark protected by a technical patent. All modification rights reserved.

Quick-fit ventilation damper mechanism

KIT-DS-JDS

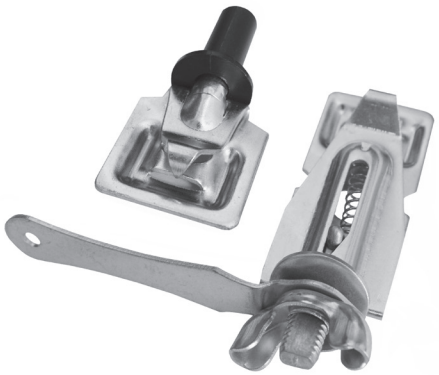

Description

The KIT-DS-JDS damper mechanism is available in galvanized steel sheet. The product fits round ventilation damper sizes from 80 to 400 mm.
Thanks to the dedicated bosses, the KIT-DS-JDS damper mechanism is very easy to install on a damper.s

Product code example
Product code: **KIT-DS-JDS**

type

Dimensions

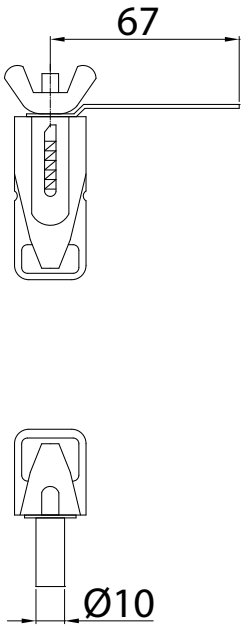

ALNOR® ventilation systems
is a registered trademark protected by a technical patent. All modification rights reserved.

Plastic ventilation damper mechanism

KIT-DS-PVC



Description

The KIT-DS-PVC damper mechanism is designed for installation in round dampers. It is totally made of plastics. It can be easily and quickly mounted to the damper by means of screws. The KIT -DS-PVC mechanism enables selecting and fixing a desired range within 0° up to 90°.

Available materials - Product code examples
KIT-DS-SQ12- galvanized steel sheet

Product code example
Product code: **KIT-DS-PVC**

type _____

Dimensions

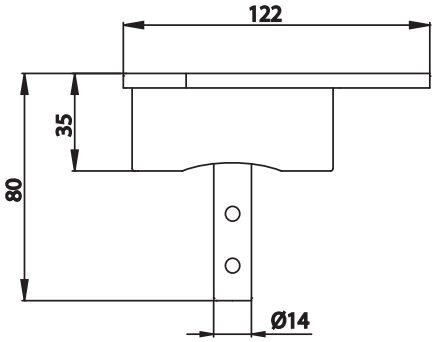

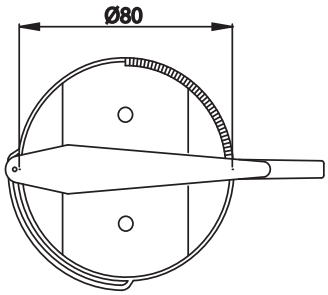

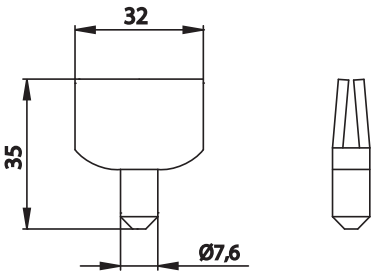

ALNOR® ventilation systems
is a registered trademark protected by a technical patent. All modification rights reserved.

Plastic & metal ventilation damper mechanism

KIT-DS-CV



Description

The KIT-DS-CV damper mechanism is available in galvanized steel sheet and features some PVC parts.
The design of the KIT-DS-CV allows installation in the ductwork to be clad with 50 mm thick insulation.
The damper blade position can be read on the 0° to 90° dial of the control knob.
The damper blade can be secured in place with a screw.
The KIT-DS-CV mechanism can be easily customized for mounting Belimo power actuators. The power actuator must be customized to a 8x8 mm square bar.
The product fits ventilation damper sizes from 80 to 400 mm.

Available materials — Product code examples

KIT-DS-CV	- galvanized steel sheet
KIT-DS-CV-K	- 1.4301/304 stainless steel sheet
KIT-DS-CV-K-316L	- 1.4404/316L stainless steel sheet, molybdenum-enriched

Product code example

Product code: **KIT-DS-CV**

type

Dimensions

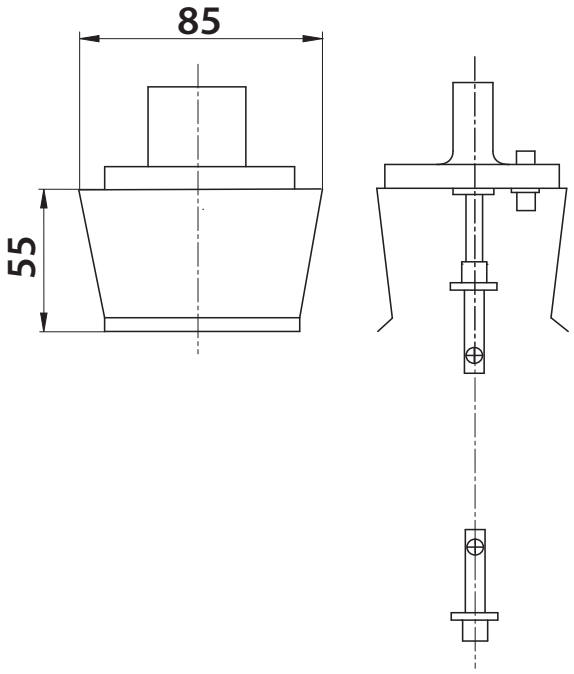

ALNOR® ventilation systems
is a registered trademark protected by a technical patent. All modification rights reserved.

Square ventilation damper mechanism

KKS-2

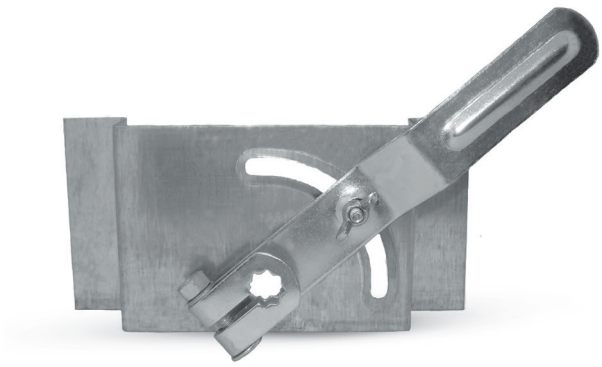

Description

The KKS-2 damper mechanism is made entirely from galvanized steel. The product is intended for the fabrication of single and multi-blade dampers. The PRET-10-10 linkage rod is fastened to the control lever with a clamp bolt. This damper mechanism is usually installed in the damper by inserting the damper control arms and a QSB panel into a PQ flange profile that forms the flange frame of the damper unit.

NOTE!
PRET-10-10 control rod bars are sold separately.

Available materials - Product code examples
KKS-2 - galvanized steel sheet

Product code example
Product code: **KKS-2**

type

Installation Method

Example of the correct installation of the damper blade control mechanism.



Dimensions

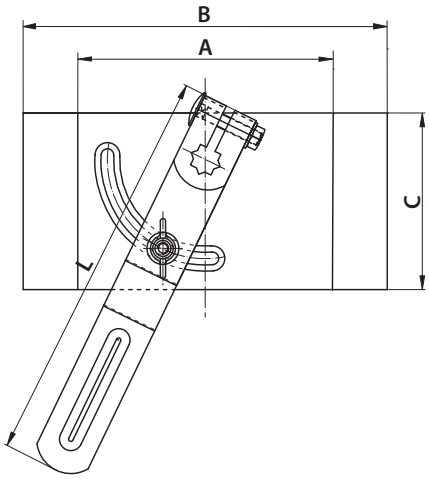

Product code	*A (mm)*	*B (mm)*	*C (mm)*	*L (mm)*	*Intended use*
KKS-2	112	160	77	175	DSQW

ALNOR® ventilation systems
is a registered trademark protected by a technical patent. All modification rights reserved.

Drawn bar for damper mechanism control linkage rods

PRET



Description

The drawn square bar is made from galvanized steel and designed for use as a control linkage rod for ventilation dampers and their control mechanisms. Drawn square bars are available in sizes 8 mm, 10 mm and 12 mm as required for specific ventilation damper models. The bar needs to be cut to size, depending on the operation method (manually or by a power actuator).

The product is measured in running metres and available in 2-metre sections. The recommended bar length for damper control linkage rods is 100 and 150 mm.

Available materials — Product code examples
PRET10-10 - galvanized steel sheet

Product code example
Product code: **PRET10-10**

type

Dimensions

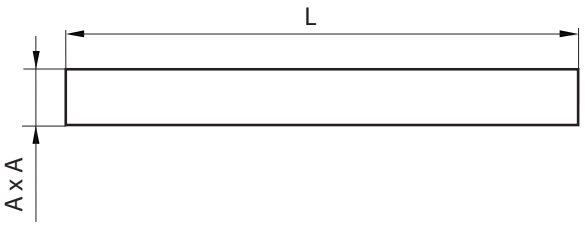

Product code	*AxA (mm)*	*L (mm)*	*Intended use*
PRET8-8	8x8	150	Round dampers + KIT-DSKS / KIT-DS damper mechanism
PRET10-10	10x10	100	DSQW damper + KKS-2 damper mechanism
PRET12-12	12x12	100	DSQW-A damper

ALNOR® ventilation systems
is a registered trademark protected by a technical patent. All modification rights reserved.

Prefabricated components for air intake and exhaust units

CSQ-PREF/WSQ-PREF



Description

The main prefabricated components for louvre air intake and exhaust units include: exhaust side angles with marked locations for WGO self-drilling screws, louvre blades which shield the opening from rain and birds, and side angle corner braces. The fabrication of air intakes also requires using SIA wire mesh, size 12.7x12.7 mm.

Available materials — Product code examples

QPPC - galvanized steel sheet
QPRC - galvanized steel sheet
QNT - galvanized steel sheet

Product code example

Product code: **QPPC**

type

Dimensions

QPPC

Louvre blade for galvanized steel air intakes: sold in units of 5 metres

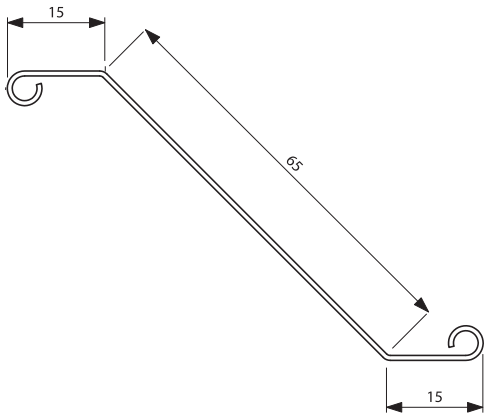

QPRC

Air intake side part: sold in units of 5 metres

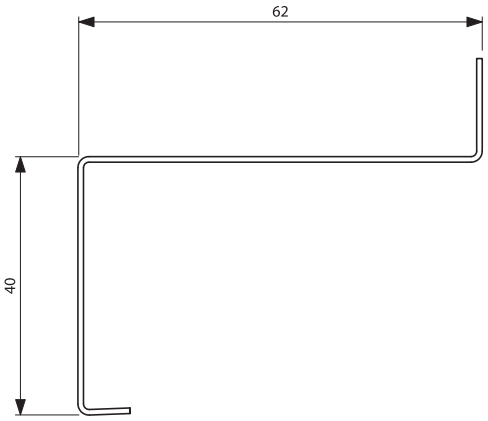

QNT

Side part corner piece for galvanized steel air intake / exhaust units.

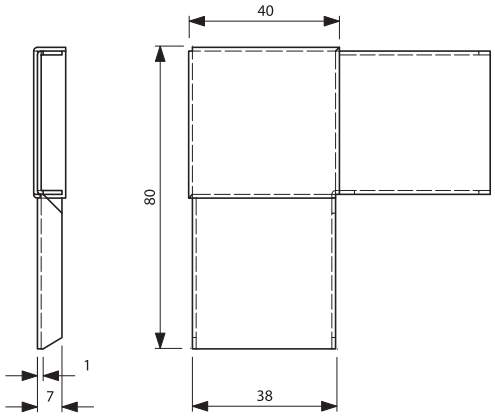

ALNOR® ventilation systems
is a registered trademark protected by a technical patent. All modification rights reserved.

Prefabricated components for aluminium air intake and exhaust units

CSQ-A-PREF/WSQ-A-PREF

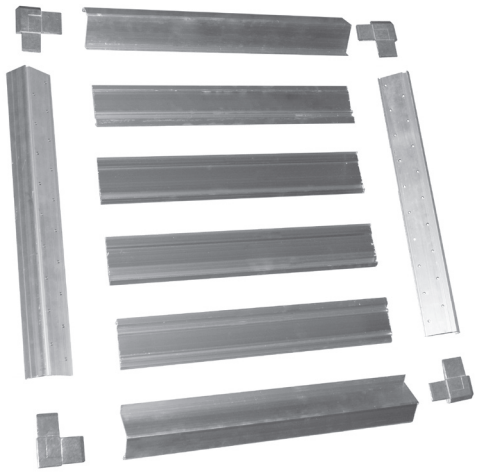

Description

The prefabricated components of louvre air intake and exhaust units are made entirely from cast aluminium. These kits allow shop and on-site fabrication of air intake and exhaust units of any size. The thick sheet walls allow building large units which are rigid and light in weight.

Available materials — Product code examples
...-... - aluminium sheet

Product code example
Product code: **QCSZ-BA**

type

Dimensions

QCLO-CH
Air intake / exhaust drip cap. The product is intended for the fabrication of air intake and exhaust units in non-standard sizes, e.g. 530x530..

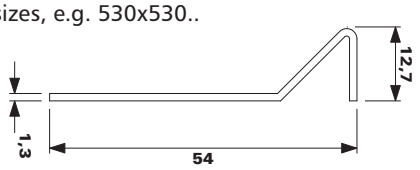

QCNA-GR-2 — right-hand
QCNA-GR-1 — left-hand
Corner piece for aluminium air intake / exhaust units.

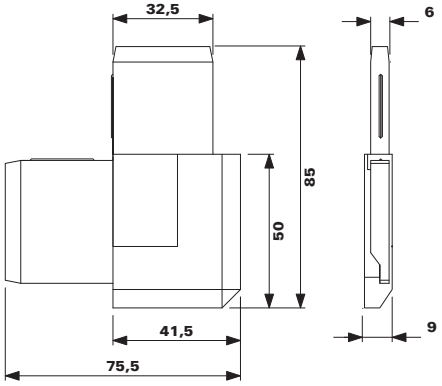

QCSP-SD
Right-hand side part: sold in units of 6 metres

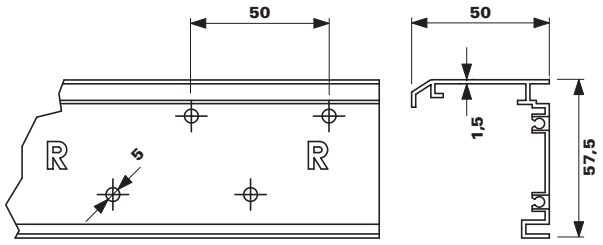

QCSP-SS
Ścianka boczna prowadząca lewa - handlowa długość 6 mb.

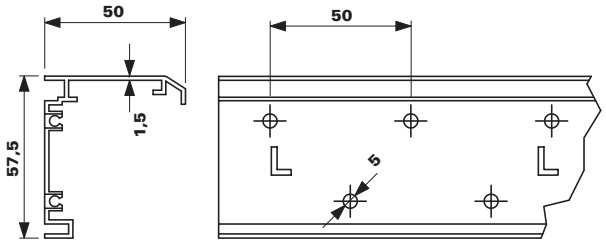

ALNOR® ventilation systems
is a registered trademark protected by a technical patent. All modification rights reserved.

CSQ-A-PREF/WSQ-A-PREF

Dimensions

QCSZ-BA

Top/bottom capping frame for air intake and exhaust units: sold in units of 6 metres. Installed at the top and bottom edges of the air intake / exhaust body.

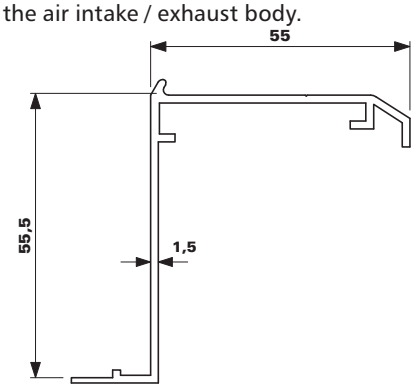

QCPA-PA

Louvre blade for aluminium air intake / exhaust units: sold in units of 6 metres.

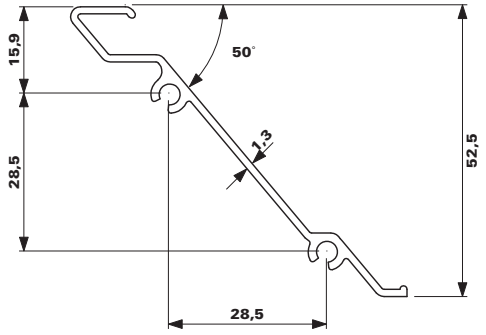

ALNOR® ventilation systems
is a registered trademark protected by a technical patent. All modification rights reserved.

Prefabricated components for stainless steel air intake and exhaust units

CSQ-K-PREF/WSQ-K-PREF

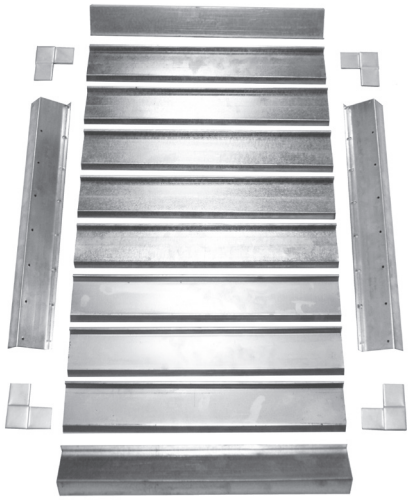

Description

The main prefabricated components for louvre air intake and exhaust units include: exhaust frame profile with marked locations for WGO self-drilling screws, louvre blades which shield the opening from rain and birds, and side angle corner piece. The fabrication of air intakes also requires using SIA wire mesh, size 12.7x12.7 mm.

The frame profile and the blades are also available in aluminium sheet.

Available materials — Product code examples
...-K - stainless steel sheet

Product code example
Product code: **QPPC-K**

type

Dimensions

QPPC-K
Louvre blade for 1.4016 stainless steel air intake / exhaust units: sold in units of 2.5 metres

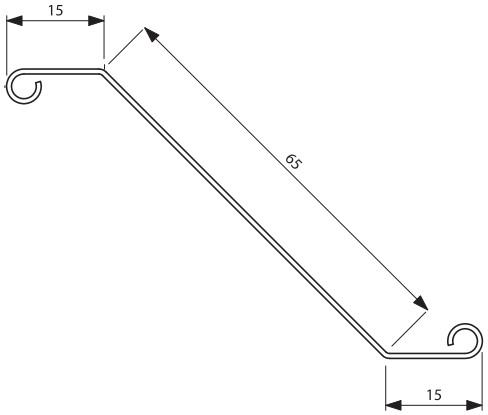

QPRC-K
Frame profile for 1.4016 stainless steel air intake / exhaust units: sold in units of 2.5 metres.

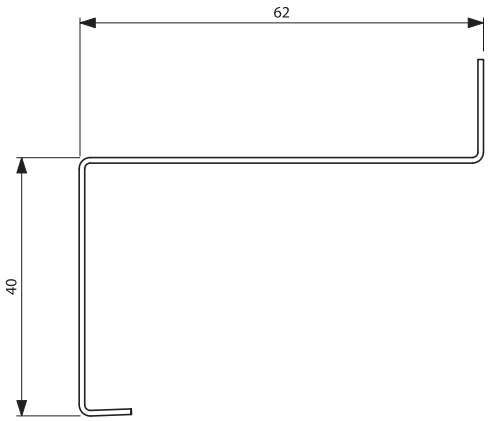

QNT-K
Corner piece for 1.4016 stainless steel air intake / exhaust units

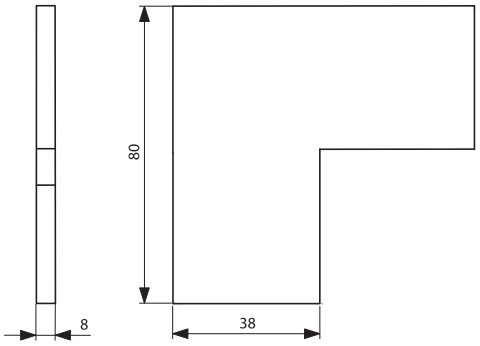

ALNOR® ventilation systems
is a registered trademark protected by a technical patent. All modification rights reserved.

DSQW-PREF

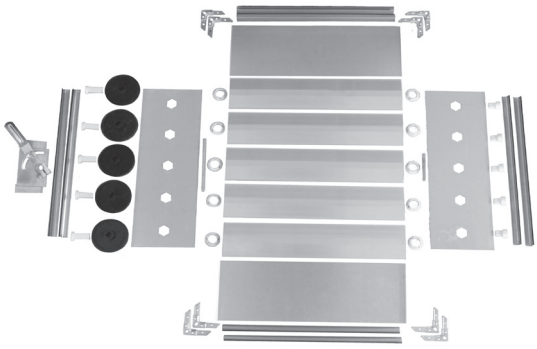

Description

DSQW damper components are kits intended for DIY fabrication. Required components: 2x QSB side angles - height and the number of holes according to the overall damper height, QPA aluminium damper blades - 100 mm high (length equal to the ductwork clear width and quantity according to the overall damper height), QKZ gears in a quantity equal to the number of damper blades, QOTD long gear shafts, short shafts for QPL-8 bearings installed in QSB holes — i.e. its quantity is always 2x the number of the gears and shafts. Building a damper requires adding the following components: PQ angle sections, NQ corner straps, sheet panels for the top and bottom angles, a control linkage rod, and KKS-2 damper mechanism (if the unit is to be adjusted by hand).

Available materials — Product code examples
... — aluminium sheet

Product code example
Product code: **QPA**

type

Dimensions

QPC
Galvanized steel damper blade for galvanized steel dampers: sold in units of 5 metres.

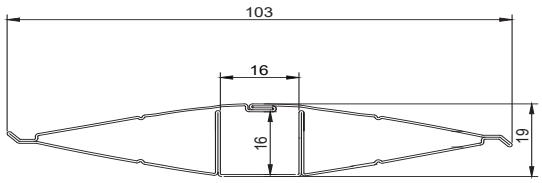

QPA
Aluminium damper blade for galvanized steel dampers: sold in units of 5 metres.

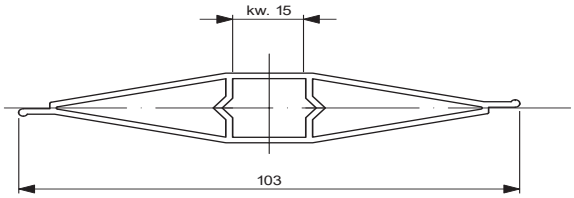

QPA-L
Aluminium damper blade with single-sided gasket seat for galvanized steel dampers: sold in units of 5 metres.

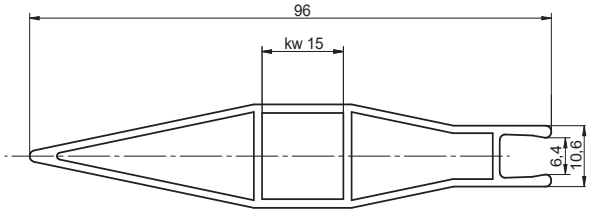

QPA-EPDM
Gasket for the QPA-L aluminium blade: sold in units of 50 metres.

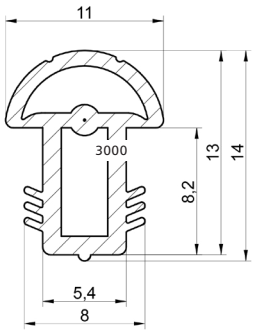

ALNOR® ventilation systems
is a registered trademark protected by a technical patent. All modification rights reserved.

Square damper prefabricated components

DSQW-PREF

Dimensions

QKZ-C
ABS gear for QPC profile.

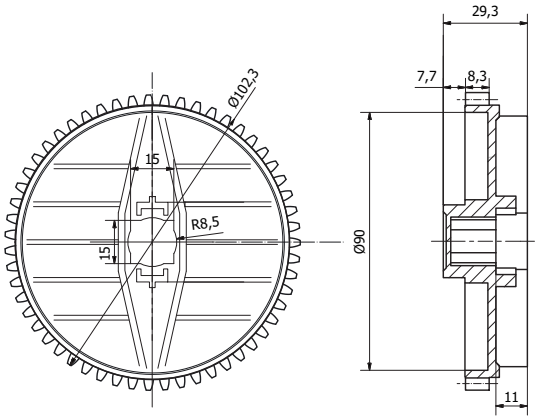

QKZ
PVC gear.

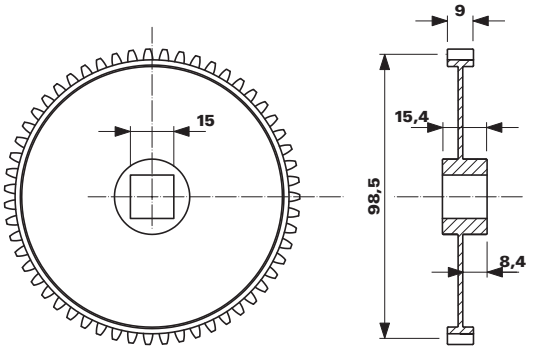

QOTD
Long plastic gear shaft.

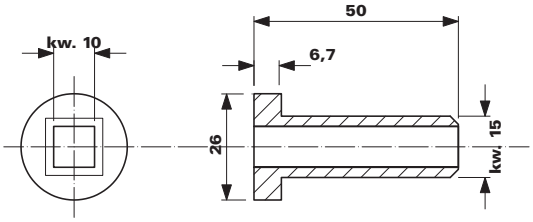

QOTK
Short plastic shaft.

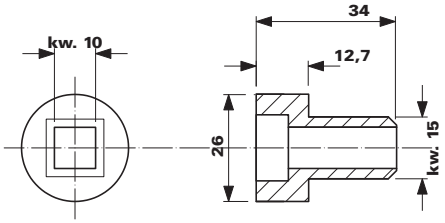

QSB-165
Side part for galvanized steel dampers: sold in units of 3 metres.

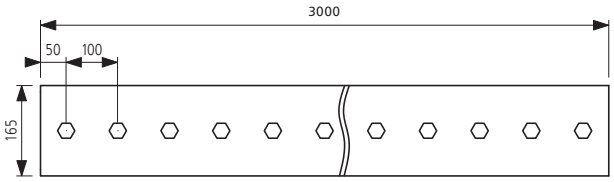

QPL-8
PVC hex-flat bearing.

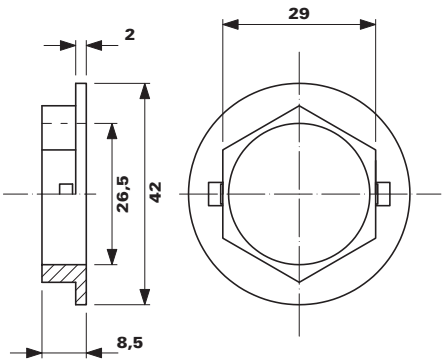

ALNOR® ventilation systems
is a registered trademark protected by a technical patent. All modification rights reserved.

DSQW-A-PREF

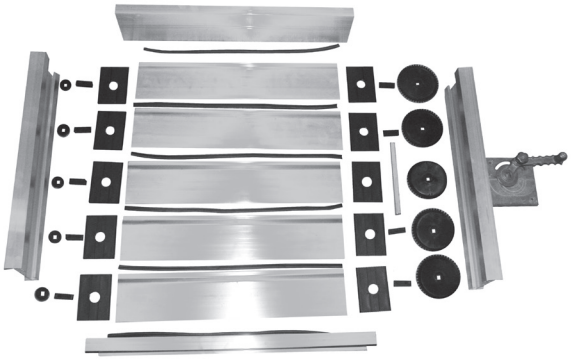

Description

The aluminium damper blades and other prefabricated accessories for DSQW-A dampers allow shop and on-site fabrication. The blades are dimensioned to enable quick assembly, and the gaskets inside the frame angle sections and on the damper blade provide air tightness class 2. The rigid sections and the sectional prefabrication design allow building dampers up to 3000 mm in width.

Available materials — Product code examples
... - L aluminium sheet

Product code example
Product code: **QDPR10-L**

type

Dimensions

QDPR10-L
Aluminium damper blade: sold in units of 6 metres. Each damper blade requires a QDUŁ12 gasket.

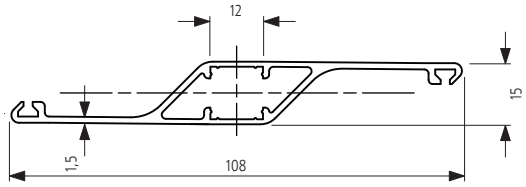

QDPR10
Solid aluminium damper blade, air tightness class 3. Sold in units of 6 running metres. Each damper blade requires a QDUŁ12 gasket.

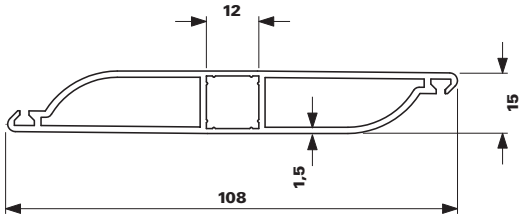

QDTAP10
End cap for QDPR10 damper blades.



ALNOR® ventilation systems
is a registered trademark protected by a technical patent. All modification rights reserved.

Aluminium square damper prefabricated components

DSQW-A-PREF

Dimensions

QDSZ11-L
Top / bottom angle: sold in units of 6 metres. Each angle requires a QDUŁ12 gasket.

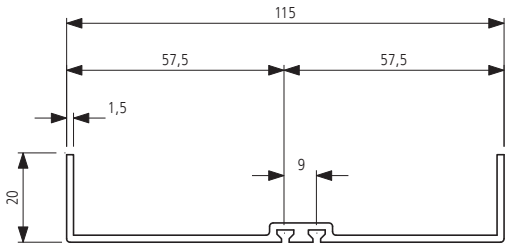

QDSP12-L
Side part: sold in units of 6 running metres.

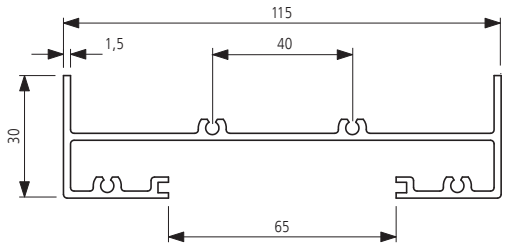

QDSD13-L
Damper split angle: sold in units of 6 metres. Use the damper split angle with A ≥ 1400 mm.

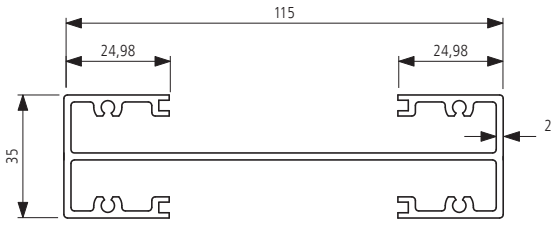

Dimensions

QDUŁ12
The rubber gasket for QDPR10-L damper blades and QDSZ11-L angles. Temperature resistance: -10˚C to +55˚C, class 2 according to EN 12365-1.

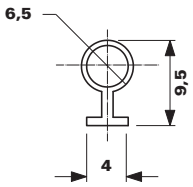

QDPMS80
Aluminium actuator mount - to be fastened to a QDSP12-L side angle. Required length: 150-200 mm, depending on the type of the power actuator.

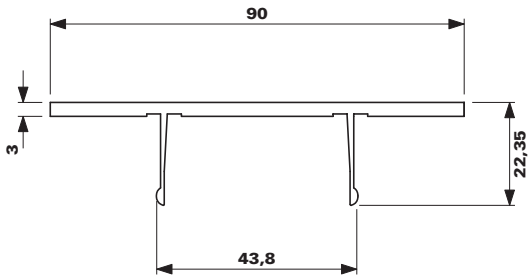

12x12 mm drawn bar

PRET-A-12-12-100

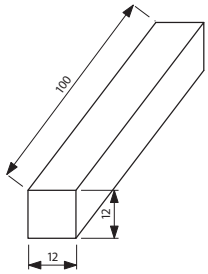

PRET-A-12-12-150

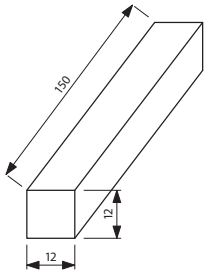

ALNOR® ventilation systems
is a registered trademark protected by a technical patent. All modification rights reserved.

DSQW-A-PREF

Dimensions

QDZK06
Spacers - required for non-standard multi-blade damper sizes, e.g. 530x530 mm



QDMPS-SF-PQO
Damper mechanism



QDCPS93
A complete set of components made from GRPA (glass-reinforced polyamide). The maximum temperature resistance is ca. 80°C. Components included:
- 1x gear
- 1x bearing shell
- 2x shafts
- Left- and right-hand slide-in piece



Dimensions

QDCPS93-HI
A complete set of components for building dampers with the temperature range increased to +120°C. Components included:
- 1x gear
- 1x bearing shell
- 2x shafts
- Left- and right-hand slide-in piece



ALNOR® ventilation systems
is a registered trademark protected by a technical patent. All modification rights reserved.

Prefabricated components for self-closing dampers

DSQOW-A-PREF



Description

The aluminium damper blades and other prefabricated accessories for DSQW-A dampers allow shop and on-site fabrication. The blades are dimensioned to facilitate quick assembly. The prefabricated components are identical to those used in DSQW-A dampers, except plastic slide-in pieces and blade sections which provide a non-return operation by opening in one direction of the flow and closing in the other.

Temperature resistance: -20˚C to +90˚C
Damper blade pressure strength: ca. 16 Pa

Product code example
Product code: **QDPS080**

type

Dimensions

QDPS080
Aluminium damper blade: sold in units of 6 metres.

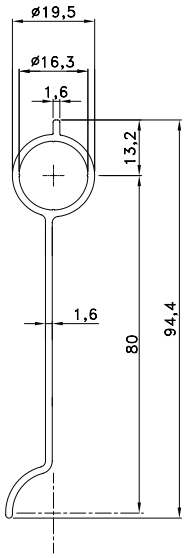

QDSZ11-L
Top / bottom angle: sold in units of 6 metres. Each angle requires a QDUŁ12-L gasket.

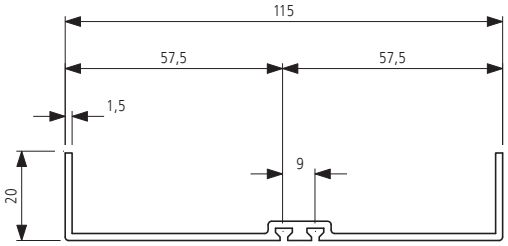

QDSP12-L
Side angle: sold in units of 6 metres.

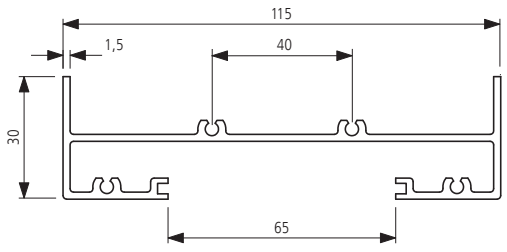

ALNOR® ventilation systems
is a registered trademark protected by a technical patent. All modification rights reserved.

Prefabricated components for self-closing dampers

DSQOW-A-PREF

Dimensions

QDSD13-L
Damper split angle: sold in units of 6 running metres. Use the damper split angle with A ≥ 1400 mm.

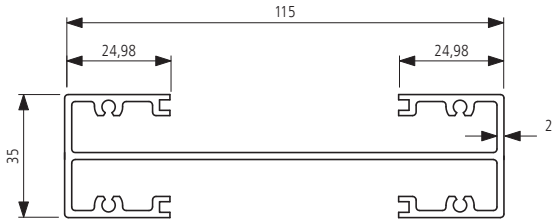

QDUŁ12
Rubber gasket for QDSZ11 angles.

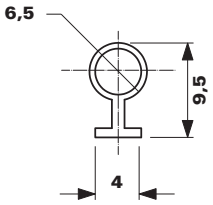

QDCPS200
A complete set of components made from GRPA (glass-reinforced polyamide: PA6+GF20%). Components included:
- 1x slide-in piece
- 1x bearing shell

Temperature resistance: -20˚C to +90˚C

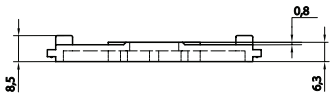

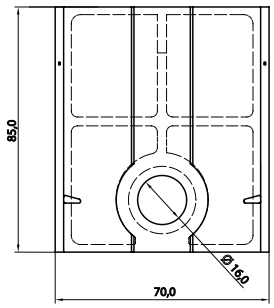

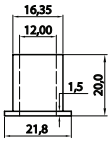

Technical specifications

Flow chart

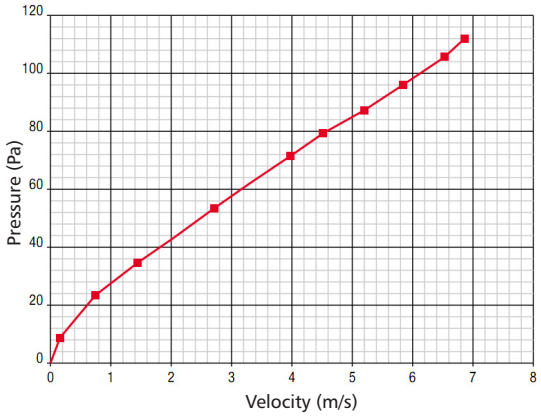

ALNOR® ventilation systems
is a registered trademark protected by a technical patent. All modification rights reserved.

Manual riveter for ventilation duct flange frames

NI-AKB-70



Description

The NI-AKB-70 manual riveter is intended for riveting flange frames to ducts.
It is an ideal tool for prefabrication and installation of ductwork systems which require a large number of cuts to length.
The manual riveter has a hand-operated actuation gear which moves the die inside the riveting head to make the punch.
The riveting head size is relatively low for easy riveting in areas with a low access clearance.

Parameters:
- control: manual
- net weight: 7 kg

Product code example
Product code: **NI-AKB-70**

type

Dimensions

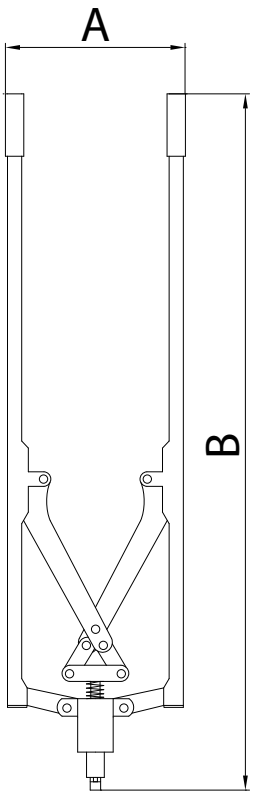

Product code	*A (mm)*	*B (mm)*
NI-AKB-70	380	980

Material	*max. sheet thickness (mm)*	*max. total thickness of material to be punched (mm)*
galvanized steel	0.7	2.1
stainless steel	0.5	1.5
aluminium	1.0	3.0

ALNOR® ventilation systems
is a registered trademark protected by a technical patent. All modification rights reserved.

Ventilation finish trim

ALNOR reserves the right to modify technical specifications in line with the policy of continuous product improvement.

ALNOR® ventilation systems
is a registered trademark protected by a technical patent. All modification rights reserved.

System description

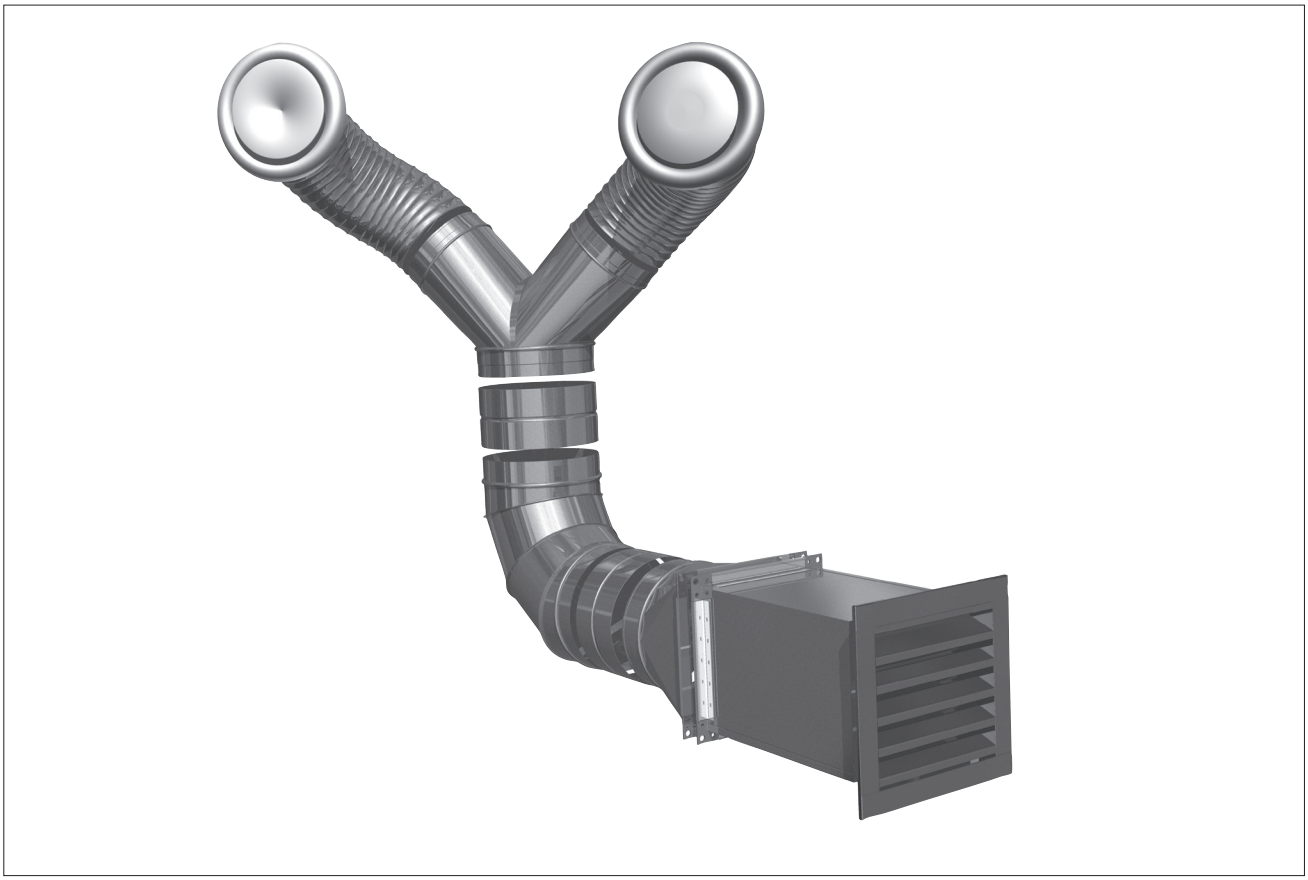

System description

ALNOR ventilation finish trim products include ventilation parts and hardware to make the ventilation system complete with air grilles, diffusers, air valves and air expansion boxes.

Dimensions

Most ventilation finish trim components have fasteners customized to standard round ventilation ducts. The trim elements are attached to the ducts either directly or via dedicated air boxes. All other sizes are shown in the tables and specifications in the individual Product Data Sheets.

Installation instructions

The installation method depends on the components to be used and it usually varies according to how the ductwork has been installed.

Application advantages

As a result of their aesthetic finish and ease of installation, the ventilation finish trim components are the way to add the right finishing touch. The components enable adjusting the air flow rate to change the air supply to the ventilated rooms for superior indoor comfort.

Marking

ALNOR products carry the Polish conformity mark B for construction products and Product codes as shown in the technical specifications listed in this catalogue.

ALNOR® ventilation systems
is a registered trademark protected by a technical patent. All modification rights reserved.

Wall diffuser
HHS

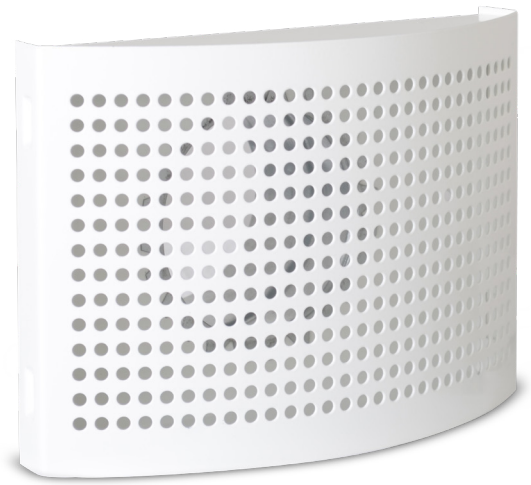

Description

HHS wall diffuser for fresh air supply. Male connector with gasket for fast connection with SPIRAL® duct. Powder painted with white RAL 9010 colour which provides additional protection from corrosion in places with high humidity, such as bathrooms.
An excellent choice when celling mounting is out of the scope or the interior design requires a wall diffuser. It can be used in offices, residential houses and mounted just under the ceiling as well.

Effective area: 0,008m²
Ø125 mm surface: 0,012m²



Front cover can be opened to make the maintenance and cleaning easier, and the perforation on it ensures even airflow.

Available materials - Product code examples
HHS-... - galvanized steel sheet, powder painted RAL9010

Product code example
Product code: **HHS - aaa**

type
Ød

Dimensions

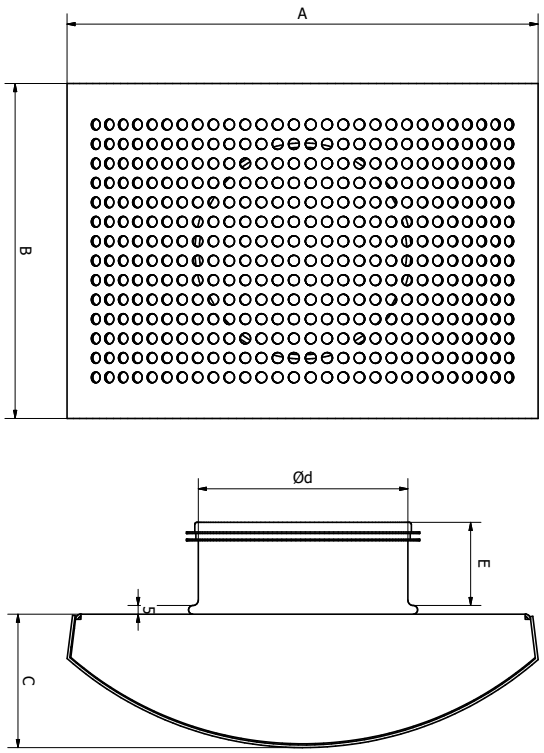

Product code	Ød [mm]	A [mm]	B [mm]	C [mm]	E [mm]
HHS-100	100	225	156	60	32
HHS-125	125	225	156	60	32

ALNOR® ventilation systems
is a registered trademark protected by a technical patent. All modification rights reserved.

Metal air exhaust valve

KW-RM



Description

KW air exhaust valves can be installed in the ceiling, on the wall, or directly in the mouth of a ventilation duct using a dedicated RM mounting frame. They allow smooth adjustment of the air exhaust flow rate by rotating the disk closure in the centre. The air flow rate depends on the opening ratio, i.e. the distance between the disk closure distance and the round bezel, and it is set with a locknut.
The carefully designed geometry of the valve guarantees low noise level as well as quick and easy installation.
The standard air exhaust valves are supplied with a mounting frame (Product code: KW-RM).

Colours: powder-coated, RAL 9016 high-gloss white — available for KW-RM
powder-coated, RAL 9010 high-gloss white — available for KW-RM-...-9010

Available materials — Product code examples
KW-RM - steel sheet, RAL 9016 powder-coated finish
KW-RM-...-9010 - steel sheet, RAL 9010 powder-coated finish (optional))

Product code example
Product code: **KW-RM - aaa**

type
Ød

Technical specifications

The following performance parameters:
volumetric flow rate, q (l/s or m^3/h), total pressure drop, P_t (Pa), and sound pressure level, L_A (dB(A)), can be read from the chart.
Pressure drop, P_t
The charts show the total pressure drop, P_t (Pa).
Sound pressure level, L_A
The charts show the sound pressure level, L_A (dB(A)).
The noise level is shown for the sound insulation level at 4 dB indoors, which corresponds to sound insulation performance in the reverberation zone at the room absorption level for 10 m^2 according to SABINE's formula.

Dimensions

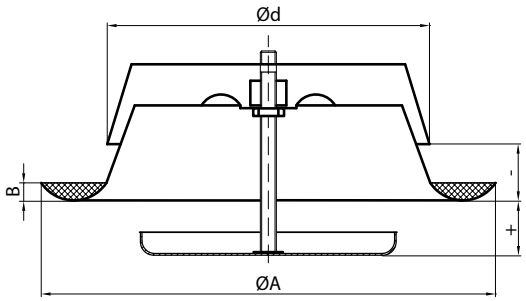

Ød = entry depth / internal diameter of a duct

$ØD_{nom}$ (mm)	A (mm)	B (mm)	Weight (kg)
80	115	12	0.1
100	137	12	0.2
125	164	12	0.3
150	202	12	0.3
160	212	12	0.5
200	248	12	0.7
250	302	12	0.9

Sound pressure level, L_A (dB(A))

Dimensions (mm)	Mean frequency (Hz)						
	125	250	500	1000	2000	4000	8000
80	-2	-6	-5	1	-1	-5	-14
100	-2	-4	-3	0	-1	-8	-16
125	4	3	1	-1	-3	-12	-22
160	-1	0	1	0	-4	-13	-26
200	0	-5	1	2	-13	-28	-32
250	1	-7	2	3	-15	-29	-33
tolerance	3	2	2	2	2	2	3

Sound insulation level (dB)

Dimensions (mm)	Mean frequency (Hz)							
	63	125	250	500	1000	2000	4000	8000
80	24	18	14	9	7	7	7	9
100	22	16	11	7	5	5	5	7
125	21	14	9	7	4	4	6	8
160	14	13	8	5	4	4	7	7
200	17	10	6	4	3	4	8	4
250	15	8	5	3	2	3	6	5
tolerance	6	3	2	2	2	2	2	3

ALNOR® ventilation systems
is a registered trademark protected by a technical patent. All modification rights reserved.

Insulated metal air exhaust valve
KWI



Description

KWI air exhaust valves can be installed in the ceiling, on the wall or directly in the mouth of a ventilation duct using a dedicated RMI mounting frame. They allow smooth adjustment of the air exhaust flow rate by rotating the disk closure in the centre. The air flow rate depends on the opening ratio, i.e. the distance between the disk closure distance and the round bezel, and it is set with a locknut. The carefully designed geometry of the valve guarantees low noise level as well as quick and easy installation.
Depending on the installation needs, the air exhaust valves are available in sets with a mounting frame (product code: KWI-RMI).

Standard colour: white

Available materials — Product code examples
KWI-RMI-... - galvanized steel sheet, powder-coated finish high-gloss RAL 9016

Product code example
Product code: **KWI-RMI - aaa**

type
Ød

Technical specifications

The following performance parameters:
volumetric flow rate, q (l/s or m³/h), total pressure drop, P_t (Pa), and sound pressure level, L_A (dB(A)), can be read from the chart.

Pressure drop, P_t
The charts show the total pressure drop, P_t (Pa).

Sound pressure level, L_A
The charts show the sound pressure level, L_A (dB(A)).
The noise level is shown for the sound insulation level at 4 dB indoors, which corresponds to sound insulation performance in the reverberation zone at the room absorption level for 10 m² according to SABINE's formula.

Dimensions

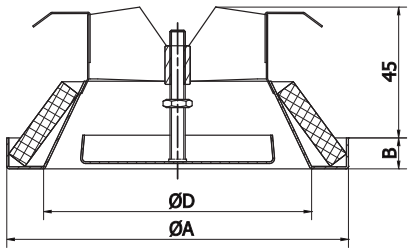

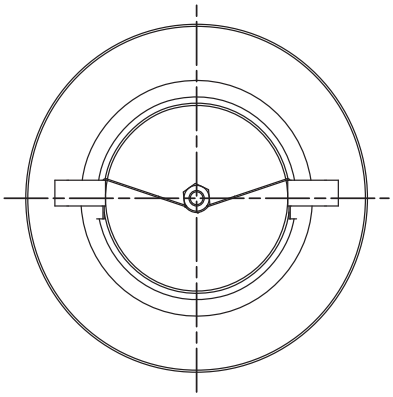

$ØD_{nom}$ (mm)	ØA (mm)	B (mm)	Weight (kg)
80	108	16	0.1
100	137	16	0.2
125	162	16	0.3
160	193	16	0.5
200	240	19	0.7

Sound pressure level, L_A (dB(A))

Dimensions (mm)	Mean frequency (Hz)						
	125	250	500	1000	2000	4000	8000
80	-2	-6	-5	1	-1	-5	-14
100	-2	-4	-3	0	-1	-8	-16
125	4	3	1	-1	-3	-12	-22
160	-1	0	1	0	-4	-13	-26
200	0	-5	1	2	-13	-28	-32
tolerance	3	2	2	2	2	2	3

Sound insulation level (dB)

Dimensions (mm)	Mean frequency (Hz)							
	63	125	250	500	1000	2000	4000	8000
80	24	18	14	9	7	7	7	9
100	22	16	11	7	5	5	5	7
125	21	14	9	7	4	4	6	8
160	14	13	8	5	4	4	7	7
200	17	10	6	4	3	4	8	4
tolerance	6	3	2	2	2	2	2	3

ALNOR® ventilation systems
is a registered trademark protected by a technical patent. All modification rights reserved.

Stainless steel air exhaust valve

KW-K-RM



Description

KW-K air exhaust valves can be installed in the ceiling, on the wall or directly in the mouth of a ventilation duct using a dedicated RM mounting frame. They allow smooth adjustment of the air exhaust flow rate by rotating the disk closure in the centre.
The air flow rate depends on the opening ratio, i.e. the distance between the disk closure distance and the round bezel, and it is set with a locknut.
The carefully designed geometry of the valve guarantees low noise level as well as quick and easy installation.
The standard air exhaust valves are supplied with a mounting frame (product code: KW-K-RM).

Available materials — Product code examples
KW-K-...- 1.4301/304 stainless steel sheet
Product code example
Product code: **KW-K-RM - aaa**

type
Ød

Technical specifications

The following performance parameters:
volumetric flow rate, q (l/s or m^3/h), total pressure drop, P_t (Pa), and sound pressure level, L_A (dB(A)), for a specific disk closure depth can be read from the chart.

Pressure drop, P_t
The charts show the total pressure drop, P_t (Pa).

Sound pressure level, L_A
The charts show the sound pressure level, L_A (dB(A)).
The noise level is shown for the sound insulation level at 4 dB indoors, which corresponds to sound insulation performance in the reverberation zone at the room absorption level for 10 m^2 according to SABINE's formula.

Dimensions

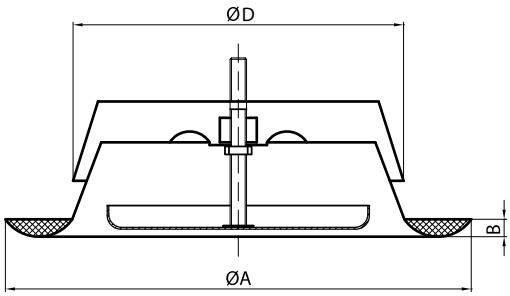

$ØD_{nom}$ (mm)	ØA (mm)	B (mm)	Weight (kg)
80	115	12	0.15
100	137	12	0.19
125	164	12	0.31
150	202	12	0.35
160	212	12	0.47
200	248	12	0.66

Sound pressure level, L_A (dB(A))

Dimensions (mm)	Mean frequency (Hz)						
	125	250	500	1000	2000	4000	8000
80	-2	-6	-5	1	-1	-5	-14
100	4	3	2	0	-7	-15	-30
125	2	7	3	-2	-10	-20	-32
150	3	7	3	-2	-10	-20	-32
160	5	7	3	-2	-10	-19	-32
200	8	6	4	-3	-10	-19	-32
tolerance	3	2	2	2	2	2	3

Sound insulation level (dB)

Dimensions (mm)	Mean frequency (Hz)							
	63	125	250	500	1000	2000	4000	8000
80	26	18	14	10	8	8	6	9
100	22	16	11	8	6	6	3	6
125	20	15	9	6	4	3	3	5
150	19	15	9	6	4	3	4	5
160	18	13	8	5	4	4	5	6
200	17	11	7	6	6	5	6	6
tolerance	6	3	2	2	2	2	2	3

ALNOR® ventilation systems
is a registered trademark protected by a technical patent. All modification rights reserved.

Stainless steel air exhaust valve

KW-RM, KWI, KW-K-RM

Technical specifications

Selection charts

disk closure depth (mm)

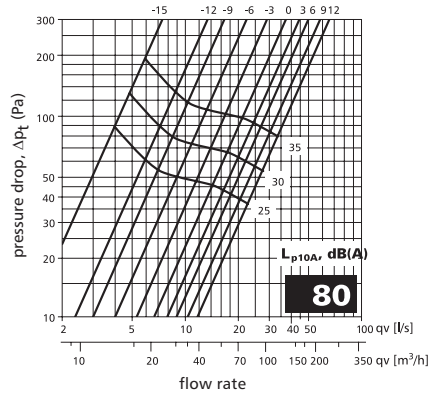

disk closure depth (mm)

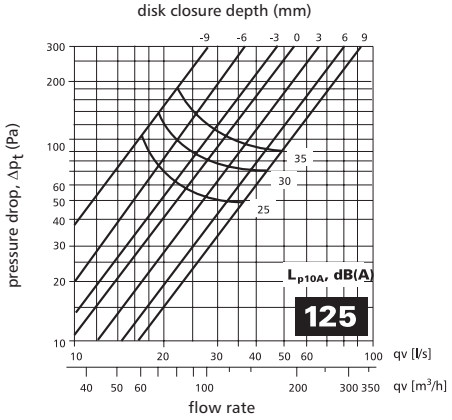

disk closure depth (mm)

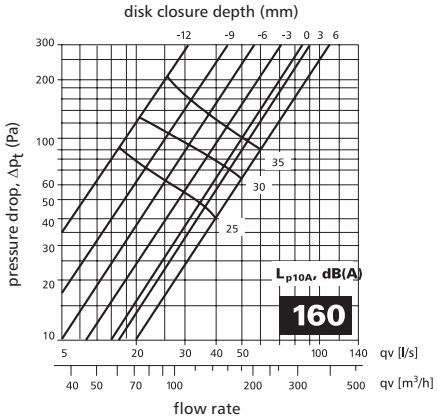

disk closure depth (mm)

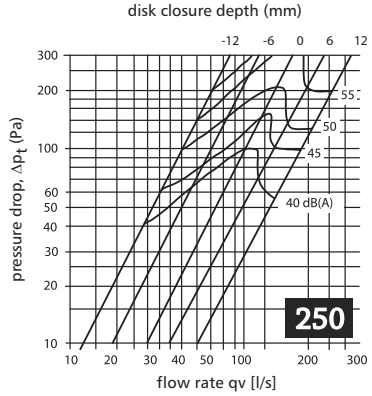

disk closure depth (mm)

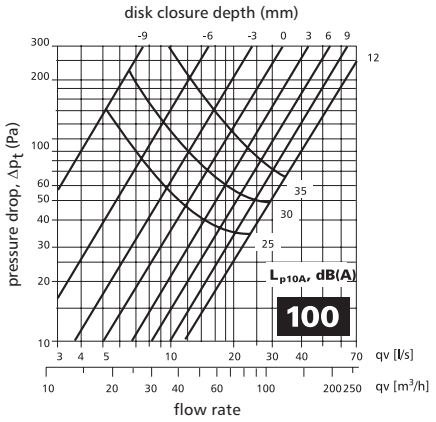

disk closure depth (mm)

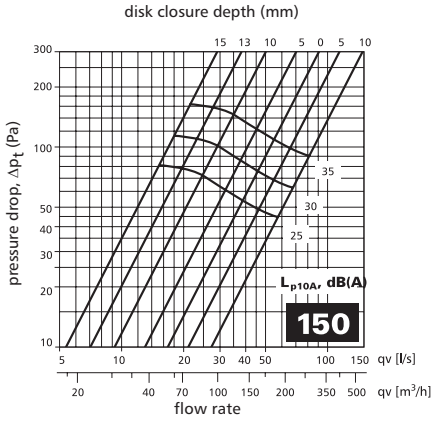

disk closure depth (mm)

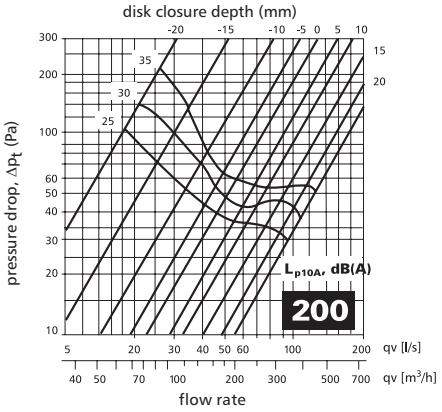

ALNOR® ventilation systems
is a registered trademark protected by a technical patent. All modification rights reserved.

Metal air exhaust valve

KWO-RML

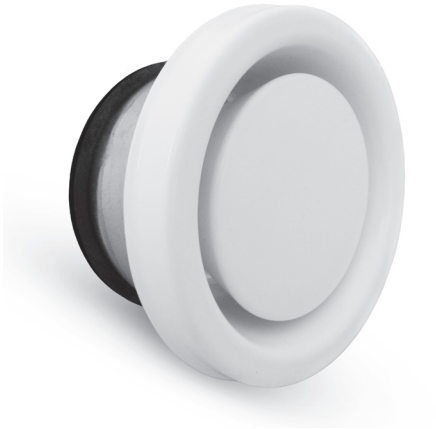

Description

KWO air exhaust valves can be installed in the ceiling, on the wall or directly in the mouth of a ventilation duct using a dedicated RML sealed mounting frame. They allow smooth adjustment of the air exhaust flow rate by rotating the disk closure in the centre. The air flow rate depends on the opening ratio, i.e. the distance between the disk closure distance and the round bezel, and it is set with a locknut. The carefully designed geometry of the valve guarantees low noise level as well as quick and easy installation.
The standard air exhaust valves are supplied with a sealed mounting frame (product code: KWO-RML).

Available materials — Product code examples
KWO-RML-... - galvanized steel sheet, powder-coated finish high-gloss RAL 9016

Product code example
Product code: **KWO-RML - aaa**

type
Ød

Technical specifications

The following performance parameters:
volumetric flow rate, q (l/s or m^3/h), total pressure drop, P_t (Pa), and sound pressure level, L_A (dB(A)), can be read from the chart.

Pressure drop, P_t
The charts show the total pressure drop, P_t (Pa).

Sound pressure level, L_A
The charts show the sound pressure level, L_A (dB(A)).
The noise level is shown for the sound insulation level at 4 dB indoors, which corresponds to sound insulation performance in the reverberation zone at the room absorption level for 10 m^2 according to SABINE's formula.

Dimensions

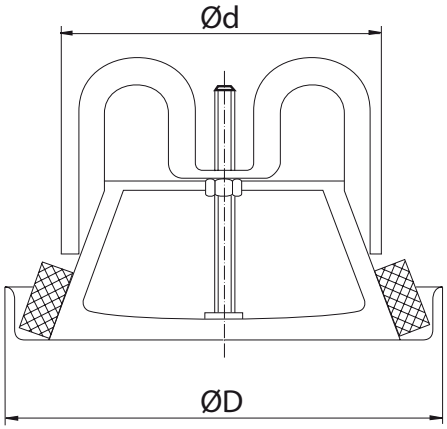

$ØD_{nom}$ (mm)	ØA (mm)	Weight (kg)
100	130	0.3
125	160	0.4
160	190	0.5
200	235	0.8

Sound pressure level, L_A (dB(A))

Dimensions (mm)	Mean frequency (Hz))						
	125	250	500	1000	2000	4000	8000
100	-6	-3	-3	-4	-9	-13	-27
125	-7	-6	-5	-8	-4	-12	-28
160	-3	-7	-5	-2	-12	-16	-29
200	-5	-7	-8	-2	-9	-13	-30
tolerance	3	2	2	2	2	2	3

Sound insulation level (dB)

Dimensions (mm)	Mean frequency (Hz)							
	63	125	250	500	1000	2000	4000	8000
100	23	18	14	12	12	14	5	6
125	21	17	12	11	12	11	7	6
160	19	14	12	11	11	14	5	7
200	15	13	11	11	13	12	7	7
tolerance	6	3	2	2	2	2	2	3

ALNOR® ventilation systems
is a registered trademark protected by a technical patent. All modification rights reserved.

Metal air exhaust valve

KWO-RML

Technical specifications

Selection charts

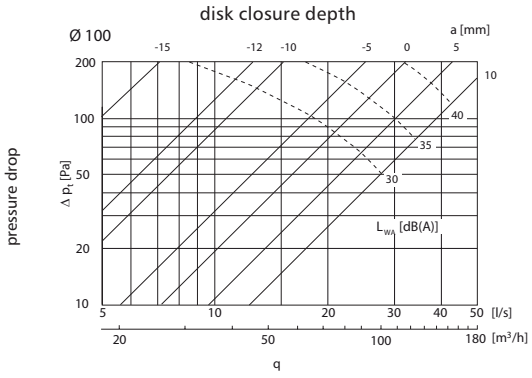

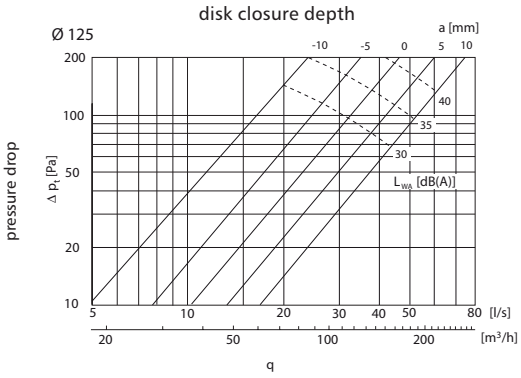

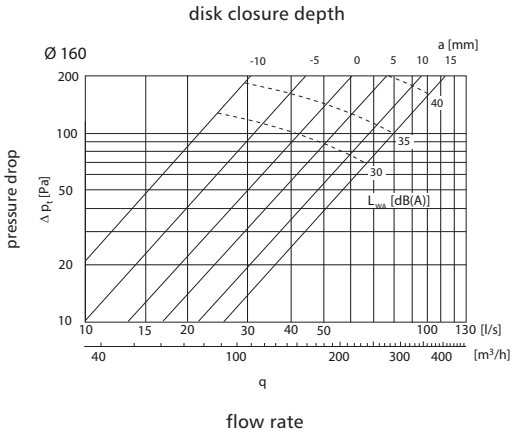

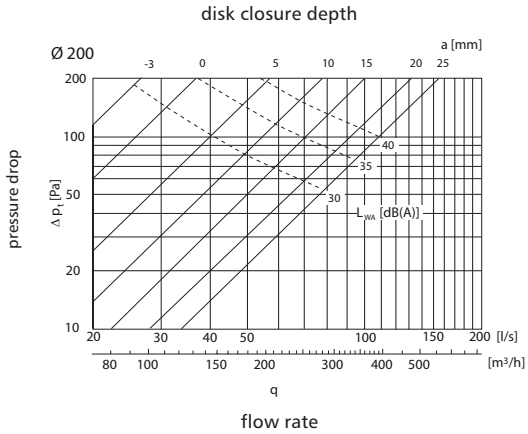

ALNOR® ventilation systems
is a registered trademark protected by a technical patent. All modification rights reserved.

Metal air exhaust valve

KWV-RM



Description

KWV air exhaust valves can be installed in the ceiling, on the wall or directly in the mouth of a ventilation duct using a dedicated RM mounting frame. They allow smooth adjustment of the air exhaust flow rate by rotating the disk closure in the centre. The air flow rate depends on the opening ratio, i.e. the distance between the disk closure distance and the round bezel, and it is set with a locknut. The carefully designed geometry of the valve guarantees low noise level as well as quick and easy installation.

Available materials — Product code examples
KWV-RM-... - steel sheet, powder-coated finish
high-gloss RAL 9016

Product code example
Product code: **KWV-RM - aaa**

type
Ød

Technical specifications

The following performance parameters:
volumetric flow rate, q (l/s or m^3/h), total pressure drop, P_t (Pa), and sound pressure level, L_A (dB(A)), can be read from the chart.

Pressure drop, P_t
The charts show the total pressure drop, P_t (Pa).

Sound pressure level, L_A
The charts show the sound pressure level, L_A (dB(A)).
The noise level is shown for the sound insulation level at 4 dB indoors, which corresponds to sound insulation performance in the reverberation zone at the room absorption level for 10 m^2 according to SABINE's formula.

Dimensions

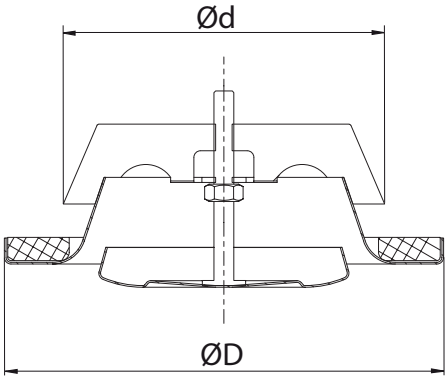

$ØD_{nom}$ (mm)	ØA (mm)	Weight (kg)
80	111	0.2
100	131	0.3
125	161	0.4
160	204	0.5
200	244	0.8

Sound pressure level, L_A (dB(A))

Dimensions (mm)	Mean frequency (Hz)						
	125	250	500	1000	2000	4000	8000
80	-2	-6	-5	1	-1	-5	-14
100	-2	-4	-3	0	-1	-8	-16
125	4	3	1	-1	-3	-12	-22
160	-1	0	1	0	-4	-13	-26
200	0	-5	1	2	-13	-28	-32
tolerance	3	2	2	2	2	2	3

Sound insulation level (dB)

Dimensions (mm)	Mean frequency (Hz)							
	63	125	250	500	1000	2000	4000	8000
80	24	18	14	9	7	7	7	9
100	22	16	11	7	5	5	5	7
125	21	14	9	7	4	4	6	8
160	14	13	8	5	4	4	7	7
200	17	10	6	4	3	4	8	4
tolerance	6	3	2	2	2	2	2	3

ALNOR® ventilation systems
is a registered trademark protected by a technical patent. All modification rights reserved.

Metal air exhaust valve

KWV-RM

Technical specifications

Selection charts

KWV-80

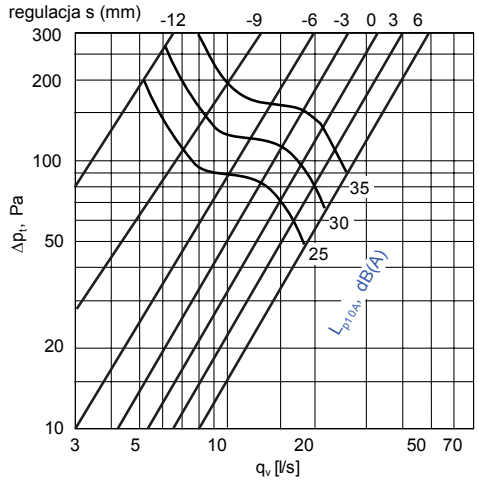

KWV-100

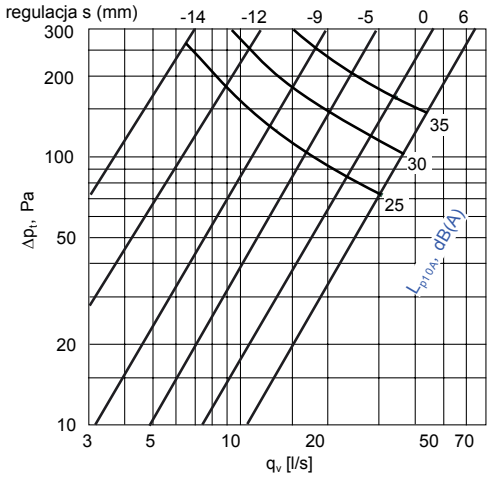

KWV-125

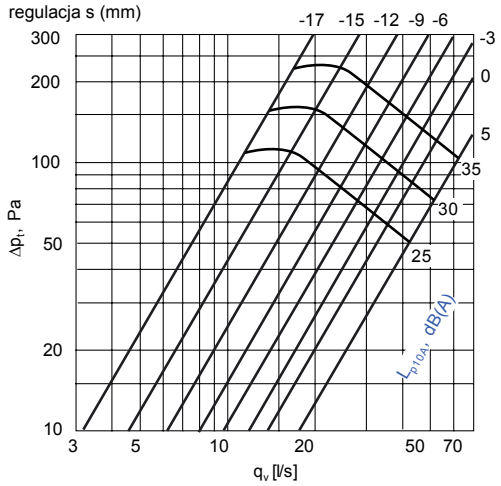

KWV-160

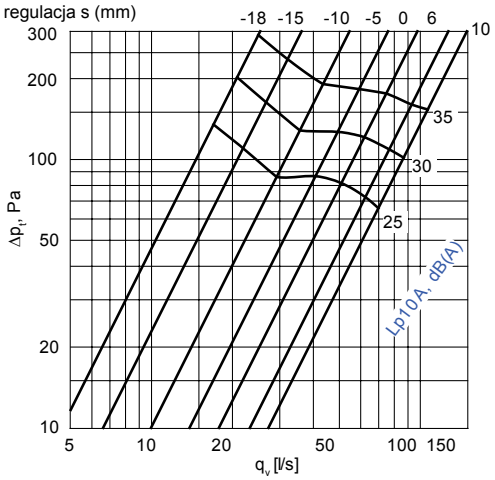

KWV-200

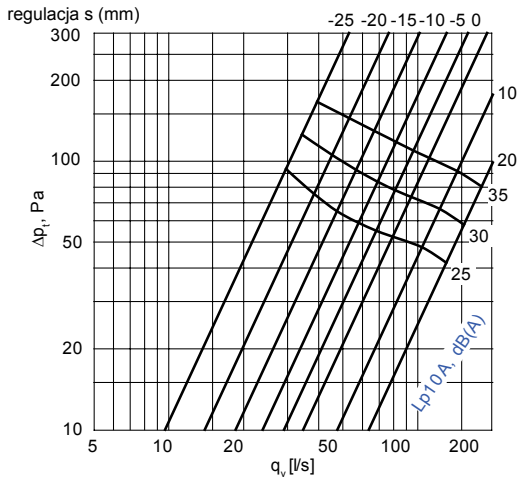

ALNOR® ventilation systems
is a registered trademark protected by a technical patent. All modification rights reserved.

Insulated metal air supply valve
KNI



Description

KNI air supply valves can be installed in the ceiling, on the wall or directly in the mouth of a ventilation duct using a dedicated RM mounting frame. They allow smooth adjustment of the air exhaust flow rate by rotating the disk closure in the centre. The air flow rate depends on the opening ratio, i.e. the distance between the disk closure distance and the round bezel, and it is set with a locknut. The carefully designed geometry of the valve guarantees low noise level as well as quick and easy installation.
The air supply valves are available in sets with a mounting frame (product code: KNI-RMI).

Available materials — Product code examples
KNI-RMI-... - galvanized steel sheet, powder-coated finish high-gloss RAL 9016

Product code example
Product code: **KNI-RMI - aaa**

type
Ød

Technical specifications

The following performance parameters:
volumetric flow rate, q (l/s or m^3/h), total pressure drop, P_t (Pa), and sound pressure level, L_A (dB(A)), for a specific disk closure depth can be read from the chart.

Pressure drop, P_t
The charts show the total pressure drop, P_t (Pa).

Sound pressure level, L_A
The charts show the sound pressure level, L_A (dB(A)).
The noise level is shown for the sound insulation level at 4 dB indoors, which corresponds to sound insulation performance in the reverberation zone at the room absorption level for 10 m^2 according to SABINE's formula

Dimensions

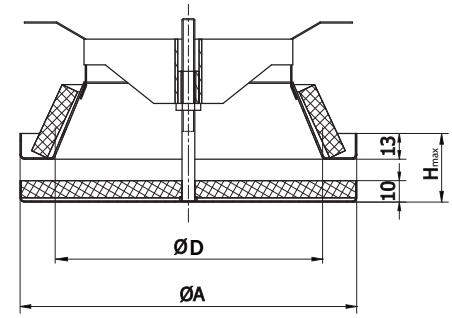

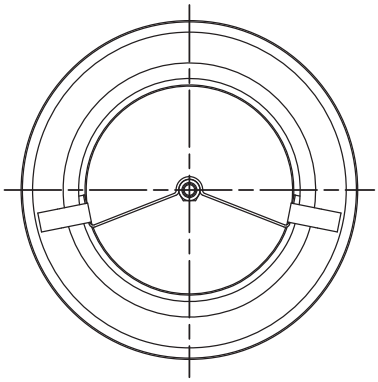

ØD$_{nom}$ (mm)	ØA (mm)	H_{max} (mm)	Weight (kg)
80	115	45	0.19
100	137	45	0.26
125	164	45	0.33
160	212	45	0.48
200	248	45	0.65

Sound pressure level, L_A (dB(A))

Dimensions (mm)	Mean frequency (Hz)						
	125	250	500	1000	2000	4000	8000
80	6	3	2	1	-4	-16	-20
100	4	3	2	0	-7	-15	-30
125	2	7	3	-2	-10	-20	-32
160	5	7	3	-2	-10	-19	-32
200	8	6	4	-3	-10	-19	-32
tolerance	3	2	2	2	2	2	3

Sound insulation level (dB)

Dimensions (mm)	Mean frequency (Hz)							
	63	125	250	500	1000	2000	4000	8000
80	22	19	14	11	2	3	7	8
100	22	16	11	8	6	6	3	6
125	20	15	9	6	4	3	3	5
160	18	13	8	5	4	4	5	6
200	17	11	7	6	6	5	6	6
tolerance	6	3	2	2	2	2	2	3

ALNOR® ventilation systems
is a registered trademark protected by a technical patent. All modification rights reserved.

Technical specifications

Selection charts

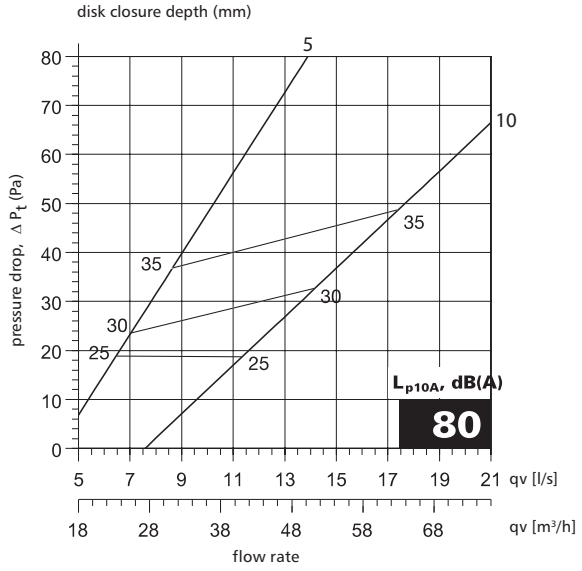

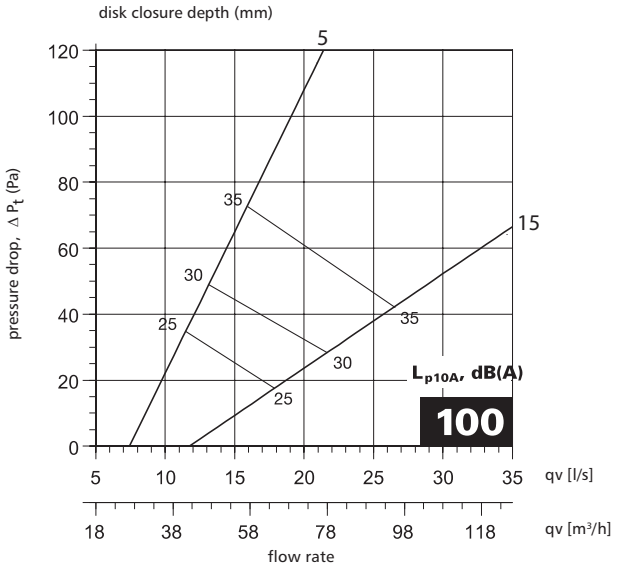

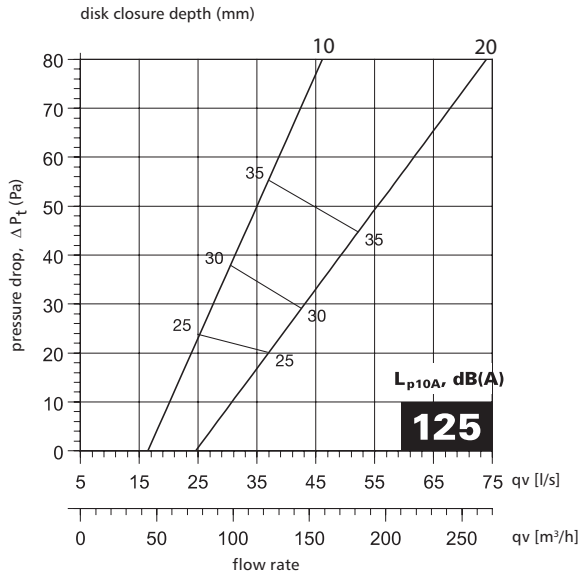

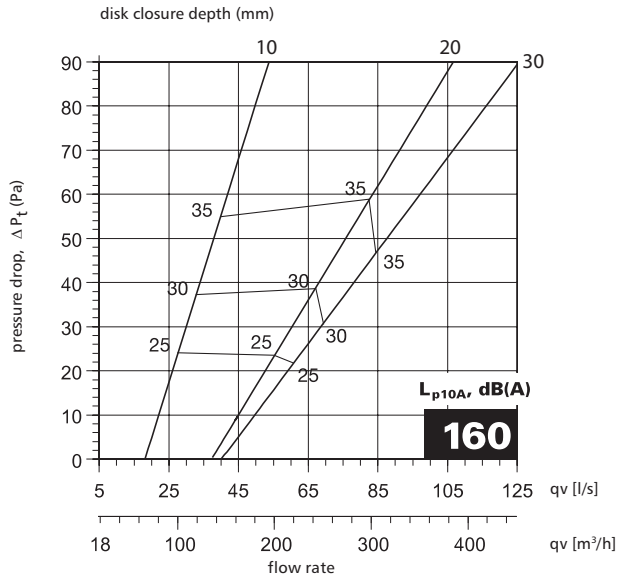

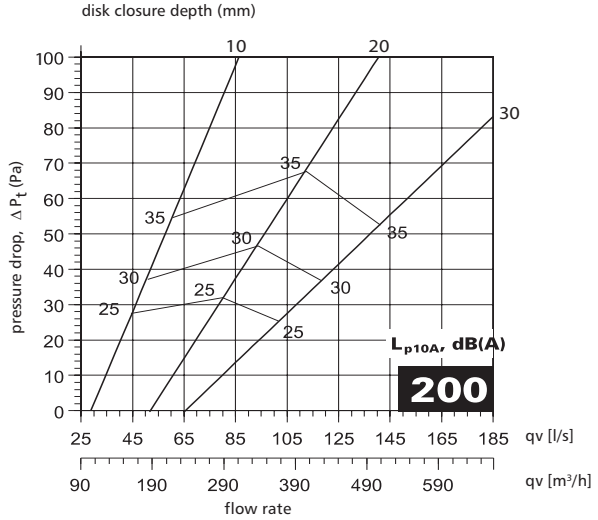

ALNOR® ventilation systems
is a registered trademark protected by a technical patent. All modification rights reserved.

Metal air supply valve

KNV-RM



Description

KNV air supply valves can be installed in the ceiling, on the wall or directly in the mouth of a ventilation duct using a dedicated RM mounting frame. They allow smooth adjustment of the air exhaust flow rate by rotating the disk closure in the centre. The air flow rate depends on the opening ratio, i.e. the distance between the disk closure distance and the round bezel, and it is set with a locknut. The carefully designed geometry of the valve guarantees low noise level as well as quick and easy installation.

Available materials — Product code examples
KNV-RM-... - steel sheet, powder-coated finish
high-gloss RAL 9016

Product code example
Product code: **KNV-RM - aaa**

type
Ød

Technical specifications

The following performance parameters:
volumetric flow rate, q (l/s or m^3/h), total pressure drop, P_t (Pa), and sound pressure level, L_A (dB(A)), can be read from the chart.

Pressure drop, P_t
The charts show the total pressure drop, P_t (Pa).

Sound pressure level, L_A
The charts show the sound pressure level, L_A (dB(A)).
The noise level is shown for the sound insulation level at 4 dB indoors, which corresponds to sound insulation performance in the reverberation zone at the room absorption level for 10 m^2 according to SABINE's formula.

Dimensions

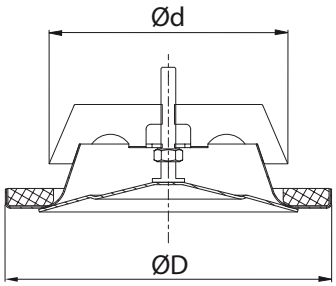

Ød (mm)	ØD (mm)	Weight (kg)
80	111	0.15
100	109	0.28
125	131	0.44
160	170	0.62
200	206	0.75

Sound pressure level, L_A (dB(A))

Dimensions (mm)	Mean frequency (Hz)						
	125	250	500	1000	2000	4000	8000
100	-6	-2	-3	-5	-8	-9	-15
125	0	1	-1	-5	-15	-21	-33
160	3	2	-1	-6	-15	-23	-36
tolerance	3	2	2	2	2	2	3

Sound insulation level (dB)

Dimensions (mm)	Mean frequency (Hz)							
	63	125	250	500	1000	2000	4000	8000
100	22	18	13	11	9	8	7	8
125	20	16	11	9	9	7	6	5
160	18	14	10	9	9	7	6	6
tolerance	6	3	2	2	2	2	2	3

ALNOR® ventilation systems
is a registered trademark protected by a technical patent. All modification rights reserved.

Metal air supply valve

KNV-RM

Technical specifications

Selection charts

KNV-80

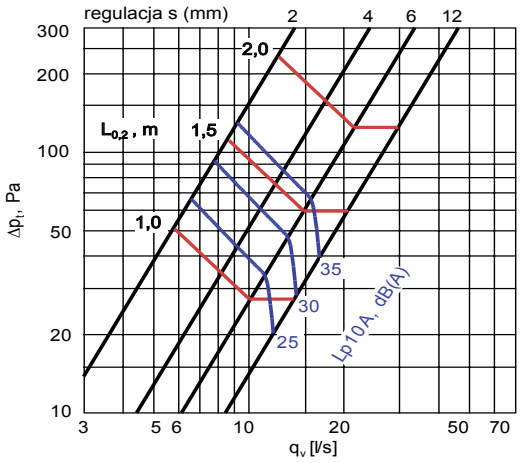

KNV-100

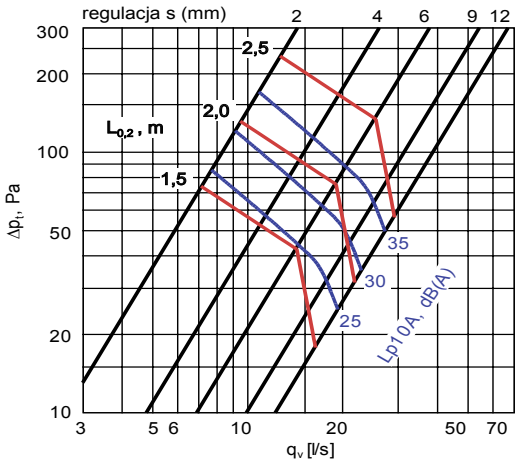

KNV-125

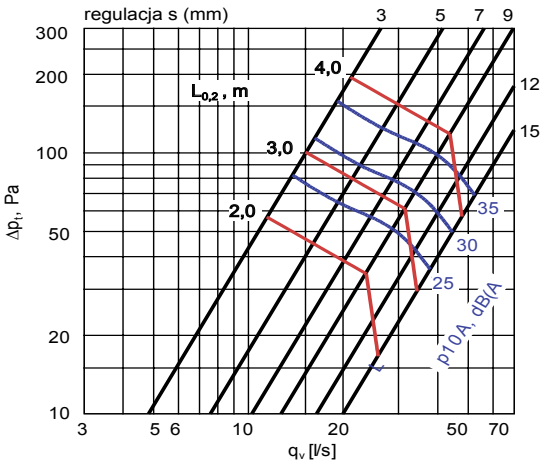

KNV-160

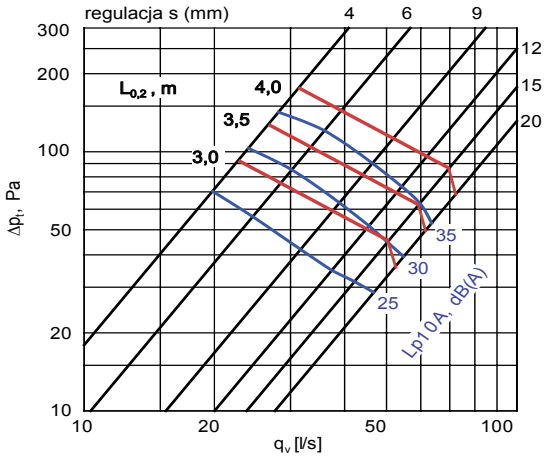

KNV-200

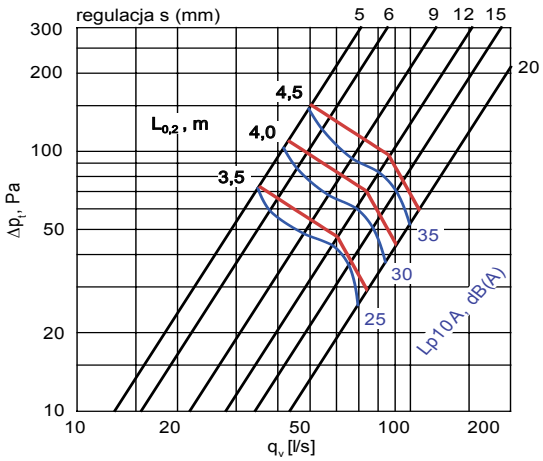

ALNOR® ventilation systems
is a registered trademark protected by a technical patent. All modification rights reserved.

Metal air supply valve

KN-RM



Description

KN air supply valves can be installed in the ceiling, on the wall or directly in the mouth of a ventilation duct using a dedicated RM mounting frame. They allow smooth adjustment of the air exhaust flow rate by rotating the disk closure in the centre. The air supply flow depends on the disk closure distance from the round bezel
and it is set with a locknut. The carefully designed geometry of the valve
guarantees low noise level as well as quick and easy installation. The standard air supply valves are supplied with a mounting frame (product code: KN-RM).

Material: steel sheet

Available materials - Product code examples

KN-RM-... - steel sheet, powder-coated finish high-gloss RAL 9016 white

KN-RM-...- 9010 - teel sheet, powder-coated finish high-gloss RAL 9010 white

Product code example

Product code: **KN-RM - aaa**

type

Ød

Technical specifications

The following performance parameters:
volumetric flow rate, q (l/s or m³/h), total pressure drop, P_t (Pa), and sound pressure level, L_A (dB(A)), can be read from the chart.

Pressure drop, P_t
The charts show the total pressure drop, P_t (Pa).

Sound pressure level, L_A
The charts show the sound pressure level, L_A (dB(A)).
The noise level is shown for the sound insulation level at 4 dB indoors, which corresponds to sound insulation performance in the reverberation zone at the room absorption level for 10 m² according to SABINE's formula.

Dimensions

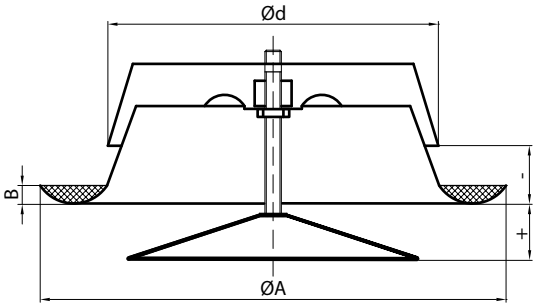

$ØD_{nom}$ (mm)	ØA (mm)	B (mm)	Weight (kg)
80	115	12	0.15
100	137	12	0.19
125	164	12	0.31
150	202	12	0.35
160	212	12	0.47
200	248	12	0.66
250	302	12	0.88

Sound pressure level, L_A (dB(A))

Dimensions (mm)	Mean frequency (Hz)						
	125	250	500	1000	2000	4000	8000
80	6	3	2	1	-4	-16	-20
100	4	3	2	0	-7	-15	-30
125	2	7	3	-2	-10	-20	-32
160	5	7	3	-2	-10	-19	-32
200	8	6	4	-3	-10	-19	-32
250	9	8	6	-4	-12	-20	-33
tolerance	3	2	2	2	2	2	3

Sound insulation level (dB)

Dimensions (mm)	Mean frequency (Hz)							
	63	125	250	500	1000	2000	4000	8000
80	22	19	14	11	2	3	7	8
100	22	16	11	8	6	6	3	6
125	20	15	9	6	4	3	3	5
160	18	13	8	5	4	4	5	6
200	17	11	7	6	6	5	6	6
250	18	12	9	7	7	6	7	5
tolerance	6	3	2	2	2	2	2	3

ALNOR® ventilation systems
is a registered trademark protected by a technical patent. All modification rights reserved.

Stainless steel air supply valve

KN-K-RM



Description

KN-K air supply valves can be installed in the ceiling, on the wall or directly in the mouth of a ventilation duct using a dedicated RM mounting frame. They allow smooth adjustment of the air exhaust flow rate by rotating the disk closure in the centre. The air flow rate depends on the opening ratio, i.e. the distance between the disk closure distance and the round bezel, and it is set with a locknut. The carefully designed geometry of the valve guarantees low noise level as well as quick and easy installation.
The standard air supply valves are supplied with a mounting frame (product code: KN-K-RM).

Available materials - Product code examples
KN-K-RM-... - 1.4301/304 stainless steel sheet

Product code example
Product code: **KN-K-RM - aaa**

type
Ød

Technical specifications

The following performance parameters:
volumetric flow rate, q (l/s or m^3/h), total pressure drop, P_t (Pa), and sound pressure level, L_A (dB(A)), for a specific disk closure depth can be read from the chart.

Pressure drop, P_t
The charts show the total pressure drop, P_t (Pa).

Sound pressure level, L_A
The charts show the sound pressure level, L_A (dB(A)).
The noise level is shown for the sound insulation level at 4 dB indoors, which corresponds to sound insulation performance in the reverberation zone at the room absorption level for 10 m^2 according to SABINE's formula.

Adjustment
See the user's manual for the air flow adjustment data.

Dimensions

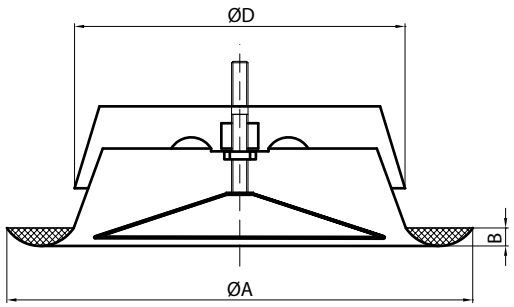

$ØD_{nom}$ (mm)	ØA (mm)	B (mm)	Weight (kg)
80	115	12	0.15
100	137	12	0.19
125	164	12	0.31
150	202	12	0.35
160	212	12	0.47
200	248	12	0.66

Sound pressure level, L_A (dB(A))

Dimensions (mm)	Mean frequency (Hz)						
	125	250	500	1000	2000	4000	8000
80	6	4	3	-1	-5	-10	-27
100	4	3	2	0	-7	-15	-30
125	2	7	3	-2	-10	-20	-32
160	3	7	3	-2	-10	-21	-32
160	5	7	3	-2	-10	-19	-32
200	8	6	4	-3	-10	-19	-32
tolerance	3	2	2	2	2	2	3

Sound insulation level (dB)

Dimensions (mm)	Mean frequency (Hz)							
	63	125	250	500	1000	2000	4000	8000
80	21	13	11	9	7	7	4	6
100	22	16	11	8	6	6	3	6
125	20	15	9	6	4	3	3	5
150	19	14	8	6	4	3	3	6
160	18	13	8	5	4	4	5	6
200	17	11	7	6	6	5	6	6
tolerance	6	3	2	2	2	2	2	3

ALNOR® ventilation systems
is a registered trademark protected by a technical patent. All modification rights reserved.

Air supply valve

KN-RM, KN-K-RM

Technical specifications

Selection charts

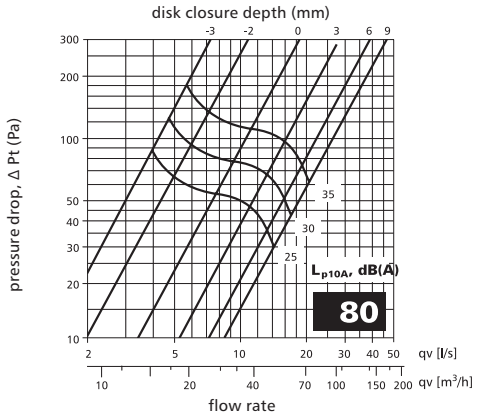

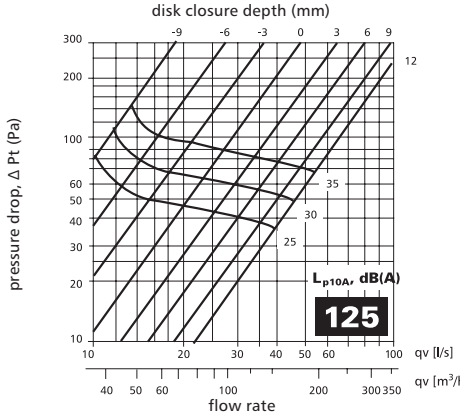

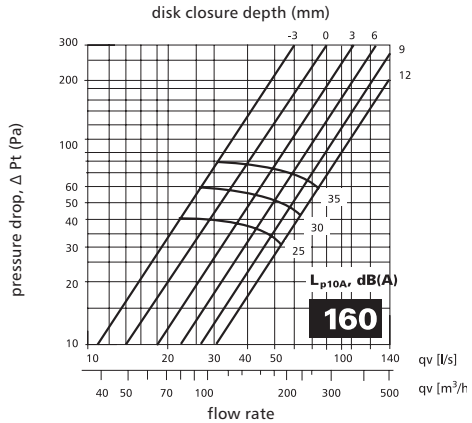

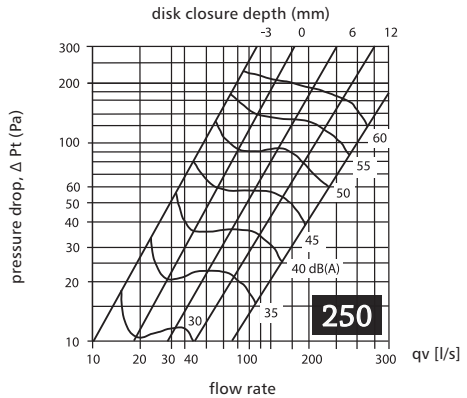

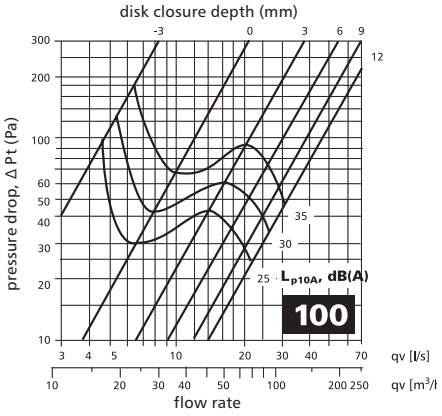

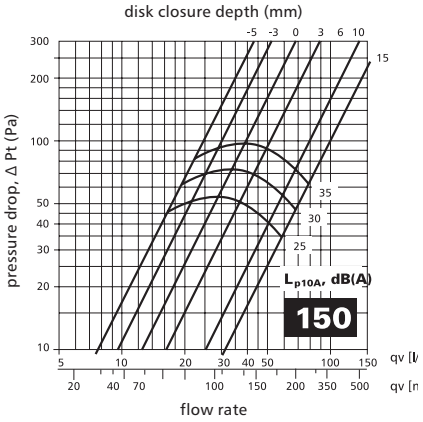

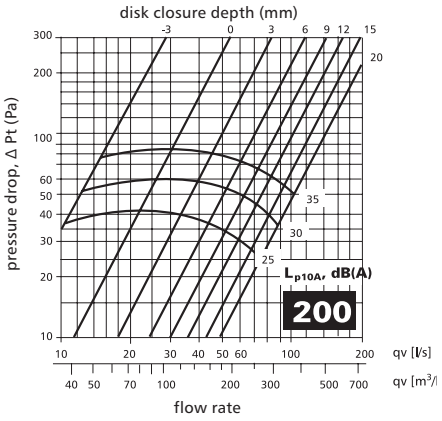

ALNOR® ventilation systems
is a registered trademark protected by a technical patent. All modification rights reserved.

Metal air supply valve

KNT-RML



Description

KNT air supply valves can be installed in the ceiling, on the wall or directly in the mouth of a ventilation duct using a dedicated RML mounting frame. They allow smooth adjustment of the air exhaust flow rate by rotating the disk closure in the centre. The air flow rate depends on the opening ratio, i.e. the distance between the disk closure distance and the round bezel, and it is set with a locknut. The carefully designed geometry of the valve guarantees low noise level as well as quick and easy installation.
On the inside of the KNT valve, there is a deflector to control the air flow angle.



The standard air supply valves are supplied with a mounting frame (product code: KNT-RML).

Available materials — Product code examples
KNT-RML-...- galvanized steel sheet, powder-coated finish high-gloss RAL 9016

Product code example
Product code: **KNT-RML - aaa**

type
Ød

Dimensions

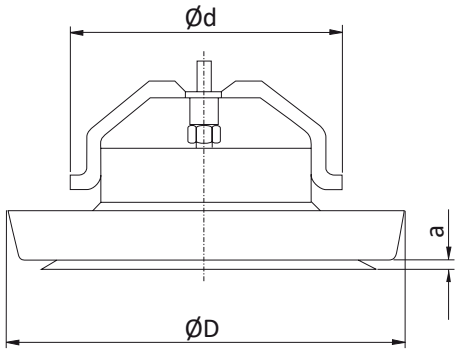

Ød (mm)	ØD (mm)	Weight (kg)
100	135	0.28
125	165	0.44
160	205	0.62

Technical specifications

Sound pressure level, LA (dB(A))

Dimensions (mm)	Mean frequency (Hz)						
	125	250	500	1000	2000	4000	8000
100	-6	-2	-3	-5	-8	-9	-15
125	0	1	-1	-5	-15	-21	-33
160	3	2	-1	-6	-15	-23	-36
tolerance	3	2	2	2	2	2	3

Sound insulation level (dB)

Dimensions (mm)	Mean frequency (Hz)							
	63	125	250	500	1000	2000	4000	8000
100	22	18	13	11	9	8	7	8
125	20	16	11	9	9	7	6	5
160	18	14	10	9	9	7	6	6
tolerance	6	3	2	2	2	2	2	3

ALNOR® ventilation systems
is a registered trademark protected by a technical patent. All modification rights reserved.

Metal air supply valve

KNT-RML

Technical specifications

The following performance parameters:
volumetric flow rate, q (l/s or m³/h), total pressure drop, P_t (Pa), and sound pressure level, L_A (dB(A)), can be read from the chart.

Pressure drop, P_t
The charts show the total pressure drop, P_t (Pa).

Sound pressure level, L_A
The charts show the sound pressure level, L_A (dB(A)).
The noise level is shown for the sound insulation level at 4 dB indoors, which corresponds to sound insulation performance in the reverberation zone at the room absorption level for 10 m² according to SABINE's formula.

Selection charts for air valves w/o deflectors

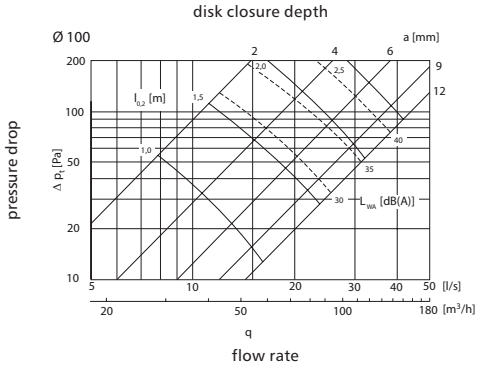

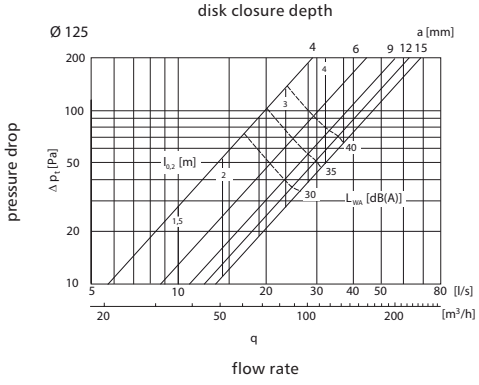

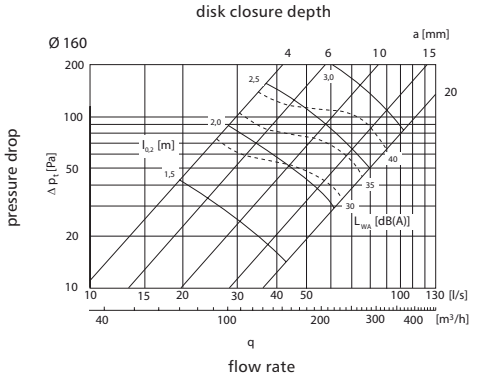

Selection charts for air valves with deflectors

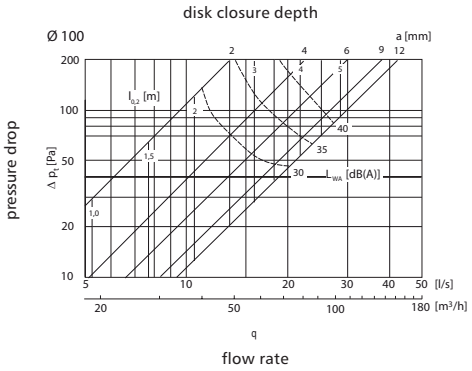

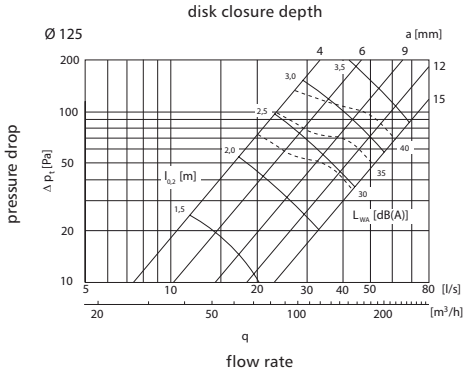

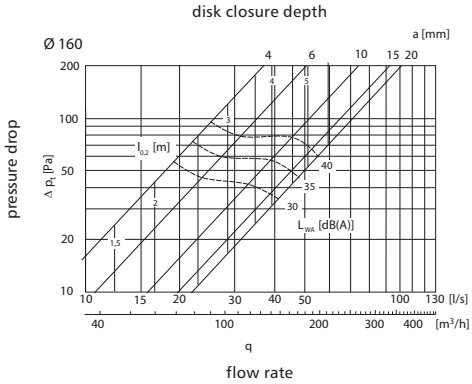

ALNOR® ventilation systems
is a registered trademark protected by a technical patent. All modification rights reserved.

Mounting frame for air supply and exhaust valves
RM



Description

RM mounting frames have an inward sleeve with coil-thread embossing to screw in a KN-series air supply valve or a KW-series air exhaust valve. The mounting frame diameter is a male fitting for direct insertion into a spiral duct, a flexible sonoduct or an aluduct, and a BPFL female bend.

Available materials — Product code examples
RM-... - galvanized steel sheet
RM-K-... - 1.4301/304 stainless steel sheet
RM-K-... -316L - 1.4404/316L stainless steel sheet

Product code example
Product code: **RM - aaa**

type
Ød

Dimensions

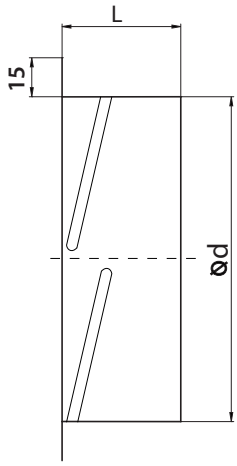

$Ød_{nom}$ (mm)	L (mm)	Weight (kg)
80	50	0.04
100	50	0.05
125	50	0.07
150	50	0.09
160	50	0.10
200	50	0.14
250	50	0.18

ALNOR® ventilation systems
is a registered trademark protected by a technical patent. All modification rights reserved.

Sealed long mounting frame for air valves

RML



Description

RML sealed long frames are designed similarly to the RM mounting frames to accommodate an air supply or exhaust valve. The seal provides air tightness class D according to PN-EN-12237.

Available materials — Product code examples

RML-... - galvanized steel sheet
RML-K-... - 1.4301/304 stainless steel sheet
RML-K-... -316L - 1.4404/316L stainless steel sheet

Product code example

Product code: **RML - aaa**

type
Ød

Dimensions

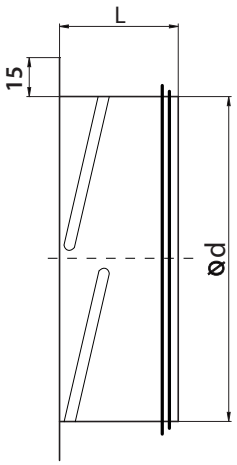

$Ød_{nom}$ (mm)	L (mm)	Weight (kg)
80	50	0.04
100	50	0.05
125	50	0.07
150	50	0.09
160	50	0.10
200	50	0.14
250	50	0.18

ALNOR® ventilation systems
is a registered trademark protected by a technical patent. All modification rights reserved.

Mounting frames for KNI and KWI air valves

RMIL



Description

RMIL mounting frames are designed for assembly of KNI supply or KWI exhaust valves. The seal provides air tightness class D according to PN-EN-12237. Available also a long mounting frame version with a seal - product code: **RMIDL**.

Available materials — Product code examples

RMIL-... - galvanized steel sheet
RMIL-K-... - 1.4301/304 stainless steel sheet
RMIL-K-... -316L - 1.4404/316L stainless steel sheet

Product code example

Product code: **RMIL - aaa**

type
Ød

Dimensions

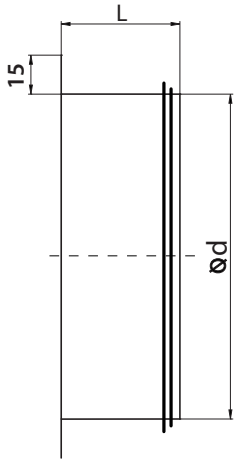

$Ød_{nom}$ (mm)	RMIL L (mm)	RMIDL L (mm)	Weight (kg)
80	55	75	0.06
100	55	75	0.06
125	55	75	0.09
150	55	75	0.10
160	55	75	0.12
200	55	75	0.16
250	55	75	0.22

ALNOR® ventilation systems
is a registered trademark protected by a technical patent. All modification rights reserved.

Sealed long mounting frame for air valves

RMDL



Description

RMDL sealed long frames are designed similarly to the RM mounting frames to accommodate an air supply or exhaust valve. The difference is a longer inward sleeve for a more stable fit when installed. The longer inward sleeve also helps adjusting the end length of the ventilation ductwork: the mounting frame can be fitted in the duct in a range of depth levels to compensate the end length. The seal provides air tightness class D according to PN-EN-12237.

Available materials — Product code examples

RMDL-... - galvanized steel sheet
RMDL-K-... - 1.4301/304 stainless steel sheet
RMDL-K-... -316L - 1.4404/316L stainless steel sheet

Product code example

Product code: **RMDL - aaa**

type
Ød

Dimensions

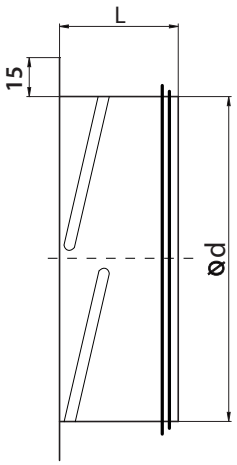

$Ød_{nom}$ (mm)	L (mm)	Weight (kg)
80	75	0.06
100	75	0.06
125	75	0.09
150	75	0.10
160	75	0.12
200	75	0.16
250	75	0.22

ALNOR® ventilation systems
is a registered trademark protected by a technical patent. All modification rights reserved.

Round bezel for ductwork ends

ROZ-H



Description

ROZ-H chrome-finished round bezels provide a neat finish trim to conceal the rough edges of ductwork penetrations.

Material: stainless steel
Finish: polished

Note:
Round bezel sizes Ø>300 feature a polygonal flange.

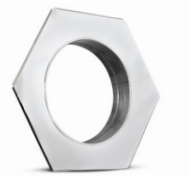

Product code example
Product code: **ROZ-H - aaa**

type
Ød

Dimensions

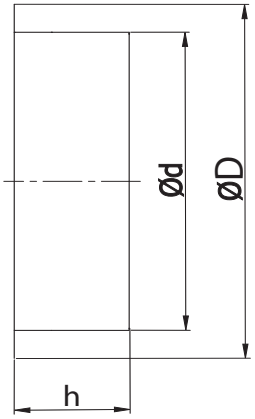

Product code	Ød (mm)	ØD (mm)	h (mm)
ROZ-H-80	90	148	44
ROZ-H-85	96	155	50
ROZ-H-100	110	175	50
ROZ-H-110	119	195	50
ROZ-H-115	125	192	50
ROZ-H-120	130	192	50
ROZ-H-125	135	192	50
ROZ-H-133	142	210	50
ROZ-H-135	145	210	50
ROZ-H-140	150	210	55
ROZ-H-150	160	242	55
ROZ-H-160	170	242	55
ROZ-H-200	210	312	70
ROZ-H-300	310	498x565	100
ROZ-H-315	325	500x570	100

ALNOR® systemy wentylacji
jest prawnie chronionym znakiem i technicznym patentem. Prawo do zmian zastrzeżone.

Round bezel for ductwork ends

ROZ-P



Description

The ROZ-P round bezel is finished with a white powered coat. The component provides a neat finish trim to conceal the rough edges of ductwork penetrations.

Available materials - Product code examples
ROZ-P-... - galvanized steel sheet, powder-coated finish high-gloss RAL 9016

Product code example
Product code: **ROZ-P - aaa**

type
Ød

Dimensions

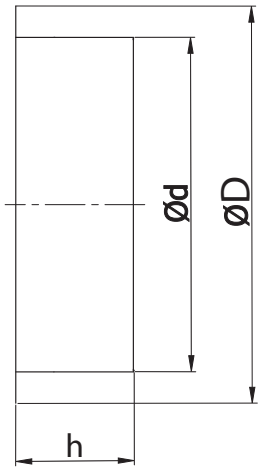

Product code	Ød (mm)	ØD (mm)	h (mm)
ROZ-P-80	90	150	45
ROZ-P-85	95	155	45
ROZ-P-100	110	175	45
ROZ-P-110	120	195	45
ROZ-P-115	125	195	50
ROZ-P-120	130	195	50
ROZ-P-125	135	210	50
ROZ-P-133	143	210	50
ROZ-P-135	145	210	50
ROZ-P-140	150	210	55
ROZ-P-150	160	245	60
ROZ-P-160	170	240	65
ROZ-P-200	210	312	70
ROZ-P-300	310	498x565	100

ALNOR® systemy wentylacji
jest prawnie chronionym znakiem i technicznym patentem. Prawo do zmian zastrzeżone.

Chrome-nickel air supply and exhaust valve
KCN



Description

KCN air valves are designed for both air supply and air exhaust ductwork. They enable smooth and precise adjustment of the air flow rate. The adjustable disk closure has been designed for high air flow performance both in air supply and air exhaust modes. The surface finish has a brushed texture. The KCN air valves have a very high aesthetic value, a long service life, and are very easy to install.

Material: stainless steel
Finish: brushed texture

Available materials — Product code examples
KCN - ... — brushed stainless steel

Product code example
Product code: **KCN - aaa**

type
Ød

Dimensions

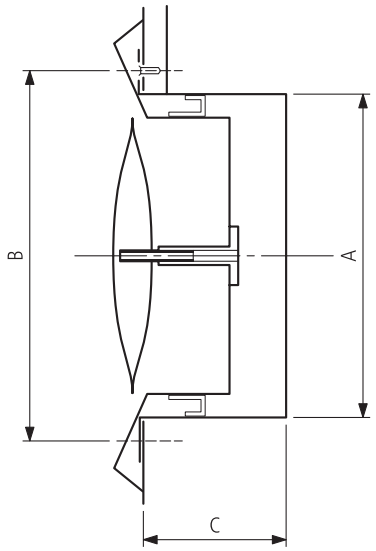

Ød (mm)	A (mm)	B (mm)	C (mm)	External dimension. of the air valve (mm)
100	97	118	52	140
125	120	141	52	172
150	145	162	62	216
160	155	172	62	216
200	195	208	70	293

ALNOR® ventilation systems
is a registered trademark protected by a technical patent. All modification rights reserved.

Telescopic air valves

ELZ

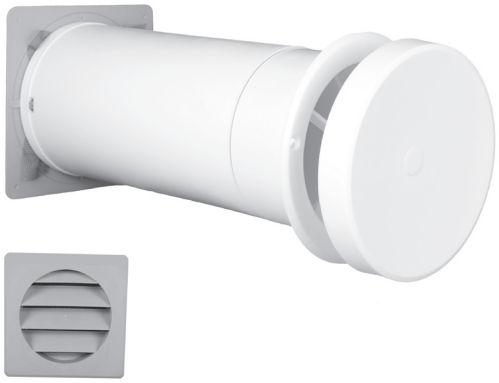

Description

ELZ telescopic air valves without thermal insulation supply fresh air to indoor spaces. One end of the ELZ valve has an outdoor air intake vent with louvres and a protective mesh. The other — indoor — end has a round air supply valve with an adjustable opening. The opening size can be adjusted smoothly by rotating the disk closure, or in a three-step adjustment procedure with a pull cable. The outdoor air intake vent and the air supply valve are connected via a telescopic tube. The ELZ telescopic air valve is designed for installation in the outer wall of the building. The maximum wall thickness should be 350 mm or 400 mm, depending on the size of the ELZ valve. The minimum ceiling clearance for the ELZ valve is 100 mm. The area to be ventilated should be provided with two ELZ valves aligned opposite to each other for the best air flow rate. The outdoor air intake vent is finished in grey and the air intake valve is finished in white.
The ELZ telescopic air valves are intended for single-family houses and apartments in multi-family buildings.

Product code example

Product code: **ELZ - aaa**

type
Ød

Dimensions

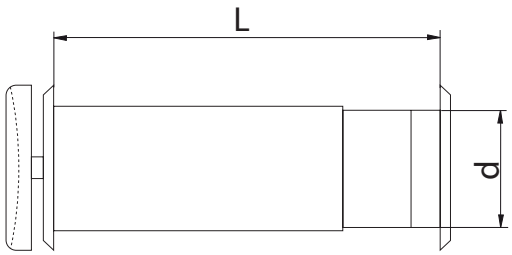

Product code	*Clear surface area (cm²)*	*d (mm)*	*L (mm)*
ELZ-075	20	77	210/350
ELZ-100	35	105	260/400

ALNOR® ventilation systems
is a registered trademark protected by a technical patent. All modification rights reserved.

Telescopic air valves
ELZ-I



Description

ELZ-I telescopic air valves with thermal insulation supply fresh air to indoor spaces. One end of the ELZ-I valve has an outdoor air intake vent with louvres and a protective mesh. The other — indoor — end has a round air supply valve with an adjustable opening. The opening size can be adjusted smoothly by rotating the disk closure, or in a three-step adjustment procedure with a pull cable.
The outdoor air intake vent and the air supply valve are connected via a telescopic tube.
The thermal insulation cladding is installed inside the tube and on the disk closure.
The ELZ-I telescopic air valve is designed for installation in the outer wall of the building. The maximum wall thickness is 400 mm. The minimum ceiling clearance for the ELZ-I valve is 100 mm.
The area to be ventilated should be provided with two ELZ-I valves aligned opposite to each other for the best air flow rate.
The outdoor air intake vent is finished in grey and the air intake valve is finished in white.
The ELZ-I telescopic air valves are intended for single-family houses and apartments in multi-family buildings.

Product code example
Product code: **ELZ-I - aaa**

type
Ød

Dimensions

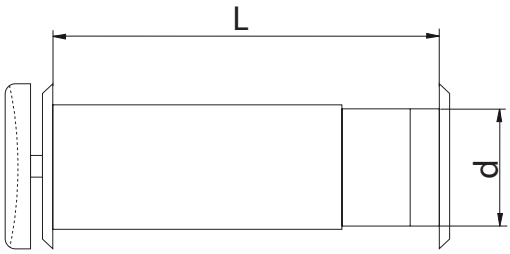

Technical specifications

Product code	*Clear surface area (cm²)*	*d (mm)*	*L (mm)*	*Sound insulation at 250 Hz*
ELZ-I-100-00	35	105	260/400	22.3
ELZ-I-100-05	35	105	260/400	39.5

ALNOR® ventilation systems
is a registered trademark protected by a technical patent. All modification rights reserved.

Telescopic air valves

ELZ-I

Technical specifications

Hz	*dB*
100	33.1
125	35.3
160	32.3
200	27.2
250	22.3
315	14.6
400	23.4
500	23.6
630	19.9
800	29.1
1000	30.7
1250	33.9
1600	37.5
2000	43.0
2500	44.1
3150	46.1

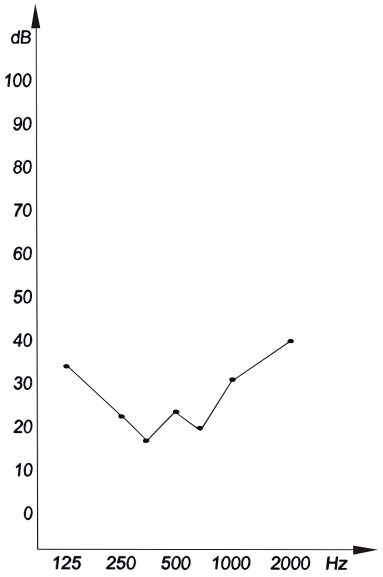

frequency

Sound insulation chart for ELZ-I-100-05

Hz	*dB*
100	33.1
125	35.3
160	32.3
200	27.2
250	22.3
315	14.6
400	23.4
500	23.6
630	19.9
800	29.1
1000	30.7
1250	33.9
1600	37.5
2000	43.0
2500	44.1
3150	46.1

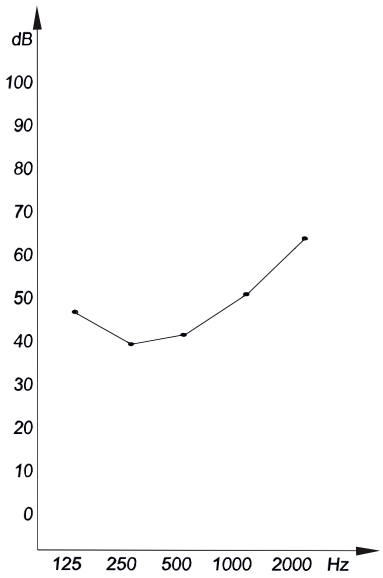

frequency

ALNOR® ventilation systems
is a registered trademark protected by a technical patent. All modification rights reserved.

Plastic air supply and exhaust valve
KPP



Description

KPP air valves are designed for air supply and exhaust systems. They are made from white PVC and as a result, they are corrosion-resistant. The air flow rate is adjusted by twisting the disk closure in and out of the bezel. The opening ratio is fixed with a locknut. The carefully designed geometry of the valve guarantees low noise levels. The KPP air valve is fastened to the ductwork end via a mounting frame. The KPP valve only needs to be press-fitted in the mounting frame.

Product code example

Product code: **KPP - aaa**

type

Ød$_1$

Dimensions

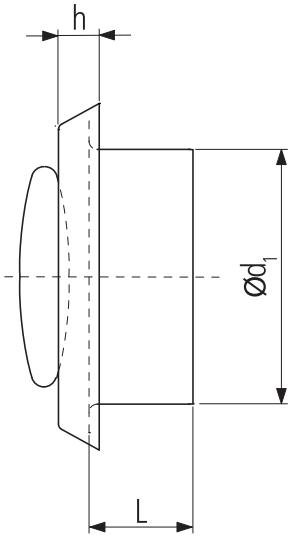

Code	Ød$_1$ [mm]	L [mm]	h [mm]
KPP-100	100	50	15
KPP-125	125	50	15
KPP-150	150	50	15
KPP-160	160	50	15
KPP-200	200	50	15

ALNOR® ventilation systems
is a registered trademark protected by a technical patent. All modification rights reserved.

Wall-mounted air intake/exhaust vent

UELA



Description

Depending on the specific application version, UELA components can serve as air intake vents or air exhaust vents in mechanical or gravity ventilation systems with heat recovery. The vents feature a wire mesh on the inside to prevent the ingress of insects. All vents have a rubber seal and fitting clamps for easy installation. The outer ring has 2 installation holes. The UELA components provide a highly aesthetic finish and a long service life. The product is suitable for outdoor and indoor use.

Available materials - Product code examples
UELA -...- polished stainless steel

Product code example
Product code: **UELA - aaa**

type
Ød

Dimensions

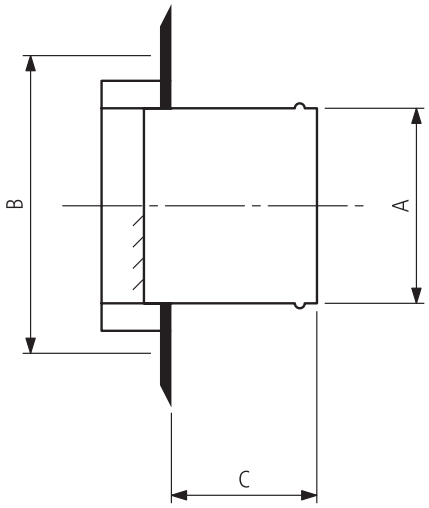

Ød [mm]	A [mm]	B [mm]	C [mm]
100	97	133	52
125	120	165	52
150	145	192	62
160	155	192	62
200	195	253	62

ALNOR® ventilation systems
is a registered trademark protected by a technical patent. All modification rights reserved.

Wall-mounted aluminium air intake/exhaust vent

UELA-AL



Description

UELA-AL can serve both as an intake or exhaust in mechanical ventilation systems, especially in residential heat recovery systems. It's made of aluminium and features wire mesh on the inside to prevent insects from penetrating into the ducts.



Grille is protected with foil.

Available materials
UELA-AL-...- aluminium

Product code example
Product code: **UELA-AL - aaa**

type
Ød

Dimensions

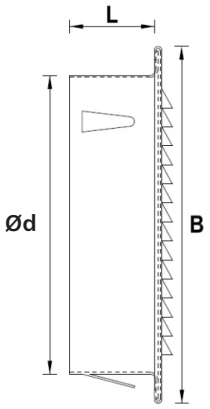

Code	Ød (mm)	B (mm)	L (mm)
UELA-AL-100	100	125	50
UELA-AL-125	125	150	50
UELA-AL-150	150	175	50
UELA-AL-160	160	188	50
UELA-AL-200	200	225	50
UELA-AL-250	250	275	50
UELA-AL-315	315	340	50

ALNOR® ventilation systems
is a registered trademark protected by a technical patent. All modification rights reserved.

Wall-mounted air intake/exhaust vent with drip

UVLA



Description

UVLA air intake/exhaust vents are designed for use in mechanical or gravity ventilation systems with heat recovery. The half-dome cowl prevents air back flow from the gusts outside. The louvres force the exhaust air flow down. The UVLA air intake/exhaust vents have a rubber seal and fitting clamps for easy installation. The product provides a highly aesthetic finish and a long service life. The product is suitable for outdoor and indoor use.

Available materials - Product code examples
UVLA -...- polished stainless steel

Product code example
Product code: **UVLA - aaa**

type
Ød

Dimensions

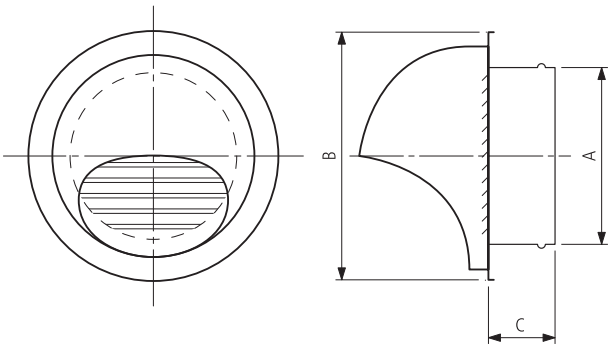

Ød (mm)	A (mm)	B (mm)	C (mm)	Effective area [m²]
100	97	133	52	0.005
125	120	165	52	0.008
150	145	192	62	0.012
160	155	192	62	0.014
200	195	253	62	0.018

Drip styles

UVLA air exhaust vents feature a slim and a wide drip.





ALNOR® ventilation systems
is a registered trademark protected by a technical patent. All modification rights reserved.

Wall-mounted air intake/exhaust vent with drip and wire mesh

USLA



Description

USLA air intake/exhaust vents feature a wire mesh on the inside to prevent the ingress of insects. All vents have a rubber seal and fitting clamps for easy installation. The product provides a highly aesthetic finish and a long service life.
The product is suitable for outdoor and indoor use.

Available materials - Product code examples
USLA -...- polished stainless steel

Product code example
Product code: **USLA - aaa**

type
Ød

Dimensions

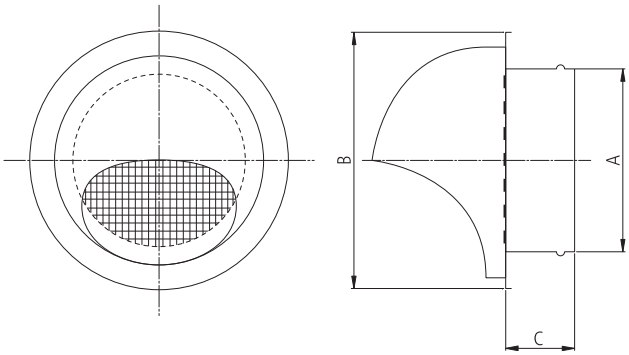

Ød [mm]	A [mm]	B [mm]	C [mm]
100	97	133	52
125	120	165	52
150	145	192	62
160	155	192	62
200	195	253	62

Drip styles

USLA air intake vents feature a slim and a wide drip.

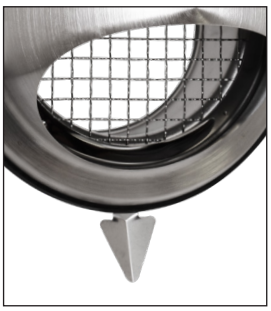

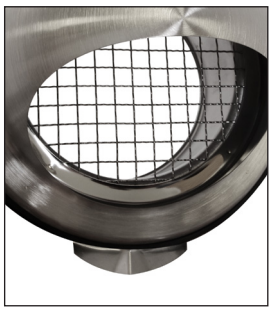

ALNOR® ventilation systems
is a registered trademark protected by a technical patent. All modification rights reserved.

Wall-mounted air intake/exhaust vent with wire mesh

USAV/USAV-BM



Description

USAV components can be used as air intake vents in an air supply system or air exhaust vents at the end of an air exhaust system for all types and modes of ventilation. The USAV air intake/exhaust vents feature on one side a 2x2 mesh of galvanized wires having a diameter of 1 mm.

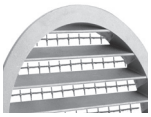

The USAV-BM grille has an insect mesh with a larger mesh size, i.e. 8x8 mm for diameters up to 125 mm, and 12x12 mm for diameters of 150 to 500 mm.

Note:
When installing USAV air intake/exhaust vents on the outside, they must be protected against weather e.g. by coating them with paint in a colour matching the facade.

Available materials - Product code examples
USAV -...- aluminium sheet

Product code example
Product code: **USAV - aaa**

type
Ød

Dimensions

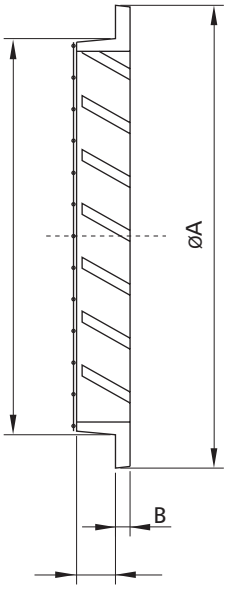

Ød [mm]	ØA [mm]	B [mm]	C [mm]	F [m²]	Weight [kg]
80	100	5,0	15	0,0035	0,14
100	125	5,0	15	0,0044	0,16
125	150	5,0	15	0,0068	0,27
150	175	5,0	15	0,0098	0,32
160	185	5,0	15	0,0120	0,37
200	225	5,0	15	0,0200	0,65
250	275	5,0	15	0,0310	1,12
315	350	7,0	15	0,0470	1,90
400	430	1,0	50	0,0750	3,00
500	530	1,0	50	0,1180	5,50

ALNOR® ventilation systems
is a registered trademark protected by a technical patent. All modification rights reserved.

Wall-mounted air intake/exhaust vent with wire mesh

USAV/USAV-BM

Technical specifications

Performance
The chart shows the total pressure, P_t (Pa) and the sound level, L_W (dB(A)) vs. the volumetric air flow, q (l/s, m³/h).

Open space sound level
The chart shows the sound level, L_W.

Sound level at distance x (m).
LA = LW − K, see the table

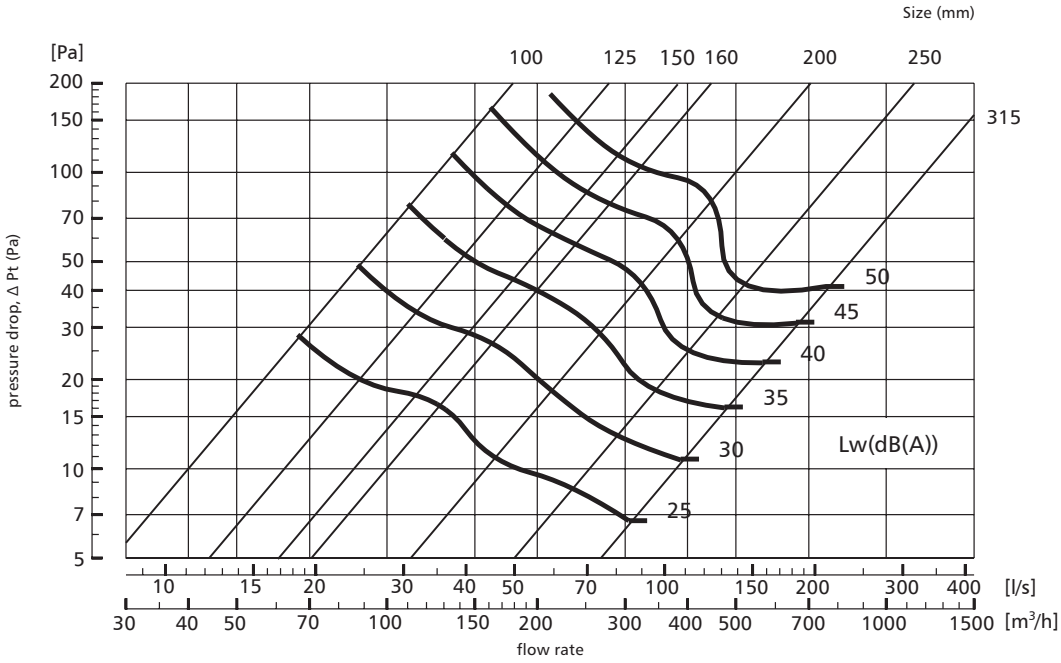

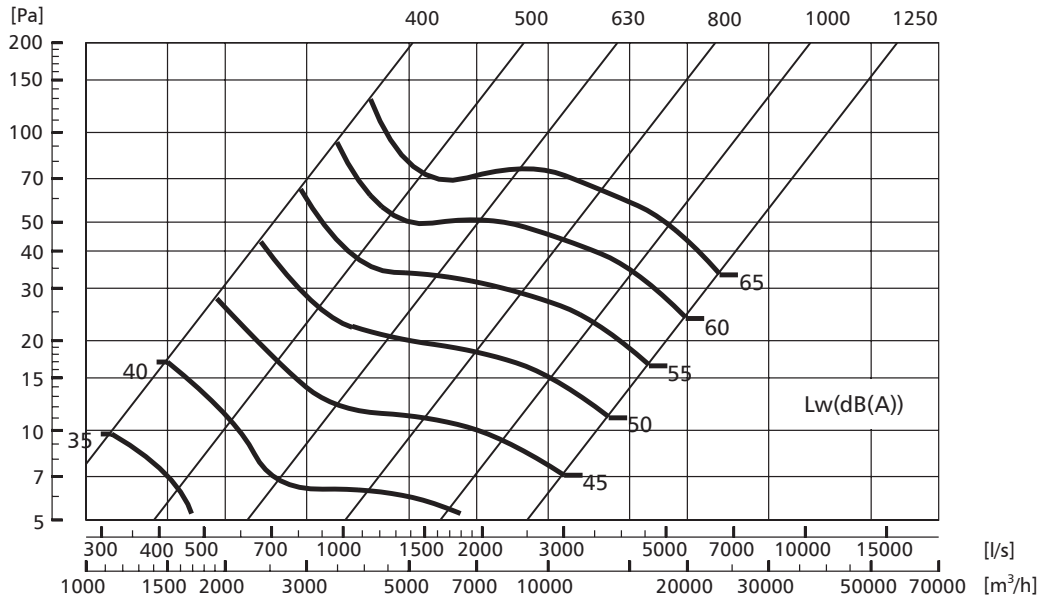

ALNOR® ventilation systems
is a registered trademark protected by a technical patent. All modification rights reserved.

Wall-mounted non-return air exhaust vent with drip cap

USUA



Description

USUA air exhaust vent are made entirely from stainless steel sheet product and designed for use in home ventilation systems. The inverted hopper drip cap protects against the ingress of melt and rain water and the non-return valve in the vent prevents air back flow. The air exhaust vent is installed with screws. The inward sleeve fits round spiral ducts and flexible ducts.

Available materials - Product code examples
USUA -...- stainless steel sheet

Product code example
Product code: **USUA - aaa**

type
Ød

Dimensions

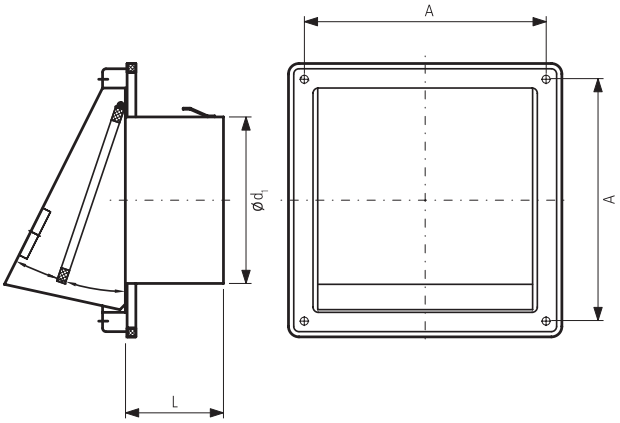

Code	Ød1 [mm]	A x A [mm]	L [mm]	Air flow rate [cm²]
USUA-100	100	137x137	52	71
USUA-125	125	167x167	52	113
USUA-150	150	167x167	62	165

ALNOR® ventilation systems
is a registered trademark protected by a technical patent. All modification rights reserved.

Wall-mounted plastic non-return air exhaust vent

USMS-P



Description

USMS-P air exhaust vents are PVC-based products designed for use in home ventilation systems. The flexible collapsing louvres close the opening when there is no exhaust pressure coming out of the ductwork. The air exhaust vent is installed with screws. The inward sleeve fits round spiral ducts and flexible ducts. The universal joint makes one product size fit 100, 110, 120 and 125 mm ducts.

Product code example
Product code: **USMS-P**

type

Dimensions

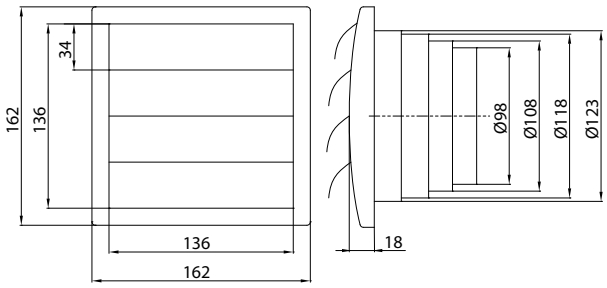

Ød [mm]	A [mm]	B [mm]	C [mm]
100	97	133	52
125	120	165	52
150	145	192	62
160	155	192	62
200	195	253	62

ALNOR® ventilation systems
is a registered trademark protected by a technical patent. All modification rights reserved.

Wall-mounted non-return air exhaust vent

USMS-P



Description

USMS air exhaust vent are made entirely from stainless steel sheet product and designed for use in home ventilation systems. The flexible collapsing louvres close the opening when there is no exhaust pressure coming out of the ductwork. The air exhaust vents are installed with screws. The inward sleeve fits round spiral ducts and flexible ducts.

Available materials - Product code examples
USMS -...- stainless steel

Product code example
Product code: **USMS - aaa**

type
Ød

Dimensions

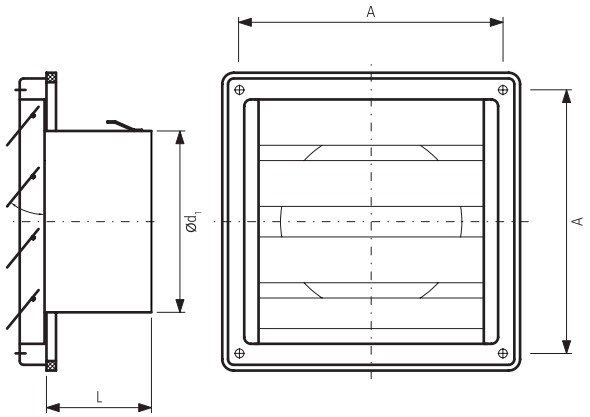

Code	Ød1 [mm]	A x A [mm]	L [mm]	Air flow rate [cm²]
USUA-100	100	137x137	52	70
USUA-125	125	167x167	52	112
USUA-150	150	167x167	62	164

ALNOR® ventilation systems
is a registered trademark protected by a technical patent. All modification rights reserved.

External stainless steel ventilation grille

USUF



Description

USUF external grilles are stainless steel products designed for wall mounting with screws. The deep sleeve-like bezel and the dipped-down louvres protect from the ingress of melt water and rain, while the removable wire mesh keeps insects away.

Available materials — Product code examples
USUF -...- stainless steel

Product code example
Product code: **USUF - aaa**

type
Ød

Dimensions

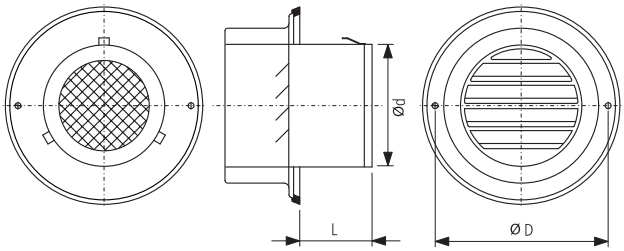

Product code	*Ød₁ (mm)*	*ØD (mm)*	*L (mm)*	*Air flow rate (cm²)*
USUF-100	100	133	52	57
USUF-125	125	165	52	93
USUF-150	150	192	62	138

ALNOR® ventilation systems
is a registered trademark protected by a technical patent. All modification rights reserved.

Stainless steel air intake/exhaust port with wire mesh

USAB



Description

USAB air intake/exhaust ports are used to terminate ductwork ends in mechanical, gravity or heat-recovery ventilation systems. Unlike louvre blades, the wire mesh generates very low air flow resistance while protecting against the ingress of dry leaves, debris or birds into the ductwork. The product is made from stainless steel, and the gasket underneath is made from EPDM rubber and provides a tight and snug fit to the wall. The inward part of the port fits spiral coiled ducts and flexible ducts.

Available materials — Product code examples
USAB -....- stainless steel

Product code example
Product code: **USAB - aaa**

type
Ød

Dimensions

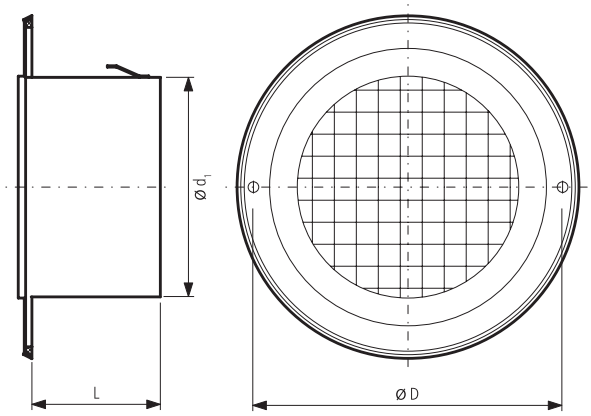

Product code	*Ød$_1$ (mm)*	*ØD (mm)*	*L (mm)*	*Air flow rate (cm²)*
USAB-100	100	133	52	65
USAB-125	125	165	52	101
USAB-150	150	192	62	147
USAB-160	160	192	62	157
USAB-200	200	265	62	235

ALNOR® ventilation systems
is a registered trademark protected by a technical patent. All modification rights reserved.

Decorative wall/floor air intake/exhaust grille

ULMA



Description

ULMA decorative air grilles can be used as an air intake or exhaust vents and have been specifically designed for use in single-family houses. They are made from cast aluminium with an ornamental bezel and spoke finish. The sturdy casting form can withstand typical loads when installed as a floor vent. The inward sleeve of the grille fits spiral coiled ducts and other types of round ventilation ducts. The sleeve features a wire mesh which is easily removable for cleaning.

Available materials — Product code examples
ULMA -....- aluminium sheet

Product code example
Product code: **ULMA - aaa**

type
Ød

Dimensions

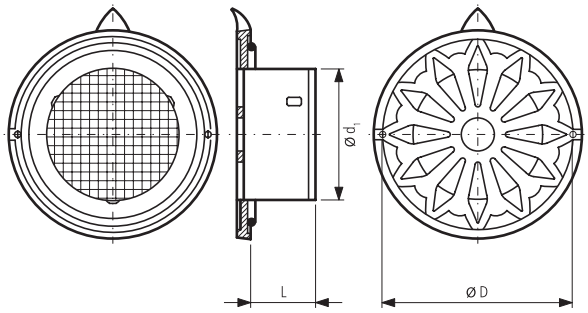

Product code	*Ød$_1$ (mm)*	*ØD (mm)*	*L (mm)*	*Air flow rate (cm²)*
ULMA-100	100	140	52	45
ULMA-125	125	178	52	67
ULMA-150	150	178	62	115

ALNOR® ventilation systems
is a registered trademark protected by a technical patent. All modification rights reserved.

Square air grille for round spiral ducts
SGR

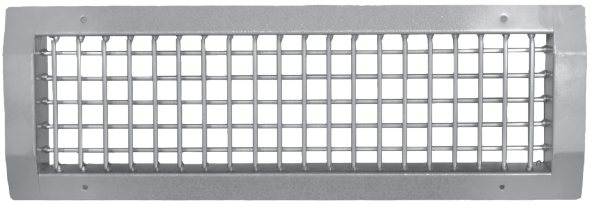

Dimensions

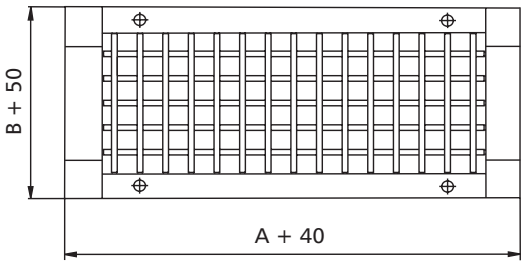

Dimensions A x B (mm)	Min. duct size (mm)	Max. duct size (mm)	Area (m^2)	Weight of SGR-0 (kg)	Weight of SGR-1 (kg)
325x75	160	400	0.024	0.9	1.2
425x75	160	400	0.032	1.1	1.4
525x75	160	400	0.039	1.3	1.7
625x75	160	400	0.047	1.5	1.9
825x75	160	400	0.062	1.7	1.9
325x125	250	900	0.040	1.3	1.7
425x125	250	900	0.053	1.5	1.8
525x125	250	900	0.066	1.7	2.0
625x125	250	900	0.078	2.1	2.4
825x125	250	900	0.103	2.5	3.0
325x225	500	900	0.073	1.9	2.4
425x225	500	1400	0.096	2.7	3.0
525x225	500	1400	0.118	3.1	3.4
625x225	500	1400	0.141	3.4	3.7
825x225	500	1400	0.186	4.8	5.1

Description

SGR air supply/exhaust grilles are installed directly and lengthwise on the round ducts and fastened with screws. The grille has been designed so that the bezel flange fits tightly to the round surface of the duct, whatever the duct diameter. The grille is made of galvanized steel sheet without tack or seam welds. As a result, it requires no anti-corrosion protection and its finish matches that of the ductwork. The grille can be optionally fitted with single or double louvre blades positioned horizontally and vertically. The louvre blade angle is adjusted manually. The air grille can also be fitted with the SGR-DA sliding angle damper.

The grille can be finished by powder coating in any RAL colour.

SGR grille versions

SGR-0 Single louvre blades



SGR-1 Double louvre blade

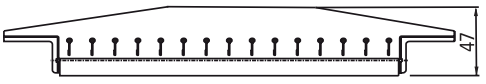

Available materials - Product code examples
SGR-.-...-...- galvanized steel sheet

Product code example
Product code: **SGR - a - bbb - ccc**

type
version
dimension A
dimension B

Dimension of the installation

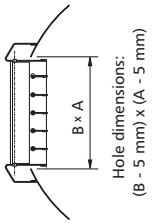

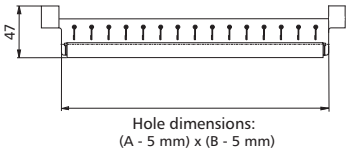

ALNOR® ventilation systems
is a registered trademark protected by a technical patent. All modification rights reserved.

Square air grille for round spiral ducts

SGR

Technical specifications

Selection table

Air flow	A x B	425 x 75	525 x 75	625 x 75	425 x 125	525 x 125	625 x 125	425 x 225	525 x 225	625 x 225	825 x 225
(m^3/h)	Pole (m^2)	0,0130	0,0160	0,0190	0,0250	0,0310	0,0370	0,0490	0,0610	0,0730	0,0970
200	X (m)	5,1	4,6								
	L_A(dB)	24	20								
	Pt (Pa)	12	8								
250	X (m)	6,4	5,7	5,3							
	L_A(dB)	29	25	22							
	Pt (Pa)	19	12	9							
300	X (m)	7,6	6,9	6,3	5,5						
	L_A(dB)	33	29	26	21						
	Pt (Pa)	27	18	13	7						
350	X (m)	8,9	8	7,4	6,4	5,8					
	L_A(dB)	37	33	30	24	20					
	Pt (Pa)	37	24	17	10	6					
400	X (m)	10,2	9,2	8,4	7,3	6,6	6				
	L_A(dB)	40	36	33	28	23	20				
	Pt (Pa)	48	32	23	13	8	6				
450	X (m)	11,5	10,3	9,5	8,3	7,4	6,8				
	L_A(dB)	43	39	36	31	26	23				
	Pt (Pa)	61	40	29	17	11	8				
500	X (m)		11,5	10,5	9,2	8,2	7,6	6,6			
	L_A(dB)		42	38	33	29	25	20			
	Pt (Pa)		50	35	20	13	9	5			
600	X (m)			12,6	11	9,9	9,1	7,9	7,1		
	L_A(dB)			43	38	33	30	24	20		
	Pt (Pa)			51	29	19	13	8	5		
700	X (m)				12,9	11,5	10,6	9,2	8,2	7,5	
	L_A(dB)				41	37	34	28	24	20	
	Pt (Pa)				40	26	18	10	7	5	
800	X (m)				14,7	13,2	12,1	10,5	9,4	8,6	
	L_A(dB)				45	40	37	31	27	24	
	Pt (Pa)				52	34	24	14	9	6	
900	X (m)					14,8	13,6	11,8	10,6	9,7	8,4
	L_A(dB)					43	40	34	30	26	21
	Pt (Pa)					43	30	17	11		
1 000	X (m)						15,1	13,1	11,8	10,8	9,3
	L_A(dB)						42	37	33	29	23
	Pt (Pa)						37	21	14	10	5
1 200	X (m)							15,7	14,1	12,9	11,2
	L_A(dB)							41	37	33	28
	Pt (Pa)							31	20	14	
1 400	X (m)							18,4	16,5	15,1	13,1
	L_A(dB)							45	41	37	32
	Pt (Pa)							42	27	19	11
1 600	X (m)								18,8	17,2	14,9
	L_A(dB)								44	40	35
	Pt (Pa)								35	24	14
1 800	X (m)									19,4	16,8
	L_A(dB)									43	38
	Pt (Pa)									31	18
2 000	X (m)										18,7
	L_A(dB)										40
	Pt (Pa)										22

P_t(Pa) — pressure drop
L_A(dB(A)) — sound pressure level

ALNOR® ventilation systems
is a registered trademark protected by a technical patent. All modification rights reserved.

SGR ventilation ductwork air grille damper

SGR-DA



Description

The SGR-DA sliding angle damper is designed for installation on the SGR air grilles intended for round ventilation ducts. The damper is provided with separate clips for mounting on the air grille. The SGR-DA dampers provide a means to control the air flow rate, air flow speed and air flow range. The damper outlet grate is set at an angle to the air grille surface. The air flow is adjusted by repositioning the damper closure behind the damper grate.

Available materials — Product code examples
SGR-DA-...-...- galvanized steel sheet

Product code example
Product code: **SGR-DA - bbb - ccc**

type
dimension A
dimension B

Dimensions

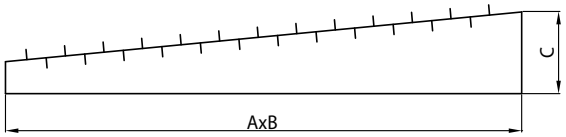

Product code	*A (mm)*	*B (mm)*	*C (mm)*
SGR-DA-325-75	325	75	55
SGR-DA-425-75	425	75	61
SGR-DA-525-75	525	75	70
SGR-DA-625-75	625	75	78
SGR-DA-825-75	825	75	80
SGR-DA-325-125	325	125	40
SGR-DA-425-125	425	125	61
SGR-DA-525-125	525	125	70
SGR-DA-625-125	625	125	75
SGR-DA-825-125	825	125	77
SGR-DA-325-225	325	225	55
SGR-DA-425-225	425	225	61
SGR-DA-525-225	525	225	70
SGR-DA-625-225	625	225	78
SGR-DA-825-225	825	225	78

ALNOR® ventilation systems
is a registered trademark protected by a technical patent. All modification rights reserved.

Square duct air grilles

SHR

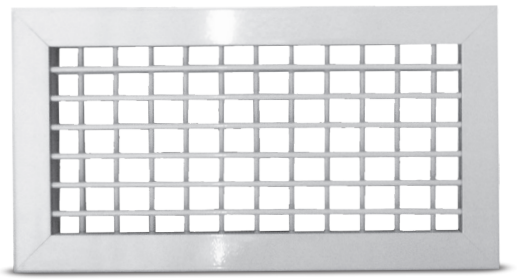

Description

The SHR is an air supply/exhaust grille designed for installation in a square duct wall. The air grille is fastened with dedicated clips included with the product. The grille is made of galvanized steel sheet without any tack or seam welds. It can be used without any anti-corrosion protection. The louvre blade angle is adjusted manually.

Installation
1 - using the provided clips. Recommended use of the mounting frame

Accessories
1 - double louvre blades

Finish
1 - galvanized steel sheet with RAL 9016 powder-coated finish

Product code example
Product code: **SHR - 1 - 1 - 1 - aaa - bbb**

type
installation
accessories
finish
dimension A
dimension B

Dimensions

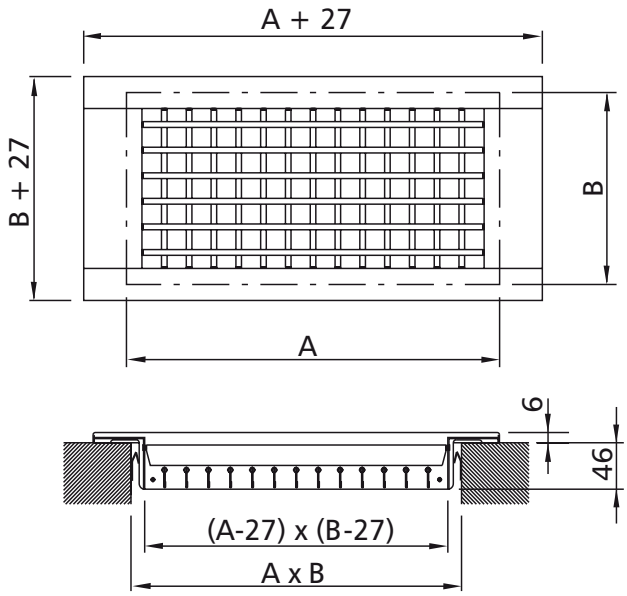

Dimension of the installation

Kod	Wymiar AxB *[mm]*	*Powierzchnia czynna [m²]*
SHR-1-1-1-200-100	200x100	0,0098
SHR-1-1-1-200-150	200x150	0,0147
SHR-1-1-1-200-200	200x200	0,0196
SHR-1-1-1-225-125	225x125	0,0138
SHR-1-1-1-225-75	225x75	0,0083
SHR-1-1-1-250-150	250x150	0,0184
SHR-1-1-1-250-200	250x200	0,0245
SHR-1-1-1-250-250	250x250	0,0306
SHR-1-1-1-300-100	300x100	0,0152
SHR-1-1-1-300-150	300x150	0,0224
SHR-1-1-1-300-200	300x200	0,0299
SHR-1-1-1-325-125	325x125	0,0202
SHR-1-1-1-325-225	325x225	0,0364
SHR-1-1-1-400-200	400x200	0,0432
SHR-1-1-1-400-250	400x250	0,0540
SHR-1-1-1-400-300	400x300	0,0648
SHR-1-1-1-425-125	425x125	0,0287
SHR-1-1-1-425-225	425x225	0,0516
SHR-1-1-1-500-200	500x200	0,0547
SHR-1-1-1-500-250	500x250	0,0684
SHR-1-1-1-500-300	500x300	0,0821
SHR-1-1-1-525-125	525x125	0,0359
SHR-1-1-1-525-225	525x225	0,0646
SHR-1-1-1-600-150	600x150	0,0453
SHR-1-1-1-600-200	600x200	0,0640
SHR-1-1-1-600-250	600x250	0,0341
SHR-1-1-1-625-125	625x125	0,0182
SHR-1-1-1-625-225	625x225	0,0097

ALNOR® ventilation systems
is a registered trademark protected by a technical patent. All modification rights reserved.

Square duct air grilles
SHR

Technical specifications

Selection table for specified sizes

Q [m3/h]	Typ	200 x 100	200 x 150	200 x 200	225 x 75	225 x 125	250 x 150	250 x 200	250 x 250	300 x 100	300 x 150	300 x 200	325 x 125	325 x 225	400 x 200
50	X [m]				2,90										
	La [dB]				< 35										
	Pt [Pa]				0,80										
100	X [m]				5,40	3,20							2,50		
	La [dB]				< 35	< 35							< 35		
	Pt [Pa]				2,40	1,00							0,80		
150	X [m]	2,60	2,30		7,80	4,60							3,90	2,20	
	La [dB]	22,10	< 20		< 35	< 35							< 35	< 35	
	Pt [Pa]	8,10	5,10		4,90	2,00							1,50	0,70	
200	X [m]	3,20	2,80	2,40	10,10	6,00	2,40	2,20	2,40	2,60			5,00	2,90	
	La [dB]	27,10	22,10	< 20	35,10	< 35	< 20	< 18	< 18	< 20			< 35	< 35	
	Pt [Pa]	13,10	8,10	4,10	8,10	3,20	4,10	2,10	5,54	7,10			2,40	1,10	
250	X [m]	4,00	3,50	2,90	12,10	7,70	2,90	2,50	2,60	3,20	2,70	2,50	3,70	3,00	2,50
	La [dB]	33,10	28,10	20,10	35,10	35,10	20,10	18,10	22,50	24,10	< 20	< 18	26,10	21,10	17,10
	Pt [Pa]	20,10	12,10	6,10	11,60	4,60	6,10	6,10	10,00	16,10	8,60	9,10	17,10	14,10	12,10
300	X [m]	4,70	4,20	3,50	14,50	8,50	3,50	2,90	3,10	3,90	3,20	3,10	7,10	4,10	3,10
	La [dB]	37,10	32,10	25,10	< 40	35,10	25,10	21,10	26,50	29,10	21,10	18,10	< 35	< 35	< 35
	Pt [Pa]	29,10	18,10	8,10	16,70	6,60	8,10	10,10	11,50	13,10	6,30	5,70	5,00	2,10	1,10
350	X [m]	5,50	4,90	4,10	4,10	4,10	4,10	3,10	3,60	4,10	3,70	3,20	4,30	3,90	3,50
	La [dB]	41,10	36,10	29,10	36,10	29,10	29,10	26,10	29,00	33,10	25,10	22,10	35,10	30,10	25,10
	Pt [Pa]	39,10	24,10	11,10	29,10	19,10	11,10	9,10	14,50	17,10	7,60	12,70	35,10	31,10	29,10
400	X [m]	6,30	5,60	4,60	18,50	10,80	4,60	4,10	4,50	5,10	4,20	3,80	9,00	5,20	3,00
	La [dB]	44,10	39,10	32,10	40,10	< 40	32,10	28,10	32,50	36,10	28,10	23,10	< 35	< 35	< 20
	Pt [Pa]	51,10	32,10	15,10	27,90	11,00	15,10	11,10	18,50	23,10	10,10	8,10	8,20	3,50	4,00
500	X [m]		6,90	5,70	22,30	13,00	5,70	5,40	5,90	6,40	5,20	4,90	10,70	6,30	3,80
	La [dB]		45,10	37,10	< 45	< 40	37,10	32,10	36,50	41,10	33,10	30,10	35,10	< 35	20,10
	Pt [Pa]		49,10	23,10	41,70	16,40	23,10	20,10	26,50	35,10	15,10	12,10	12,30	5,20	10,10
600	X [m]			6,90	26,00	15,10	6,90				6,20	6,10	12,40	7,30	4,50
	La [dB]			42,10	45,10	40,10	42,10				38,10	35,10	< 40	35,10	25,10
	Pt [Pa]			33,10	57,80	22,80	33,10				22,10	20,10	17,00	7,20	14,10
700	X [m]			8,00		17,20	8,00				7,20	6,70	14,10	8,30	5,70
	La [dB]			45,10		< 45	45,10				41,10	40,10	40,10	< 40	29,10
	Pt [Pa]			45,10		30,00	45,10				30,10	24,10	22,40	9,40	14,10
800	X [m]					19,20						7,50	15,70	9,30	6,00
	La [dB]					45,10						35,10	< 45	< 40	32,10
	Pt [Pa]					38,10						30,10	28,50	12,00	11,10
900	X [m]												17,20	10,10	6,70
	La [dB]												45,10	40,10	35,10
	Pt [Pa]												35,10	14,80	13,10
1000	X [m]												18,80	11,20	7,30
	La [dB]												< 50	< 45	37,10
	Pt [Pa]												42,50	17,80	17,10
1200	X [m]													13,00	8,90
	La [dB]													45,10	42,10
	Pt [Pa]													24,70	24,10
1400	X [m]													14,80	10,40
	La [dB]													< 50	45,10
	Pt [Pa]													32,60	32,10
1600	X [m]													16,50	
	La [dB]													50,10	
	Pt [Pa]													41,50	
1800	X [m]													18,20	
	La [dB]													< 55	
	Pt [Pa]													51,20	
2000	X [m]														
	La [dB]														
	Pt [Pa]														
2500	X [m]														
	La [dB]														
	Pt [Pa]														

X (m) — air flow range
P_t(Pa) — pressure drop
L_A(dB(A)) — sound pressure level

ALNOR® ventilation systems
is a registered trademark protected by a technical patent. All modification rights reserved.

Technical specifications

Selection table for specified sizes

Q [m3/h]	Typ	400 x 250	400 x 300	425 x 125	425 x 225	500 x 200	500 x 250	500 x 300	525 x 125	525 x 225	600 x 150	600 x 200	600 x 250	625 x 125	625 x 225
50	X [m]														
	La [dB]														
	Pt [Pa]														
100	X [m]			2,15											
	La [dB]			< 35											
	Pt [Pa]			0,55											
150	X [m]			3,05	3,95				2,75					2,25	
	La [dB]			< 35	< 35				< 35					< 35	
	Pt [Pa]			1,05	0,55				0,85					0,75	
200	X [m]			3,85	4,75				3,45	4,05				2,95	3,35
	La [dB]			< 35	< 35				< 35	< 35				< 35	< 35
	Pt [Pa]			1,75	0,85				1,45	0,65				1,15	0,45
250	X [m]			3,65	4,35				4,05	4,55				2,75	3,15
	La [dB]			< 35	< 35				< 35	< 35				< 35	< 35
	Pt [Pa]			2,35	1,95				2,55	2,25				2,35	3,75
300	X [m]			5,45	6,05				4,95	5,15				4,15	4,35
	La [dB]			< 35	< 35				< 35	, 35				< 35	< 35
	Pt [Pa]			3,35	1,55				2,75	1,15				2,15	0,85
350	X [m]			6,35	6,65				5,65	5,85				5,65	5,45
	La [dB]			< 35	< 35				< 35	< 35				< 35	< 35
	Pt [Pa]			6,05	2,15				4,35	2,35				2,45	1,65
400	X [m]	2,55	2,65	6,85	7,15				6,25	6,05				5,25	5,15
	La [dB]	< 14	< 14	< 35	< 35				< 35	< 35				< 35	< 35
	Pt [Pa]	6,25	6,35	5,55	2,45				4,55	1,85				3,55	1,25
500	X [m]	3,34	3,45	8,15	8,15	3,45	3,60	3,75	7,55	6,85	3,05	3,15	4,50	6,35	5,75
	La [dB]	18,05	18,15	< 35	< 35	< 20	< 20	< 20	< 35	< 35	< 18	< 20	< 20	< 35	< 35
	Pt [Pa]	9,05	9,15	8,25	3,55	3,15	4,60	6,15	6,65	2,65	2,05	2,15	3,50	5,25	1,85
600	X [m]	4,10	4,25	9,45	8,95	4,05	4,15	4,85	8,75	7,65	3,45	3,75	5,50	7,35	6,45
	La [dB]	22,05	22,15	35,15	< 35	20,15	22,50	24,50	35,15	< 35	< 18	< 20	< 20	35,15	< 35
	Pt [Pa]	12,05	12,15	11,35	4,95	4,15	7,50	8,15	9,25	3,65	3,10	3,15	4,50	7,25	2,55
700	X [m]	5,05	5,25	10,65	9,75	4,75	5,15	4,85	9,95	8,35	4,10	4,35	6,80	8,35	7,05
	La [dB]	22,15	23,15	< 40	35,15	24,15	25,60	46,50	< 40	< 35	20,10	20,15	24,50	< 40	< 35
	Pt [Pa]	9,85	10,15	14,95	6,45	5,15	5,55	5,45	12,15	4,75	3,10	3,15	4,50	9,45	3,25
800	X [m]	5,15	5,35	11,85	10,55	5,35	5,85	5,95	11,05	8,95	4,65	4,95	6,50	9,35	7,55
	La [dB]	29,85	30,15	40,15	< 40	27,15	29,00	31,15	40,15	35,15	22,15	24,15	< 40	< 40	< 35
	Pt [Pa]	6,85	7,15	19,05	8,15	7,15	7,40	8,25	15,35	5,95	5,05	5,15	9,50	12,05	4,15
900	X [m]	6,10	6,25	12,95	11,25	6,05	6,25	6,35	12,25	9,65	5,40	5,55	8,50	10,15	8,15
	La [dB]	30,05	30,15	< 45	< 40	30,15	31,00	32,15	< 45	< 40	24,50	26,15	32,50	40,15	35,15
	Pt [Pa]	9,95	10,15	23,45	10,05	8,15	8,40	9,15	18,95	7,35	5,95	6,15	9,50	14,85	5,05
1000	X [m]	6,95	7,15	14,15	11,95	6,65	6,95	7,55	12,15	10,15	6,08	6,05	9,50	11,25	8,65
	La [dB]	31,15	32,15	< 45	40,15	33,15	34,50	35,65	< 45	< 40	27,50	29,15	< 45	< 45	< 40
	Pt [Pa]	12,15	14,15	28,35	12,15	10,15	10,25	12,50	22,85	8,85	6,95	7,15	14,50	17,85	6,15
1200	X [m]	8,05	8,35	16,35	13,25	7,95	8,15	9,50	15,55	11,35	7,10	7,25	12,00	13,05	9,55
	La [dB]	37,15	39,15	45,15	< 45	37,15	37,95	39,15	45,15	40,15	31,15	33,15	39,50	45,15	< 40
	Pt [Pa]	19,55	20,15	39,35	16,75	15,15	15,65	16,15	31,75	12,15	9,85	10,15	16,50	24,75	8,45
1400	X [m]	9,85	10,15	18,45	14,45	10,05	10,45	12,45	17,65	12,35	8,45	8,45	12,50	14,85	10,45
	La [dB]	40,05	41,15	< 50	45,15	41,15	42,56	42,98	< 50	< 45	35,45	37,15	< 50	< 50	< 40
	Pt [Pa]	26,55	28,15	51,85	22,05	20,15	20,45	22,50	41,85	16,05	13,50	14,15	28,50	32,65	11,15
1600	X [m]				15,65					13,35	11,00	11,15	12,50	16,55	11,35
	La [dB]				< 50					45,15	29,10	31,15	45,60	50,15	40,15
	Pt [Pa]				28,05					20,35	14,50	16,15	32,50	41,55	14,05
1800	X [m]				16,75					14,25	8,50	10,85	16,50	18,25	12,15
	La [dB]				50,15					< 50	40,15	43,15	< 55	< 55	< 45
	Pt [Pa]				34,65					25,15	20,15	23,15	39,50	51,25	17,15
2000	X [m]				17,75					15,15	10,05	12,05	14,50		12,85
	La [dB]				< 55					50,15	44,15	46,15	50,50		< 45
	Pt [Pa]				41,85					30,35	26,50	28,15	32,50		20,95
2500	X [m]				19,65					16,75					14,35
	La [dB]				< 55					< 50					45,15
	Pt [Pa]				57,95					42,05					29,05

X (m) — air flow range
P_t(Pa) — pressure drop
L_A(dB(A)) — sound pressure level

ALNOR® ventilation systems
is a registered trademark protected by a technical patent. All modification rights reserved.

Dampers for SHR grilles

SHR-DAW



Description

The SHR-DAW air damper features opposite-rotation aluminium blades and it is designed for installation below the SHR air grilles.
The air damper enables controlling the air flow rate without having to remove and adjust the entire air supply diffuser.
The air damper opening ratio is adjusted with a screwdriver.

Material: aluminium

Product code example

Product code: SHR-DAW aaa bbb

type
dimension A
dimension B

When installing the SHR-DAW air damper, the correction factor percentage for P_t (pressure loss) and L_A (sound pressure level) should be chosen according to the opening ratio (see the selection table in the SHR Air Grille Product Data Sheet).

Opening ratio	*Correction factor*
20%	1.2
40%	1.5
60%	3.0
80%	7.0

Dimensions

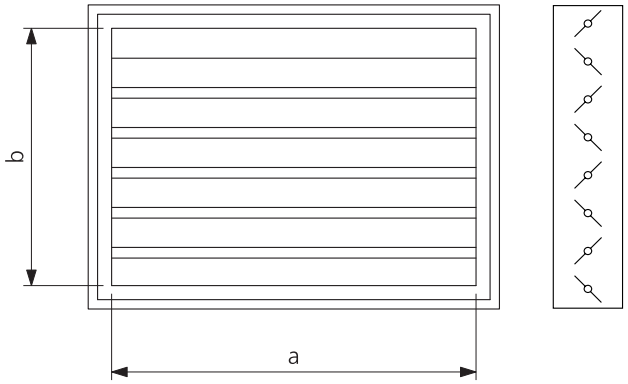

Product code	*Nominal dimension a x b (mm)*
SHR-DAW 200-100	173x73
SHR-DAW 200-150	173x123
SHR-DAW 200-200	173x173
SHR-DAW 225-125	198x98
SHR-DAW 225-75	198x48
SHR-DAW 250-150	223x123
SHR-DAW 250-200	223x173
SHR-DAW 250-250	223x223
SHR-DAW 300-100	273x73
SHR-DAW 300-150	273x123
SHR-DAW 300-200	273x173
SHR-DAW 325-125	298x98
SHR-DAW 325-225	298x198
SHR-DAW 400-200	373x173
SHR-DAW 400-250	373x223
SHR-DAW 400-300	373x273
SHR-DAW 425-125	398x98
SHR-DAW 425-225	398x198
SHR-DAW 500-200	473x173
SHR-DAW 500-250	473x223
SHR-DAW 500-300	473x273
SHR-DAW 525-125	498x98
SHR-DAW 525-225	498x198
SHR-DAW 600-150	573x123
SHR-DAW 600-200	573x173
SHR-DAW 600-250	573x223
SHR-DAW 625-125	598x98
SHR-DAW 625-225	598x198

Size tolerance +/- 2%

ALNOR® ventilation systems
is a registered trademark protected by a technical patent. All modification rights reserved.

Mounting frame for installation of SHR air grilles on square ducts

SHR-RM



Description

The SHR-RM mounting frame is sized to fit the SHR air grilles which are fastened with dedicated S-shaped clips. The hemmed rim allows attaching the port sleeve to a square duct wall.

Available materials — Product code examples

SHR-RM-...-... - galvanized steel sheet
SHR-RM-K-...-... - 1.4301/304 stainless steel sheet
SHR-RM-K-...-... -316L - 1.4404/316L stainless steel sheet
SHR-RM-A-...-... - aluminium sheeta

Product code example

Product code: **SHR-RM - aaa - bbb**

type
dimension A
dimension B

Dimensions

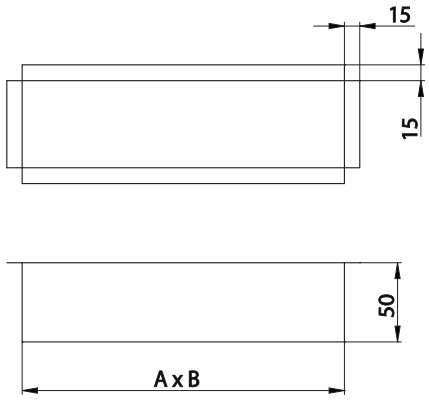

Product code	Dimension A x B *[mm]*	*Area [m²]*
SHR-RM-200-100	200x100	0,020
SHR-RM-200-150	200x150	0,030
SHR-RM-200-200	200x200	0,040
SHR-RM-225-125	225x125	0,028
SHR-RM-225-75	225x75	0,017
SHR-RM-250-150	250x150	0,038
SHR-RM-250-200	250x200	0,050
SHR-RM-250-250	250x250	0,063
SHR--RM-300-100	300x100	0,030
SHR-RM-300-150	300x150	0,045
SHR-RM-300-200	300x200	0,060
SHR-RM-325-125	325x125	0,041
SHR-RM-325-225	325x225	0,073
SHR-RM-400-200	400x200	0,080
SHR-RM-400-250	400x250	0,100
SHR-RM-400-300	400x300	0,120
SHR-RM-425-125	425x125	0,053
SHR-RM-425-225	425x225	0,096
SHR-RM-500-200	500x200	0,100
SHR-RM-500-250	500x250	0,125
SHR-RM-500-300	500x300	0,150
SHR-RM-525-125	525x125	0,066
SHR-RM-525-225	525x225	0,118
SHR-RM-600-150	600x150	0,090
SHR-RM-600-200	600x200	0,120
SHR-RM-600-250	600x250	0,150
SHR-RM-625-125	625x125	0,078
SHR-RM-625-225	625x225	0,141

ALNOR® ventilation systems
is a registered trademark protected by a technical patent. All modification rights reserved.

Square supply diffusers

NCD-S

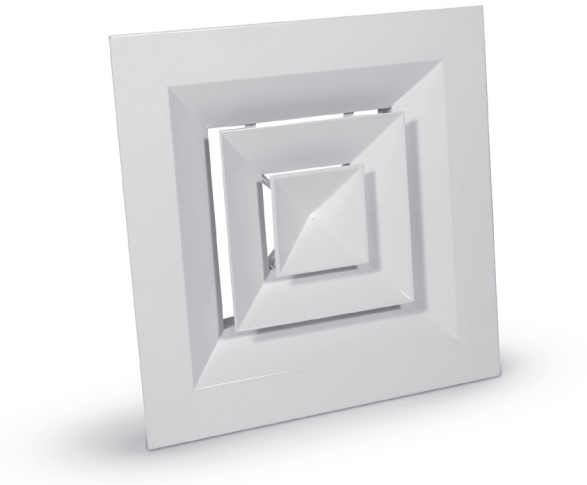

Description

The NCD-S square diffusers are compatible with low- and medium-pressure ventilation systems as well as A/C air supply and exhaust ducts. They can be used in steady and variable air flow systems and environmental RH up to 70%.
The vane angle is fixed. As a result, the diffuser provides a horizontal air flow and it is recommended for spaces with a maximum ceiling height of 4 m. The diffuser is designed for installation on square ducts, to plenum (expansion) boxes and as ductwork termination on suspended ceiling using screws. The diffusers are light-weight easy-to-install products and require no additional bracing of suspended ceiling panels. The diffuser vanes can be removed without detaching the entire diffuser. The diffuser provides air supply in four directions. It is not recommended installing the diffusers with clip fasteners on the ceiling.
When installed on the PRK plenum box, they provide a uniform air supply, while an insulated version of the plenum box reduces the ductwork and air noise level.

Available materials — Product code examples
NCD-S-...-....- aluminium sheet with powder-coated finish
colour: RAL 9016

Product code example
Product code: **NCD-S - 295-295**

type
dimension

Dimensions

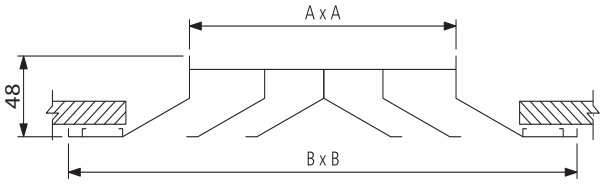

Product code	A x A *[mm]*	*B x B [mm]*	*Number of vanes*
NCD-S-295-295	148x148	296x296	2
NCD-S-370-370	225x225	370x370	3
NCD-S-445-445	298x298	443x443	4
NCD-S-520-520	375x375	520x520	5
NCD-S-595-595	446x446	598x598	6

This product is installed with a PRK plenum box in the standard version.

ALNOR® ventilation systems
is a registered trademark protected by a technical patent. All modification rights reserved.

Square supply diffusers

NCD-S

Technical specifications

Selection table

dimension (mm)	*A × A (mm)*	*Characteristics*							
295-295	145x145	V [m³/h]	170	190	215	235	255	275	300
295-295	145x145	T [m]	1,6-2,5	1,6-2,8	1,9-2,8	2,2-3,1	2,5-3,4	2,5-3,4	2,5-3,4
295-295	145x145	PS [Pa]	8	9	12	14	17	19	23
295-295	145x145	NC [dB]	15	16	17	19	20	21	22
370-370	220x220	V [m³/h]	380	430	480	525	570	620	670
370-370	220x220	T [m]	2,5-3,7	2,8-4,0	3,1-4,3	3,1-4,3	3,4-4,6	3,4-5,0	3,7-5,0
370-370	220x220	PS [Pa]	9	13	14	17	20	21	27
370-370	220x220	NC [dB]	18	19	21	22	24	25	26
445-445	295x295	V [m³/h]	680	765	850	935	1020	1105	1190
445-445	295x295	T [m]	3,4-5,0	3,7-5,6	4,0-5,9	4,3-6,2	4,3-6,5	4,6-6,8	5,0-7,1
445-445	295x295	PS [Pa]	10	12	16	19	22	23	30
445-445	295x295	NC [dB]	18	20	22	23	25	26	28
520-520	370x370	V [m³/h]	1060	1200	1325	1460	1590	1725	1855
520-520	370x370	T [m]	4,3-6,5	5,0-6,8	5,2-7,1	5,2-7,4	5,6-7,8	5,9-8,1	5,9-8,7
520-520	370x370	PS [Pa]	11	15	18	21	24	28	33
520-520	370x370	NC [dB]	19	21	23	25	27	28	30
595-595	445x445	V [m³/h]	1530	1720	1915	2110	2300	2500	2680
595-595	445x445	T [m]	6,5-7,8	6,2-8,1	6,2-8,7	6,5-9,0	6,5-9,3	6,8-9,9	7,1-10,2
595-595	445x445	PS [Pa]	12	15	18	22	26	29	34
595-595	445x445	NC [dB]	20	21	24	26	28	30	31

T [m] - zasięg podany kolejno dla prędkości 0,5 m/s; 0,25 m/s
Ps [Pa] - ciśnienie statyczne
NC [dB] - głośność przy przyjętym tłumieniu pomieszczenia 10 dB

ALNOR® ventilation systems
is a registered trademark protected by a technical patent. All modification rights reserved.

Air damper

NCD-S-DA



Description

The NCD-S-DA air damper features opposite-rotation aluminium blades and it is designed for installation in combination with the NCD-S square diffuser. The air damper enables controlling the air flow rate without having to remove and adjust the entire air supply diffuser. The air damper opening ratio is adjusted with a screwdriver.

Available materials - Product code examples
NCD-S-DA-...-....- aluminium sheet

Product code example
Product code: **NCD-S-DA - 295-295**

type
dimension

Dimensions

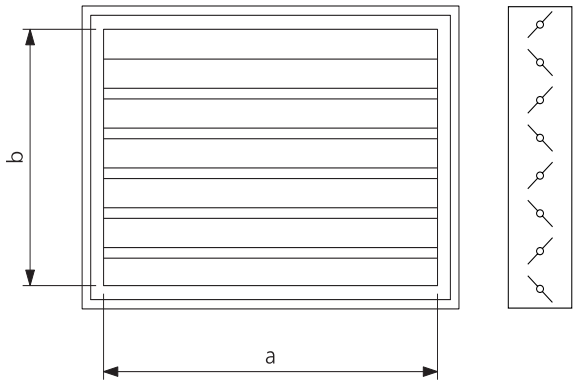

Product code	*A x A (mm)*
NCD-S-DA-295-295	150
NCD-S-DA-370-370	225
NCD-S-DA-445-445	305
NCD-S-DA-520-520	375
NCD-S-DA-595-595	450

ALNOR® ventilation systems
is a registered trademark protected by a technical patent. All modification rights reserved.

Plenum boxes for NCD-S diffusers
PRK



Description

The PRK plenum boxes connect the ductwork ends to square diffusers in low - or medium-pressure ventilation systems.
A plenum box stabilizes the air supply, providing uniform air flow rate before the air enters the diffuser. The ductwork is connected to the plenum box inlet port at the side or from above, depending on the product type. The inlet port can be provided with a damper.
ALNOR fabricates plenum boxes lined with flexible and heat-resistant 9 mm thick rubber insulation mats.
Custom plenum boxes manufactured as per customer specifications are also available.

Symbols:
Type of connection:
B - side inlet
G - top inlet
Equipment:
D - with air damper
Insulation:
I - insulated

Finish:
The standard version is supplied unpainted.
RAL 9016 powder-coat finish is available on request.

Available materials - Product code examples
PRK-...-...-.... - galvanized steel sheet
PRK-...-K-...-... - 1.4301/304 stainless steel sheet

Product code example
Product code: **PRK - 295 - B - D - I - Ød**

type
size
connection
equipment
insulation
diameter

Dimensions

Type B — side inlet

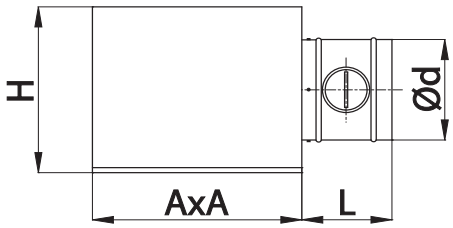

Type G — top inlet

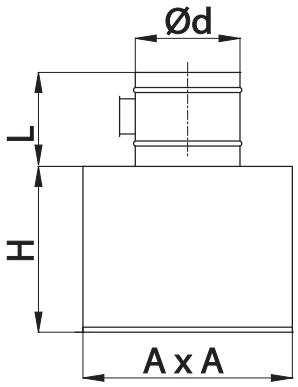

Size	*Diffuser type (mm)*	*A x A (mm)*	*H (mm)*	*Max. Ød (mm)*	*Standard Ød (mm)*	*L (mm)*
295	295-295	138x138	200	125	80	165
370	370-370	215x215	250	200	160	165
445	445-445	293x293	350	280	160	165
520	520-520	364x364	350	315	200	165
595	595-595	440x440	400	355	200	165

ALNOR® systemy wentylacji
jest prawnie chronionym znakiem i technicznym patentem. Prawo do zmian zastrzeżone.

Swirl diffuser
GCR



Description

GCR swirl diffuser is equipped with fixed blades bent at a constant angle. It is made of galvanized steel sheet, powder coated in RAL9010. Swirl diffusers ensure mixing of the fresh air stream with the room air, which is recommended for supplying cold air. They provide a stable flow of the stream and are intended for rooms up to 4m high, for example in public facilities such as hotels, restaurants, office buildings.

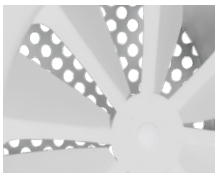

The perforated plate leads to rapid air flow velocity decrease at low noise levels.

Versions:

GCR-N-...	- without a gasket
GCR-F-...	- without a gasket, female connector
GCR-NP-...	- without a gasket, with perforation
GCR-FP-...	- without a gasket, female connector, with perforation
GCR-L-...	- with gasket
GCR-LP-...	- with gasket and with perforation

Available materials - Product code examples
GCR-..-...- galvanized steel sheet, powder painted RAL9010

Product code example
Product code: **GCR-N - aaa**

type
Ød

Dimensions

GCR-N / GCR-F

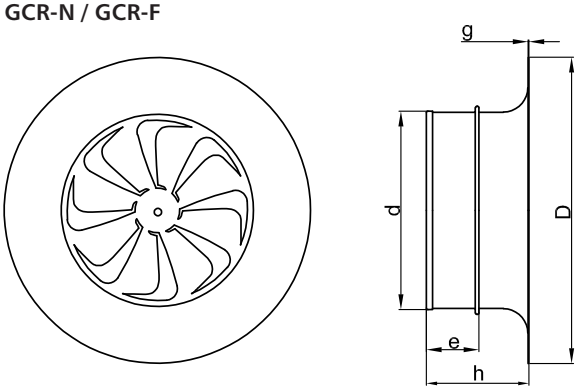

Code	Ød [mm]	ØD [mm]	h [mm]	g [mm]
GCR-N-125	125	200	80	0.8
GCR-N-160	160	250	80	0.8
GCR-N-200	200	300	80	0.8
GCR-N-250	250	350	80	0.8
GCR-N-315	315	450	80	0.8
GCR-N-400	400	570	110	0.8

GCR-NP / GCR-FP / GCR-L / GCR-LP

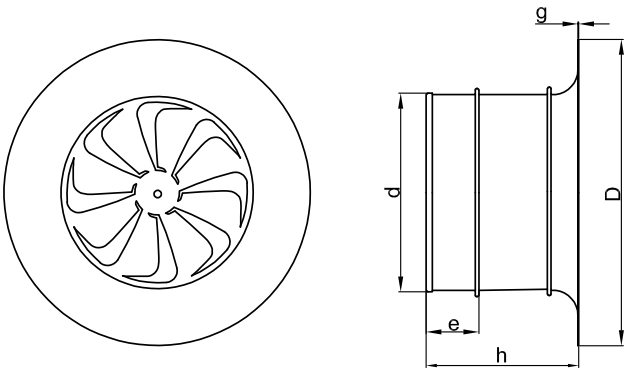

Code	Ød [mm]	ØD [mm]	h [mm]	g [mm]
GCR-FP-125	125	200	160	0.8
GCR-FP-160	160	250	160	0.8
GCR-FP-200	200	300	160	0.8
GCR-FP-250	250	350	160	0.8
GCR-FP-315	315	450	160	0.8
GCR-FP-400	400	570	230	0.8

Attention: In Ø400 diffusers there's a special folding at the connection edge for better stiffness.

ALNOR® ventilation systems
is a registered trademark protected by a technical patent. All modification rights reserved.

Technical specifications

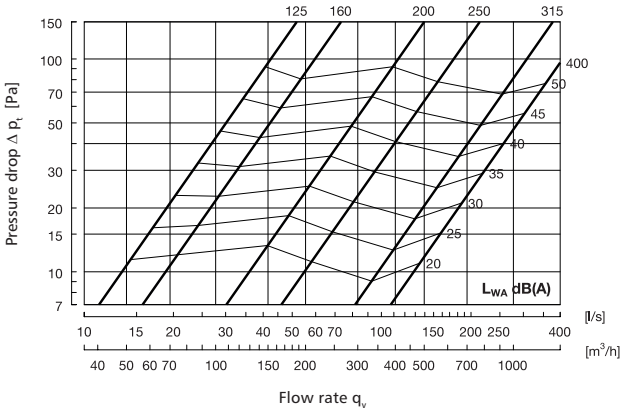

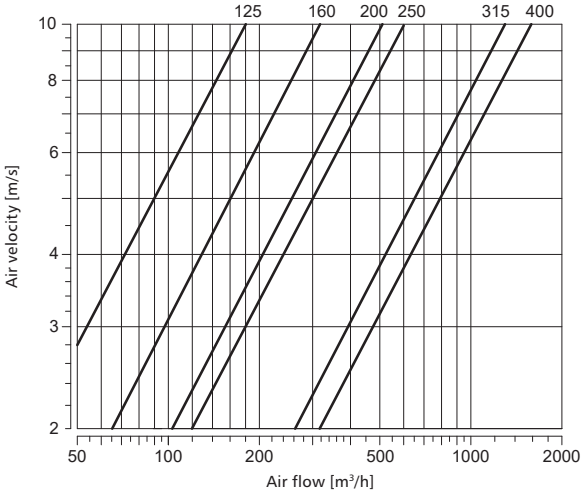

ALNOR® ventilation systems
is a registered trademark protected by a technical patent. All modification rights reserved.

Swirl diffusers

NKSD-C



Description

The NKSD-C swirl diffuser is designed for low- and medium-pressure ventilation systems. A distinctive feature of this product is the outlet which swirls the incoming air to mix the indoor air volume with the fresh air stream. The swirl diffuser features adjustable plastic vanes (8 to 48 vanes, depending on the product type) to force a uniform and steady air stream. The product is easy to use and designed for installation on a plenum box.
It can be operated in steady and variable air flow systems. The swirl diffusers are mostly installed in ventilated industrial spaces and climate-controlled areas. The swirl diffuser is installed flush with the ceiling.
When installed on the PRW plenum box, they provide a uniform air supply, while an insulated version of the plenum box reduces the ductwork and air noise level. The NKSD-C swirl diffusers come without installation screws.

Available materials - Product code examples
NKSD-C-...-....- galvanized steel sheet with powder-coated finish, color RAL 9016.

Product code example
Product code: **NKSD-C 298-8**

type

Dimensions

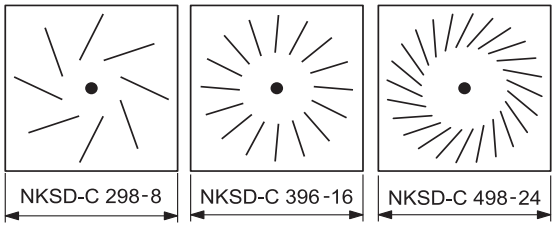

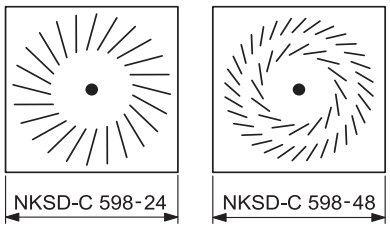

Product code	*Number of blades*
NKSD-C 298-8	8
NKSD-C 396-16	16
NKSD-C 498-24	24
NKSD-C 598-48	48
NKSD-C 623-24	24
NKSD-C 623-48	48

This product is installed with a PRW plenum box in the standard version.

Diffuser size	*Diffuser output (m^3/h)*												
	72	*90*	*108*	*144*	*162*	*180*	*252*	*360*	*450*	*540*	*720*	*900*	*1080*
	Total pressure drop / noise level (Pa/dB(A))												
298-8	5/<20	9/<20	15/20	25/27	×	35/38	70/-47	-	-	-	-	-	-
396-16	-	-	-	-	4<20	8/<20	×	36/37	×	80/55	×	×	×
498-24	-	-	-	-	-	-	10/22	20/33	×	×	70/50	×	170/70
598-24	-	-	-	-	-	-	-	9/21	14/26	20/33	33/42	55/47	80/55
598-48	-	-	-	-	-	-	-	7/<20	9/20	13/25	25/35	50/46	90/50
623-24	-	-	-	-	-	-	-	-	12/24	26/30	38/40	62/42	78/52
623-48	-	-	-	-	-	-	-	-	6/20	12/27	22/37	36/48	80/58

ALNOR® ventilation systems
is a registered trademark protected by a technical patent. All modification rights reserved.

NKSD-CB

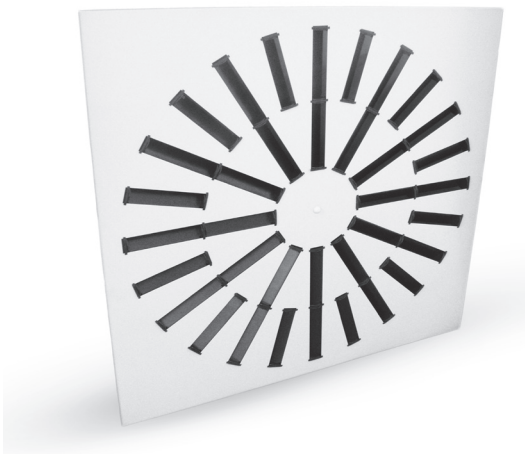

Description

The NKSD-CB swirl diffuser is compatible with low- and medium-pressure air supply systems and spaces with a maximum ceiling height of 4 m. The air is supplied through 24 radially arranged holes.
A great advantage of this diffuser is excellent air distribution performance and low air flow noise.
The diffuser is designed for installation on ducts, plenum (expansion) boxes and as ductwork termination on suspended ceiling. The diffuser features a fixing screw hole in the centre.
The diffusers are light-weight easy-to-install products and require no additional bracing of suspended ceiling panels.
When installed on the PRW plenum box, they provide a uniform air supply, while an insulated version of the plenum box reduces the ductwork and air noise level. The NKSD-CD swirl diffusers come without installation screws.

Available materials — Product code examples
NKSD-CB-...- galvanized steel sheet with powder-coated finish
colour: RAL 9016.

Product code example
Product code: **NKSD-BC-600**

type

Dimensions

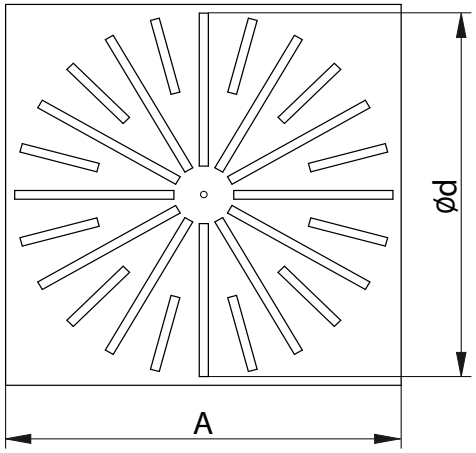

Product code	A x A *(mm)*	Ød *(mm)*
NKSD-CB-600	600	545

This product is installed with a PRW plenum box in the standard version.

ALNOR® ventilation systems
is a registered trademark protected by a technical patent. All modification rights reserved.

Swirl diffusers

NK-SWB



Description

The NK-SWB swirl diffuser directs and distributes the supplied air in the ventilated space. The product is compatible with low- and medium-pressure air supply systems and spaces with a maximum ceiling height of 4 m. The air is distributed via 24 radial guiding vanes. A great advantage of this diffuser is excellent air distribution performance and low air flow noise. The diffuser is designed for installation on ducts, plenum (expansion) boxes and as ductwork termination on suspended ceiling. The diffuser features a fixing screw hole in the centre. The diffusers are light-weight easy-to-install products and require no additional bracing of suspended ceiling panels.
When installed on the PRW plenum box, they provide a uniform air supply, while an insulated version of the plenum box reduces the ductwork and air noise level.
The NK-SWB swirl diffusers come without installation screws.

Material: galvanized steel
Finish: RAL 9016 powder coat

Available materials — Product code examples
NK-SWB-...- galvanized steel sheet with powder-coated finish
colour: RAL 9016

Product code example
Product code: **NK-SWB-600**

type

Dimensions

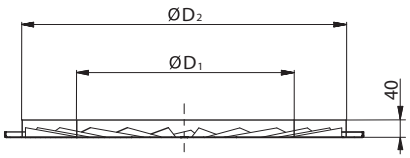

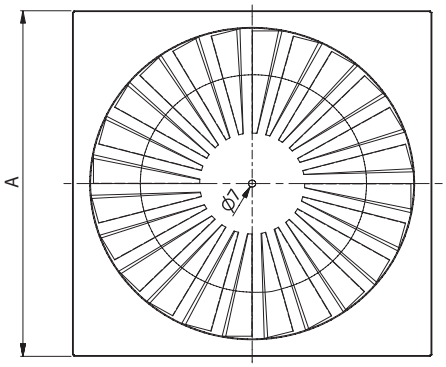

Product code	A x A (mm)	ØD1 (mm)	ØD2 (mm)
NK-SWB-600	597 x 597	315	538

This product is installed with a PRW plenum box in the standard version.

ALNOR® ventilation systems
is a registered trademark protected by a technical patent. All modification rights reserved.

Anemostaty kasetonowe wirowe

NK-SWB

Technical specifications

Selection table

Height	Flow rate		Pressure	Noise	Swirl diffuser arrangement in two or more rows Range			
m	m3/s	m3/h	Pa	dB(A)	B = 2,7 m	B = 3,2 m	B = 3,6 m	B › 4 m
2,7	0,050	180	3	*	0,7	0,7	0,7	0,7
	0,060	216	4	*	1,2	1,0	0,8	0,7
	0,070	252	5	*	1,4	1,2	1,0	0,9
	0,080	288	7	*	1,6	1,3	1,2	1,0
	0,090	324	8	*	1,7	1,4	1,3	1,2
	0,100	360	10	*	1,8	1,5	1,4	1,2
	0,125	450	16	*	1,9	1,7	1,5	1,4
	0,150	540	23	25	2,0	1,8	1,6	1,5
	0,175	630	31	29	2,2	1,9	1,8	1,7
	0,200	720	41	33	2,4	2,2	2,1	2,0
3,0	0,050	180	3	*	0,7	0,7	0,7	0,7
	0,060	216	4	*	0,7	0,7	0,7	0,7
	0,070	252	5	*	1,0	0,8	0,7	0,7
	0,080	288	7	*	1,3	1,1	0,9	0,8
	0,090	324	8	*	1,5	1,2	1,1	0,9
	0,100	360	10	*	1,6	1,3	1,2	1,0
	0,125	450	16	*	1,8	1,5	1,4	1,3
	0,150	540	23	25	1,9	1,7	1,5	1,4
	0,175	630	31	29	2,0	1,7	1,6	1,5
	0,200	720	41	33	2,1	1,8	1,7	1,6
3,6	0,050	180	3	*	0,7	0,7	0,7	0,7
	0,060	216	4	*	0,7	0,7	0,7	0,7
	0,070	252	5	*	0,7	0,7	0,7	0,7
	0,080	288	7	*	0,8	0,7	0,7	0,7
	0,090	324	8	*	0,8	0,7	0,7	0,7
	0,100	360	10	*	1,2	0,9	0,8	0,7
	0,125	450	16	*	1,5	1,2	1,1	1,0
	0,150	540	23	25	1,7	1,4	1,3	1,1
	0,175	630	31	29	1,8	1,6	1,4	1,3
	0,200	720	41	33	1,9	1,6	1,5	1,4

T(m) — range for the air flow rate 0.25 m/s
B(m) — slot row spacing
P(Pa) — pressure drop

ALNOR® ventilation systems
is a registered trademark protected by a technical patent. All modification rights reserved.

Plenum boxes for NKSD-C, NKSD-CB and NK-SWB diffusers

PRW



Description

The PRW plenum boxes connect the ductwork ends to swirl diffusers in low- or medium-pressure ventilation systems. A plenum box stabilizes the air supply, providing uniform air flow rate before the air enters the diffuser. The ductwork is connected to the plenum box inlet port at the side or from above, depending on the product type. The inlet port can be provided with a damper. The PRW plenum box is fitted to the NKSD-C, NKSD-CB or NK-SWB supply diffuser with a rivet nut. ALNOR fabricates plenum boxes lined with flexible and heat-resistant 9 mm thick rubber insulation mats.
Custom plenum boxes manufactured as per customer specifications are also available.

Symbols:
Type of connection:
B — side inlet
G — top inlet
Equipment:
D — with air damper
Insulation:
I — insulated
Material: galvanized steel
Stainless steel version available on request.
Finish:
The standard version is supplied unpainted.
RAL 9016 powder-coated finish is available on request.

Available materials — Product code examples
PRW-...-...-...- galvanized steel sheet
PRW-...-...-...-K - 1.4301/304 stainless steel sheet

Product code example
Product code: **PRW - 298 - B - D - I - Ød**

type
size
connection
equipment
insulation
diameter

Dimensions

Type B — side inlet

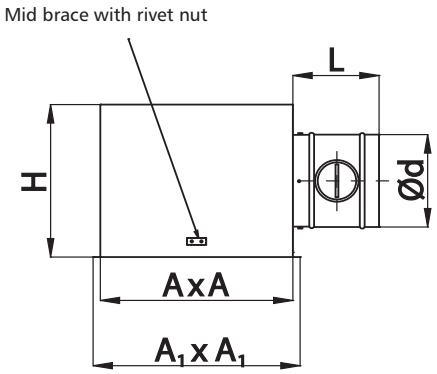

Type G — top inlet

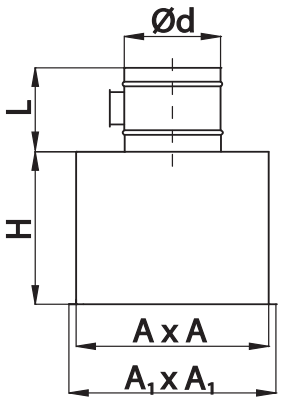

Diffuser type (mm)	*A x A (mm)*	*A_1 x A_1 (mm)*	*H (mm)*	*Max. Ød (mm)*	*Standard Ød (mm)*	*L (mm)*
298	290	-	250	200	160	165
396	360	-	300	250	200	165
498	455	485	300	250	200	165
598-24	550	580	330	250	250	165
598-48	585	-	330	250	250	165
623	580	610	360	315	315	165

ALNOR® ventilation systems
is a registered trademark protected by a technical patent. All modification rights reserved.

Swirl diffusers

NK-SWA

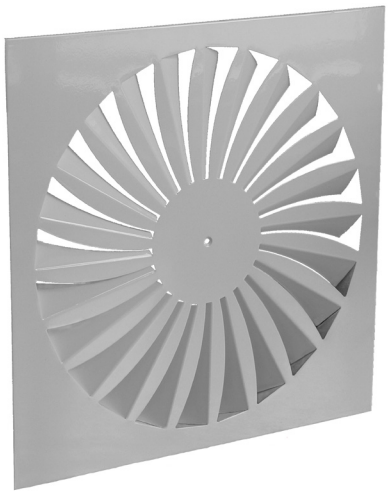

Description

The NK-SWA swirl diffuser directs and distributes the supplied air in the ventilated space. The product is compatible with low- and medium-pressure air supply systems and spaces with a maximum ceiling height of 4 m. The air is distributed via 24 radial guiding vanes.
A great advantage of this diffuser is excellent air distribution performance and low air flow noise.
The diffuser is designed for installation on ducts, plenum (expansion) boxes and as ductwork termination on suspended ceiling. The diffuser features a fixing screw hole in the centre.
The diffusers are light-weight easy-to-install products and require no additional bracing of suspended ceiling panels.
When installed on a plenum box, they provide a uniform air supply, while an insulated version of the plenum box reduces the ductwork and air noise level. The NK-SWA swirl diffusers come without installation screws.

Material: galvanized steel
Finish: RAL 9016 powder-coated

Available materials - Product code examples
NK-SWA-...- galvanized steel sheet with powder-coated finish
colour: RAL 9016.

Product code example
Product code: **NKSWA-600**

type

Dimensions

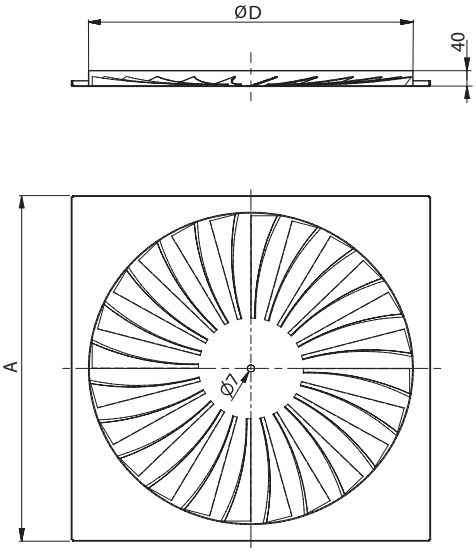

Product code	A x A *(mm)*	*ØD (mm)*
NK-SWA-300	595 x 595	259
NK-SWA-400	595 x 595	339
NK-SWA-500	595 x 595	443
NK-SWA-600	595 x 595	530
NK-SWA-625	625 x 625	530

This product is installed with a PRR plenum box in the standard version.

ALNOR® ventilation systems
is a registered trademark protected by a technical patent. All modification rights reserved.

Swirl diffusers

NK-SWA

Technical specifications

Selection table

		Q (m^3/h)				
		150	180	215	250	325
H (m)	V (m/s)	A (m)				
0.9		0.1	4.0	4.5	5.3	5.7, 6.0
	0.15	—	3.7	4.4	5.0	5.6
	0.2	—	—	—	4.2	5.0
	0.25	—	—	—	—	4.5
1.2	0.1	—	3.8	4.6	5.3	5.7
	0.15	—	—	—	4.1	4.9
	0.2	—	—	—	—	4.0
1.6	0.1	—	—	3.0	4.4	5.2
	0.15	—	—	—	—	4.0
2.0	0.1	—	—	—	3.0	4.6

Exhaust

Size (mm)	Air flow (m^3/h)	Pressure drop (Pa)	Sound level (dB(A))
300	150	16	20
	250	40	35
	350	80	44
400/500	250	8	‹20
	350	16	27
	500	36	40
	700	70	50
	900	120	55
600	350	8.5	‹20
	500	22	26
	700	38	35
	900	65	43

Supply

Size (mm)		Pressure drop (Pa)	Sound level (dB(A))
300	100	6.5	‹20
	150	13	24
	250	35	37
	400	9	53
	500	140	65
400	150	4.5	‹20
	200	9	‹20
	300	18	28
	400	36	38
	500	50	44
500	180	4.5	‹20
	250	8	‹20
	350	15	27
	550	38	42
	700	60	47
600	300	6	‹20
	400	10	22
	600	20	32
	800	38	42
	1200	85	55

Q(m3/h) — volumetric air flow
V (m/s) — air velocity
A(m) — slot row spacing
H(m) — distance from the ceiling to the occupied floor

ALNOR® ventilation systems
is a registered trademark protected by a technical patent. All modification rights reserved.

Plenum boxes for NK-SWA diffusers
PRR



Description

The PRR plenum boxes connect the ductwork ends to the NK-SWA swirl diffusers in low- or medium-pressure ventilation systems.
A plenum box stabilizes the air supply, providing uniform air flow rate before the air enters the diffuser. The ductwork is connected to the plenum box inlet port at the side or from above, depending on the product type. The inlet port can be provided with a damper. ALNOR fabricates plenum boxes lined with flexible and heat-resistant 9 mm thick rubber insulation mats.
Custom plenum boxes manufactured as per customer specifications are also available.

Symbols:
Type of connection:
B — side inlet
G — top inlet
Equipment:
D — with air damper
Insulation:
I — insulated

Available materials — Product code examples
PRR-...-...-...- galvanized steel sheet
PRR-...-...-...- galvanized steel sheet with powder-coated finish
colour: RAL 9016

Product code example
Product code: **PRR - 300 - B - D - I - Ød**

type
size
connection
equipment
insulation
diameter

Dimensions

Type B — side inlet

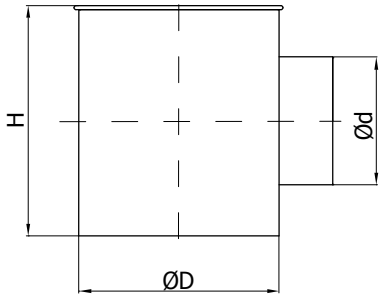

Type G — top inlet

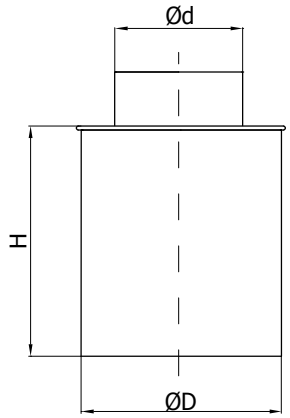

Size	*ØD (mm)*	*Max. Ød (mm)*	*Standard Ød (mm)*	*H (mm)*
300	254	200	125	300
400	336	200	125	300
500	440	250	160	360
600	530	315	200	420
625	530	315	200	420

ALNOR® ventilation systems
is a registered trademark protected by a technical patent. All modification rights reserved.

Mesh screen supply diffusers

RVA

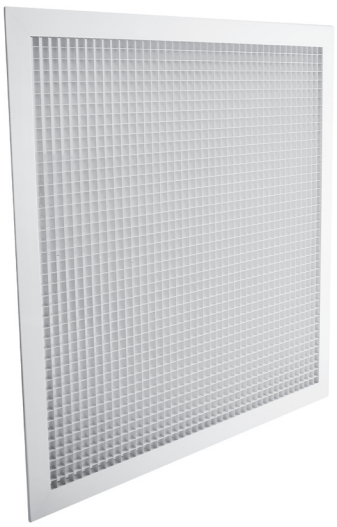

Description

The RVA mesh screen supply diffuser is intended for high air flow ventilation systems. The diffuser is designed for installation on square ducts, plenum (expansion) boxes and as ductwork termination on suspended ceiling. The mesh size is 12.7 x 12.7 mm.
The diffusers are light-weight easy-to-install products and require no additional bracing of suspended ceiling panels.
When installed on the PRW plenum box, they provide a uniform air supply, while an insulated version of the plenum box reduces the ductwork and air noise level.

Material: aluminium
Finish: powder-coated
Standard colours: RAL 9016

Product code example
Product code: **RVA - 595-595**

type
dimension

Dimensions

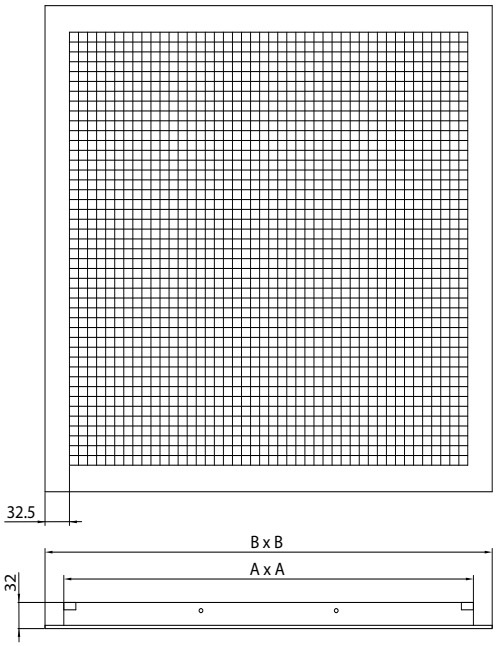

Product code	A x A *(mm)*	*B x B (mm)*
RVA-595-595	545 x 545	595 x 595

ALNOR® ventilation systems
is a registered trademark protected by a technical patent. All modification rights reserved.

Mesh screen supply diffusers

RVA-45

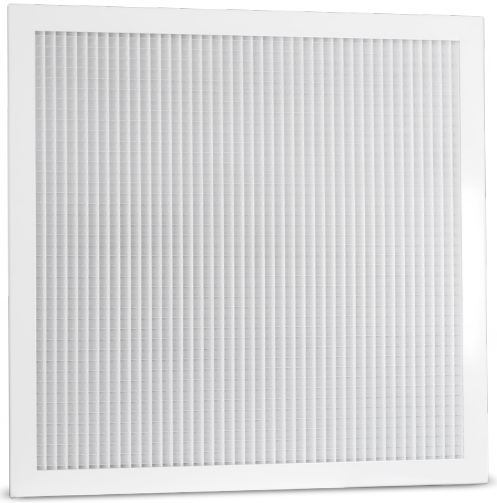

Description

The RVA egg-crate supply/extract diffuser is intended for high air flow ventilation systems. The diffuser is designed for installation on square ducts, plenum boxes and as a ductwork termination on suspended ceiling. The cell size is 12.7 x 12.7 mm. The egg-crate diffusers are light-weight , easy-to-install products and require no additional bracing of suspended ceiling panels.
When installed on the PRW plenum box, the diffusers provide a uniform air supply. When installed on the insulated version of the plenum box, they also attenuate generated noise.



Blades fixed at 45 degree angle, cell size is 12,7 x 12,7 mm.

Material: aluminium
Finish: powder-coated
Standard colours: RAL 9016

Product code example
Product code: **RVA-45 - 595-595**

type
dimension

Dimensions

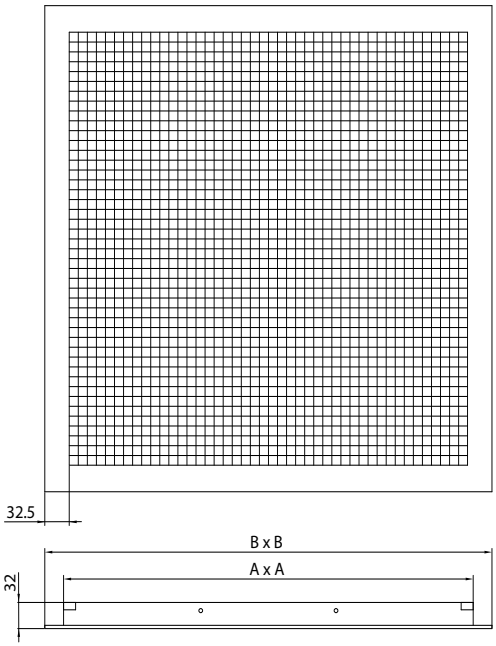

Product code	A x A *(mm)*	*B x B (mm)*
RVA-595-595	545 x 545	595 x 595

ALNOR® ventilation systems
is a registered trademark protected by a technical patent. All modification rights reserved.

Plenum boxes for mesh screen supply diffusers
PRV



Description

The PRV plenum boxes connect the ductwork ends to the mesh screen supply diffusers in high air flow systems.
A plenum box stabilizes the air supply, providing uniform air flow rate before the air enters the diffuser.
The ductwork is connected to the plenum box inlet port at the side or from above, depending on the product type. The inlet port can be provided with a damper.
ALNOR fabricates plenum boxes lined with flexible and heat-resistant 9 mm thick rubber insulation mats. Custom plenum boxes manufactured as per customer specifications are also available.

Symbols:
Type of connection:
B — side inlet
G — top inlet
Equipment:
D — with air damper
Insulation:
I — insulated

Finish:
The standard version is supplied unpainted.
RAL 9016 powder-coated finish is available on request.

Available materials — Product code examples
PRV-...-...-...- galvanized steel sheet
PRV-...-...-...- galvanized steel sheet with powder-coated finish
colour: RAL 9016

Product code example
Product code: **PRV - 595 - B - D - I - Ød**

type
size
connection
equipment
insulation
diameter

Dimensions

Type B — side inlet

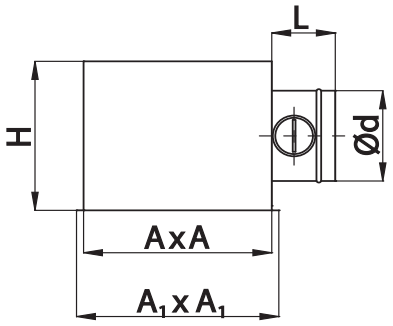

Type G — top inlet

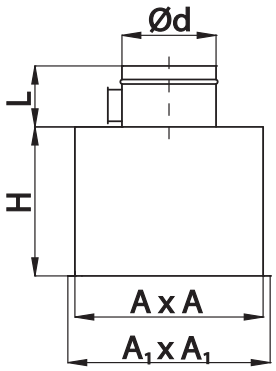

Diffuser type (mm)	*A x A (mm)*	*A_1 x A_1 (mm)*	*H (mm)*	*Max. Ød (mm)*	*Standard Ød (mm)*	*L (mm)*
RVA-595-595	555	585	330	250	250	165

ALNOR® ventilation systems
is a registered trademark protected by a technical patent. All modification rights reserved.

Mesh screen for diffusers
EGG

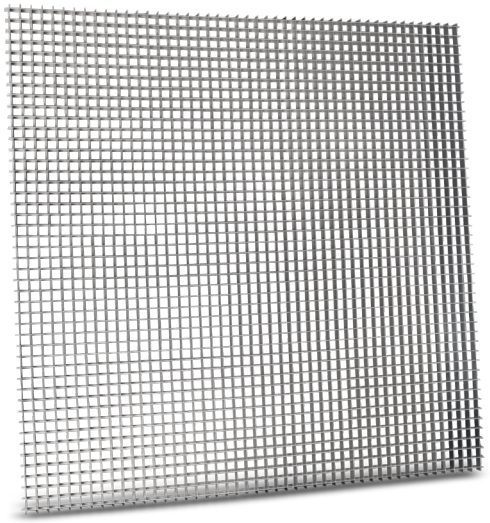

Description

The EGG mesh screen insert can be used to build diffusers (e.g. RVA). The raster can be delivered in two dimensions 1200x1200 mm and 595x59 mm, in the original aluminium finish. The mesh size is 12.7x12.7 mm.

Material: aluminium
Finish: not painted
Standard colours: natural aluminium

Product code example
Product code: **EGG - 595-595**

type
dimension

Dimensions

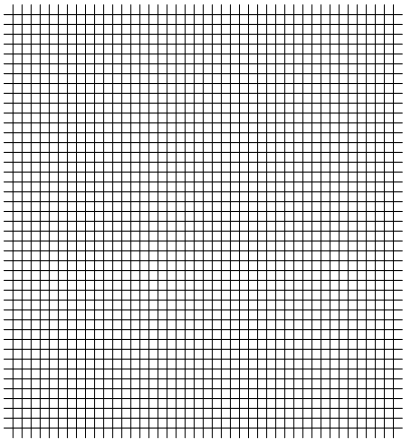

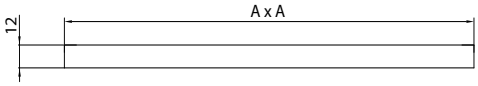

Product code	*A x A (mm)*
EGG-595-595	595 x 595
EGG-1200-1200	1200 1200

ALNOR® ventilation systems
is a registered trademark protected by a technical patent. All modification rights reserved.

Vane swirl diffusers with round face

NKSD-R



Description

The NKSD-R round-face swirl diffuser is designed for low- and medium-pressure ventilation systems. The NKSD-R diffuser features adjustable vanes (16 to 32 vanes, depending on the product type) for setting the uniform air flow direction as required. The diffuser is easy to install and can be fitted with a plenum box. The round-face swirl diffuser can be used in steady and variable air flow systems. The swirl diffuser is installed flush with the ceiling.
When installed on the PRR-SD-R plenum box, they provide a uniform air supply, while an insulated version of the plenum box reduces the ductwork and air noise level.
All diffusers come with two fastening screws, M6x40 and M6x100, a screw cap, a screw hole plug, and a self-adhesive foam gasket.

Available materials - Product code examples
NKSD-R-...-9016 - galvanized steel sheet with powder-coated finish colour: RAL 9016

Material: galvanized steel
Finish: RAL 9016 powder-coated

Product code example
Product code: **NKSD-R-400**

type _____

Dimensions

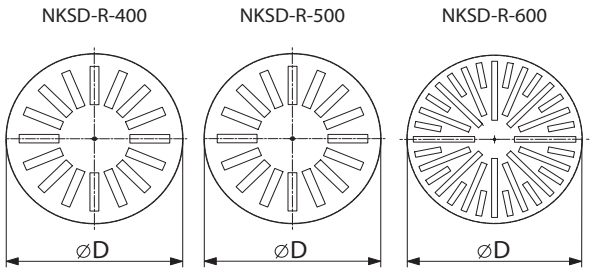

Product code	*ØD*	*Number of blades*
NKSD-R-400	400	16
NKSD-R-500	500	16
NKSD-R-600	600	32

ALNOR® ventilation systems
is a registered trademark protected by a technical patent. All modification rights reserved.

NKSD-R

Technical specifications

Selection charts

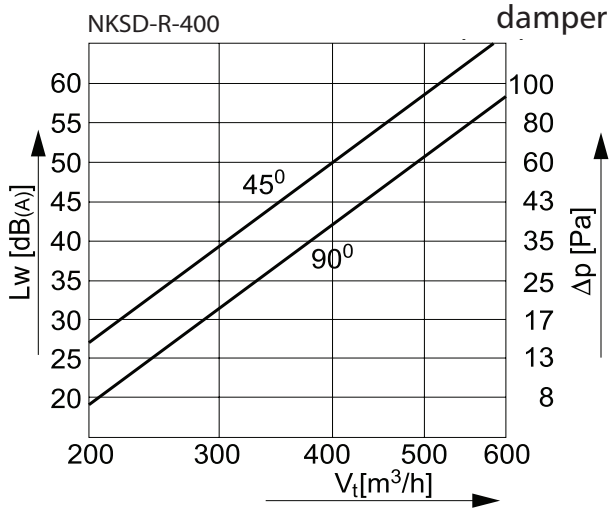

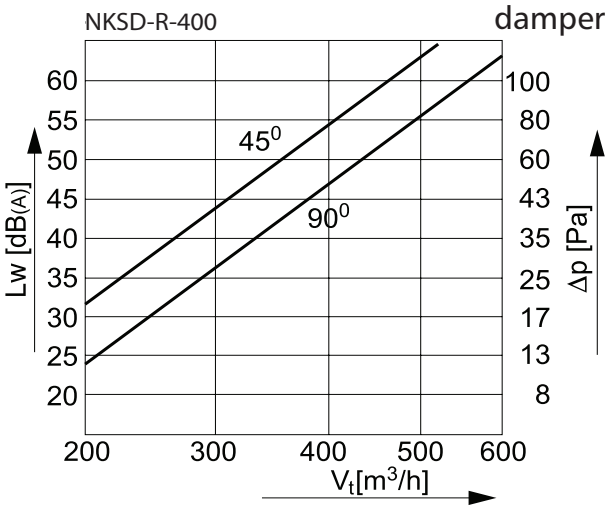

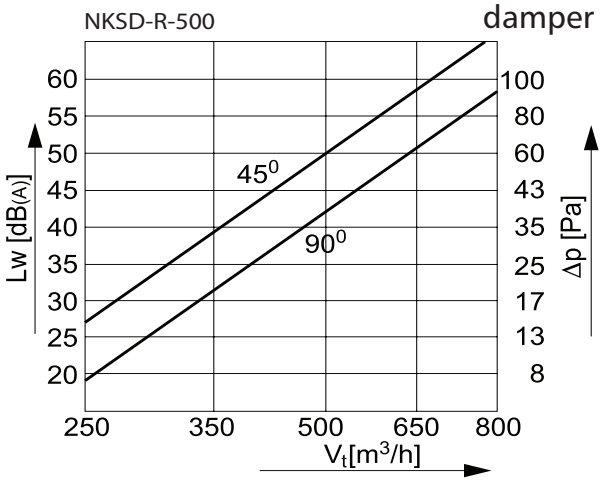

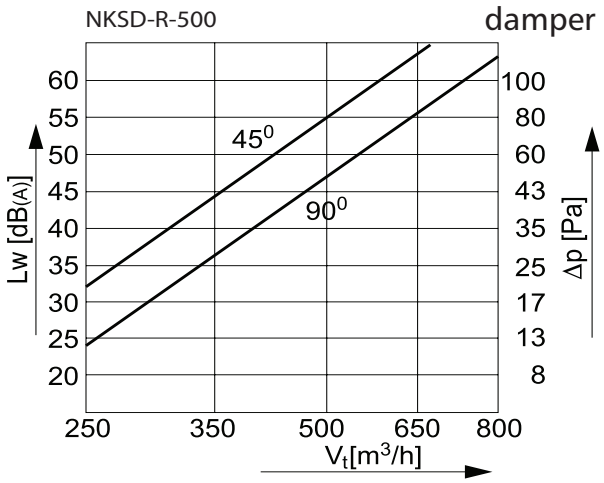

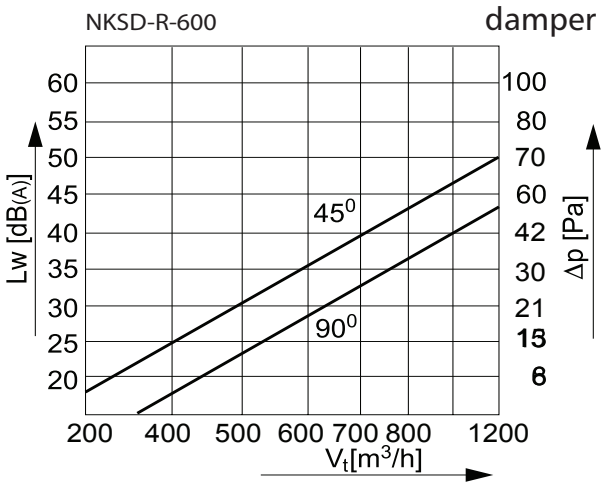

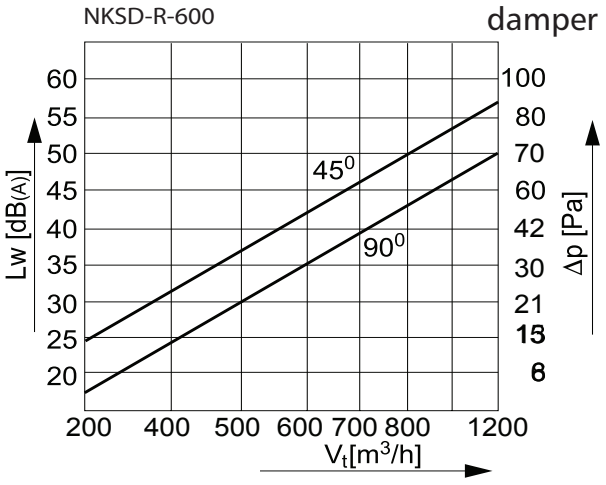

ALNOR® ventilation systems
is a registered trademark protected by a technical patent. All modification rights reserved.

Plenum boxes for NKSD-R diffusers

PRR-SD-R

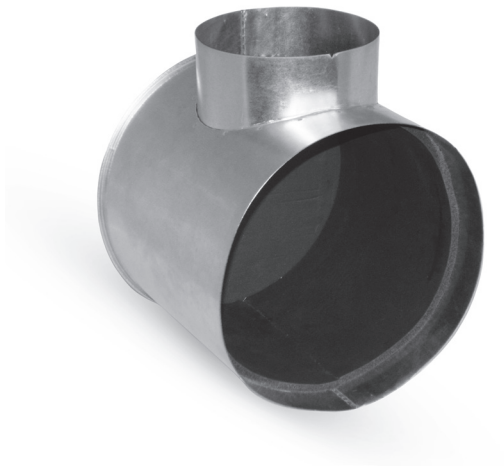

Description

The PRR-SD-R plenum boxes connect the ductwork ends to the NKSD-R round-face vane swirl diffusers in low- or medium-pressure ventilation systems. A plenum box stabilizes the air supply, providing uniform air flow rate before the air enters the diffuser. The ductwork is connected to the plenum box inlet port at the side or from above, depending on the product type. The inlet port can be provided with a damper.
ALNOR fabricates plenum boxes lined with flexible and heat-resistant 9 mm thick rubber insulation mats. Custom plenum boxes manufactured as per customer specifications are also available.

Symbols:
Type of connection:
B — side inlet
G — top inlet
Equipment:
D — with air damper
Insulation:
I — insulated

Material: galvanized steel
Stainless steel version available on request.
Finish:
The standard version is supplied unpainted.
RAL 9016 powder-coated finish is available on request.

Available materials — Product code examples
PRR-SD-R-...-...-... - galvanized steel sheet
PRR-...-...-...-K - 1.4301/304 stainless steel sheet

Product code example
Product code: **PRR-SD-R - 300 - B - D - I - Ød**

type
size
connection
equipment
insulation
diameter

Dimensions

Type B — side inlet

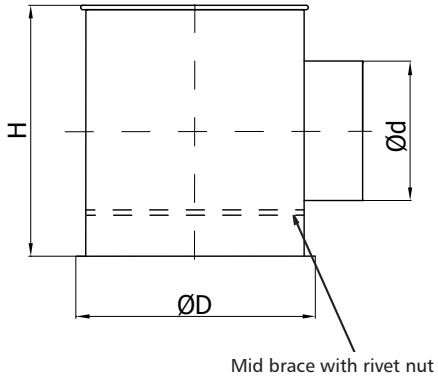

Type G — top inlet

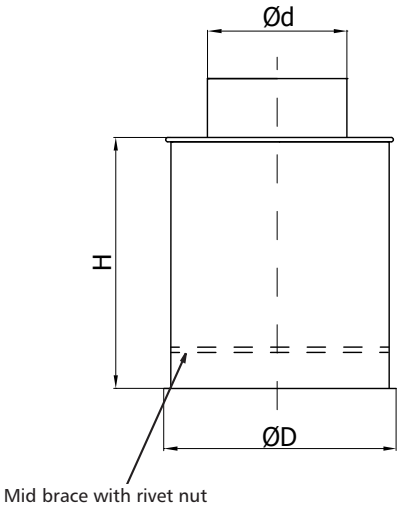

ALNOR® ventilation systems
is a registered trademark protected by a technical patent. All modification rights reserved.

Round vane supply diffusers
NCD



Description

The NCD round vane supply diffusers are compatible with low- and medium-pressure ventilation systems as well as A/C air supply and exhaust ducts. They can be used in steady and variable air flow systems. The diffuser can supply air in the horizontal or vertical direction at a temperature higher or lower than the room temperature.
The diffusers are light-weight and easy-to-install products. The diffusers can be installed with PRO plenum boxes or RM-NCD mounting frames. When installed on the PRO plenum box, they provide a uniform air supply, while an insulated version of the plenum box reduces the ductwork and air noise level.

Material: aluminium
Finish: powder-coated
Standard colours: RAL 9016

Available materials - Product code examples
NCD-...- 9016 - aluminium sheet with powder-coated finish
colour: RAL 9016

Product code example
Product code **NCD - aaa**

type
size

Dimensions

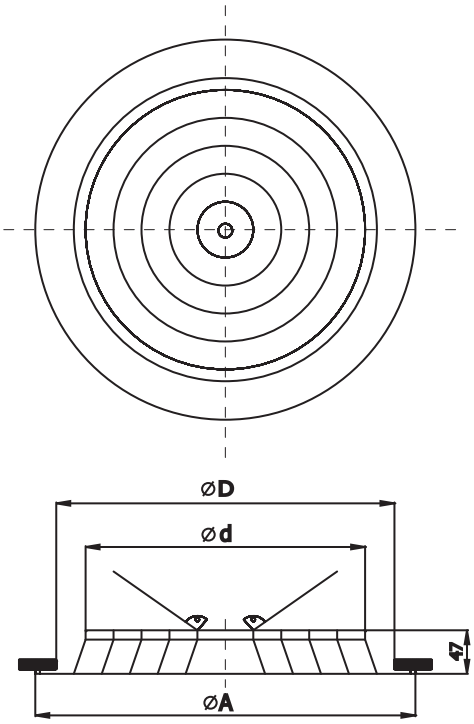

Size	ØA (mm)	Ød (mm)	ØD (mm)
150	258	146	228
200	307	199	275
250	360	245	335
300	409	299	378
350	460	347	423

Mounted to PRO or PRR-CD plenum boxes or RM NCD mounting frames as standard.

ALNOR® ventilation systems
is a registered trademark protected by a technical patent. All modification rights reserved.

Round vane supply diffusers
NCD

Technical specifications

Selection tables

Capacity (m^3/h)	Size	150	200	250	300	350
	Speed v (m/s)	2,75	1,2	0,77	0,54	0,4
	Ps (Pa)	7	3	2	2	2
100	Tmin (m)	0,5	0,33	0,27	0,22	0,19
	Tmax (m)	0,92	0,7	0,61	0,55	0,51
	NC (dB(A))	‹15	‹15	‹15	‹15	‹15
	Speed v (m/s)	4,12	1,79	1,16	0,81	0,6
	Ps (Pa)	13	4	3	2	2
150	Tmin (m)	0,75	0,49	0,4	0,33	0,29
	Tmax (m)	1,25	0,92	0,79	0,7	0,64
	NC (dB(A))	‹15	‹15	‹15	‹15	‹15
	Speed v (m/s)	5,5	2,39	1,55	1,08	0,81
	Ps (Pa)	22	6	3	3	2
200	Tmin (m)	1	0,66	0,53	0,44	0,38
	Tmax (m)	1,59	1,13	0,96	0,85	0,77
	NC (dB(A))	‹15	‹15	‹15	‹15	‹15
	Speed v (m/s)	6,87	2,99	1,94	1,35	1,01
	Ps (Pa)	33	8	4	3	3
250	Tmin (m)	1,24	0,82	0,66	0,55	0,48
	Tmax (m)	1,92	1,35	1,14	0,99	0,89
	NC (dB(A))	32	18	‹15	‹15	‹15
	Speed v (m/s)	8,25	3,59	2,32	1,61	1,21
	Ps (Pa)	47	10	5	4	3
300	Tmin (m)	1,49	0,99	0,79	0,66	0,57
	Tmax (m)	2,25	1,57	1,32	1,14	1,02
	NC (dB(A))	37	24	‹15	‹15	‹15
	Speed v (m/s)	9,62	4,18	2,71	1,88	1,41
	Ps (Pa)	63	13	7	4	3
350	Tmin (m)	1,74	1,15	0,93	0,77	0,67
	Tmax (m)	2,58	1,79	1,49	1,29	1,15
	NC (dB(A))	41	28	18	‹15	‹15
	Speed v (m/s)	10,99	4,78	3,1	2,15	1,61
	Ps (Pa)	82	17	8	5	4
400	Tmin (m)	1,99	1,31	1,06	0,88	0,76
	Tmax (m)	2,91	2,01	1,67	1,43	1,28
	NC (dB(A))	45	32	21	‹15	‹15
	Speed v (m/s)	12,37	5,38	3,49	2,42	1,81
	Ps (Pa)	103	21	10	6	4
450	Tmin (m)	2,24	1,48	1,19	0,99	0,86
	Tmax (m)	3,24	2,23	1,84	1,58	1,4
	NC (dB(A))	48	35	25	16	‹15
	Speed v (m/s)		5,98	3,87	2,69	2,02
	Ps (Pa)		26	12	7	5
500	Tmin (m)		1,64	1,32	1,1	0,95
	Tmax (m)		2,45	2,02	1,73	1,53
	NC (dB(A))		38	28	19	‹15

ALNOR® ventilation systems
is a registered trademark protected by a technical patent. All modification rights reserved.

Technical specifications

Selection tables

Capacity (m^3/h)	Size	150	200	250	300	350
	Speed v (m/s)		7,17	4,65	3,23	2,42
	Ps (Pa)		36	16	9	6
600	Tmin (m)		1,97	1,59	1,32	1,14
	Tmax (m)		2,88	2,37	2,02	1,78
	NC (dB(A))		43	33	24	17
	Speed v (m/s)		8,37	5,42	3,37	2,82
	Ps (Pa)		48	21	11	7
700	Tmin (m)		2,3	1,85	1,54	1,33
	Tmax (m)		3,32	2,72	2,31	2,04
	NC (dB(A))		47	37	29	21
	Speed v (m/s)			6,2	4,31	3,22
	Ps (Pa)			27	14	9
800	Tmin (m)			2,11	1,76	1,52
	Tmax (m)			3,08	2,61	2,29
	NC (dB(A))			41	32	25
	Speed v (m/s)			6,97	4,84	3,67
	Ps (Pa)			34	17	10
900	Tmin (m)			2,38	1,98	1,72
	Tmax (m)			3,43	2,9	2,55
	NC (dB(A))			44	36	29
	Speed v (m/s)			7,75	5,38	4,03
	Ps (Pa)			41	21	13
1000	Tmin (m)			2,64	2,2	1,91
	Tmax (m)			3,78	3,19	2,8
	NC (dB(A))			8,52	39	32
	Speed v (m/s)			5,08	5,92	4,43
	Ps (Pa)			29	25	15
1100	Tmin (m)			2,96	2,42	2,1
	Tmax (m)			4,13	3,49	3,05
	NC (dB(A))			50	41	34
	Speed v (m/s)				6,46	4,84
	Ps (Pa)				29	17
1200	Tmin (m)				2,64	2,29
	Tmax (m)				3,78	3,31
	NC (dB(A))				44	37
	Speed v (m/s)				7	5,24
	Ps (Pa)				34	20
1300	Tmin (m)				2,86	2,48
	Tmax (m)				4,07	3,56
	NC (dB(A))				46	39
	Speed v (m/s)					6,05
	Ps (Pa)					26
1500	Tmin (m)					2,86
	Tmax (m)					4,07
	NC (dB(A))					43

ALNOR® ventilation systems
is a registered trademark protected by a technical patent. All modification rights reserved.

Plenum boxes for NCD diffusers
PRO



Description

The PRO plenum boxes connect the ductwork ends to round vane supply diffusers in low- or medium-pressure ventilation systems.
A plenum box stabilizes the air supply, providing uniform air flow rate before the air enters the diffuser. The ductwork is connected to the plenum box inlet port at the side or from above, depending on the product type. The inlet port can be provided with a damper.
ALNOR fabricates plenum boxes lined with flexible and heat-resistant 9 mm thick rubber insulation mats. Custom plenum boxes manufactured as per customer specifications are also available.

Symbols:
Connection:
B — side inlet
G — top inlet
Equipment:
D — with air damper
Insulation:
I — insulated

Material: galvanized steel
Stainless steel version available on request.
Finish:
The standard version is supplied unpainted.
RAL 9016 powder-coated finish is available on request.

Available materials — Product code examples
PRO-...-...-...-...-... - galvanized steel sheet
PRO-...-...-...-...-...-K - 1.4301/304 stainless steel sheet

Product code example
Product code: **PRO - 150 - B - D - I - Ød**

type
size
connection
equipment
insulation
diameter

Dimensions

Type B — side inlet

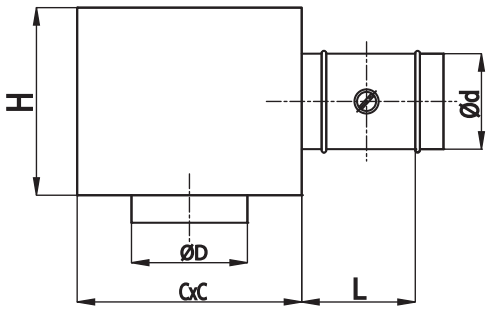

Type G — top inlet

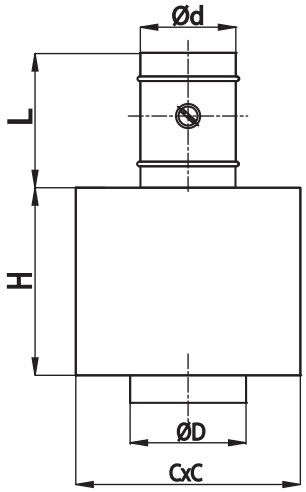

ALNOR® ventilation systems
is a registered trademark protected by a technical patent. All modification rights reserved.

Plenum boxes for NCD diffusers

PRR-CD

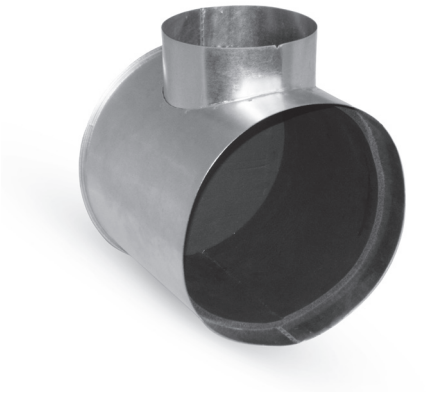

Description

The PRR-CD plenum boxes connect the ductwork ends to the NCD round supply diffusers in low- or medium-pressure ventilation systems.
A plenum box stabilizes the air supply, providing uniform air flow rate before the air enters the diffuser. The ductwork is connected to the plenum box inlet port at the side or from above, depending on the product type. The inlet port can be provided with a damper. ALNOR fabricates plenum boxes lined with flexible and heat-resistant 9 mm thick rubber insulation mats. Custom plenum boxes manufactured as per customer specifications are also available.

Symbols:
Connection:
B — side inlet
G — top inlet
Equipment:
D — with air damper
Insulation:
I — insulated

Material: galvanized steel
Stainless steel version available on request.
Finish:
The standard version is supplied unpainted.
RAL 9016 powder-coated finish is available on request.

Available materials — Product code examples
PRR-CD-...-...-...-... - galvanized steel sheet
PRR-CD-...-...-...-...-K - 1.4301/304 stainless steel sheet

Product code example
Product code: **PRR-CD - 300 - B - D - I - Ød**

type
size
connection
equipment
insulation
diameter

Dimensions

Type B — side inlet

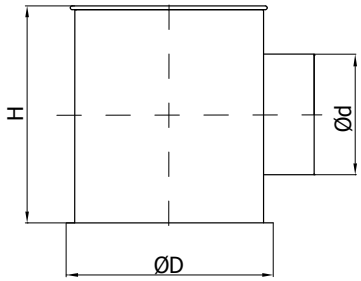

Type G — top inlet

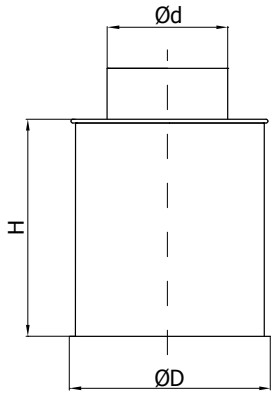

Size	*ØD (mm)*	*Max. Ød (mm)*	*Standard Ød (mm)*	*H (mm)*
150	220	160	125	200
200	270	200	125	250
250	320	200	160	250
300	370	250	160	300
350	420	250	160	300

ALNOR® ventilation systems
is a registered trademark protected by a technical patent. All modification rights reserved.

NCD diffuser mounting frame for connecting to ducts and fittings

RM-NCD

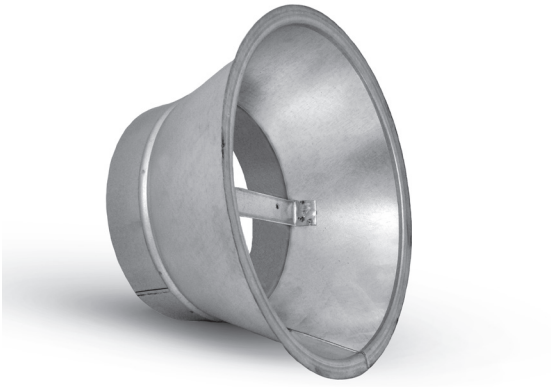

Description

The NCD round vane supply diffuser is made from galvanized steel sheet and fitted to the diffuser with two screws supplied with the product. The screws are driven in the frame mid brace; the flange is pressed down to the foam gasket to stabilize the joint between the parts. The product is used when a plenum box is not required.

Available materials — Product code examples
RM-NCD-...-...- galvanized steel sheet
RM-NCD-...-...-K - 1.4301/304 stainless steel sheet

Product code example
Product code: **RM-CND - 150 - 125**

type
diffuser type
Ø of duct

Dimensions

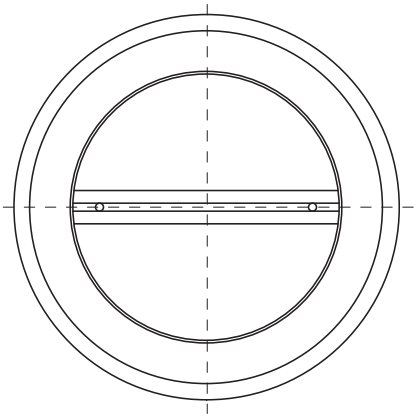

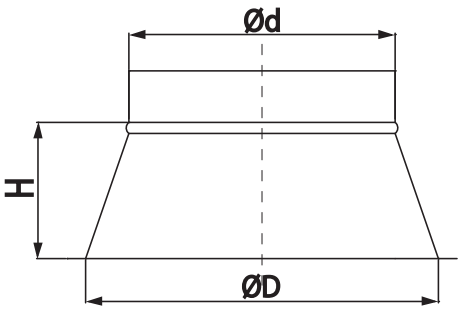

Product code	*Diffuser type*	*d of duct (mm)*	*D (mm)*	*H (mm)*

ALNOR® ventilation systems
is a registered trademark protected by a technical patent. All modification rights reserved.

Ball jet diffuser
KHA

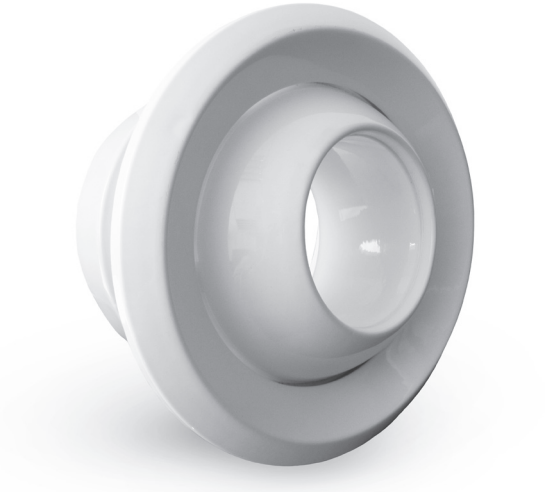

Description

The KHA ball jet diffuser is intended for supplying fresh air to high and very large areas, including theatre halls, cinema auditoria, or industrial bays. The high volumetric air flow from the diffuser has a low sound pressure level and provides a very long air flow range.
The ball jet diffuser can be installed for supplying air either horizontally or vertically.
The ball jet nozzle can be adjusted in any direction within 30° from the centreline without affecting the air flow resistance or the sound pressure level.
The KHA ball jet diffuser has a male inward connection.

Material: aluminium
Finish: RAL 9016 powder-coated
Standard colour: white

Available materials — Product code examples
KHA-...- RAL 9016 powder coat

Product code example
Product code: **KHA - aaa**

type
$ØD_1$

Dimensions

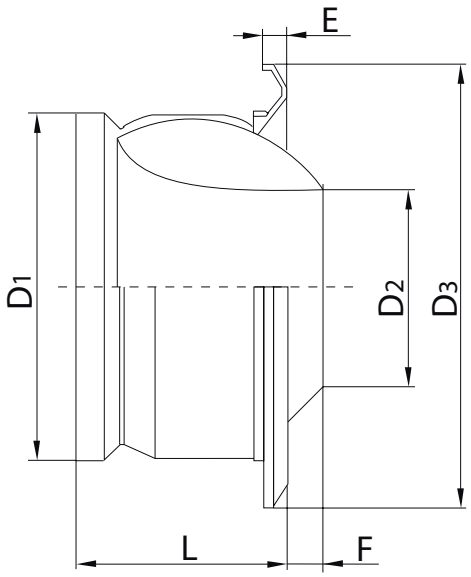

$ØD_1$ (mm)	$ØD_2$ (mm)	$ØD_3$ (mm)	E (mm)	F (mm)	L (mm)
100	55	148	20	-2	95
125	64	185	10	4	89
160	82	210	21	10	123
200	108	273	16	14	127
250	135	301	24	17	175
315	180	380	25	30	180
400	230	483	24	47	223
500	255	625	47	50	270

ALNOR® ventilation systems
is a registered trademark protected by a technical patent. All modification rights reserved.

Ball jet diffuser
KHA

Technical specifications

Dimension [mm]	*Air flow range*									*V [m/s]*
	10 m			*20 m*			*30 m*			
	q [m³/h]	*Pressure drop [Pa]*	*L_A dB(A)*	*q [m³/h]*	*Pressure drop [Pa]*	*L_A dB(A)*	*q [m³/h]*	*Pressure drop [Pa]*	*L_A dB(A)*	
100	-	-	-	95	86	29	140	175	39	
125	-	-	-	124	71	25	180	136	36	
160	83	11	<20	162	26	<20	250	98	35	
200	100	-	<20	221	29	<20	306	69	27	0,25
250	135	-	<20	276	8.3	<20	382	31	22	
315	180	-	<20	352	11	<20	540	39	20	
400	234	-	<20	468	8.0	<20	702	13	<20	
500	279	-	<20	527	6.5	<20	865	8	<20	
100	94	86	29	181	300	50	-	-	-	
125	122	71	25	240	264	46	-	-	-	
160	165	26	<20	330	115	44	497	200	55	
200	220	29	<20	439	120	38	655	218	50	0,5
250	274	8.3	<20	541	60	34	825	112	45	
315	350	11	<20	682	55	28	1055	104	40	
400	460	8	<20	914	32	20	1394	69	33	
500	545	6	<20	1233	21	15	1650	45	28	
100	187	300	50	-	-	-	-	-	-	
125	249	265	42	-	-	-	-	-	-	
160	330	113	44	-	-	-	-	-	-	
200	435	123	38	875	312	-	-	-	-	1,0
250	548	63	34	1100	160	53	-	-	-	
315	700	57	28	1400	150	48	2100	243	-	
400	930	32	20	1860	123	42	2796	265	50	
500	1146	26	14	2245	95	37	3280	290	49	

L_AdB(A) - noise level
q (m³/h) - volumetric flow rate
V (m/s) - air velocity

ALNOR® ventilation systems
is a registered trademark protected by a technical patent. All modification rights reserved.

Round vane supply diffusers
ITG

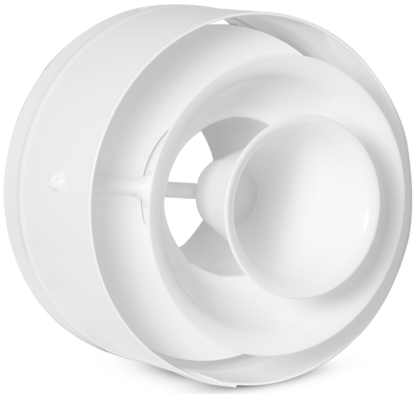

Description

The ITG long-range round vane supply diffuser is designed for providing high air supply rate. The temperature of the air supplied can be lower by up to 12°C than the indoor temperature. This enables using ITG diffusers in cold storage rooms. The air flow angle can be adjusted in the range of 15° to 30°. The air flow cohesion can be adjusted by rotating the diffuser by 180° in either direction.

Material: galvanized steel sheet
Finish: powder-coated
Standard colours: RAL 9010
All RAL palette colours are available on request.

Available materials — Product code examples
ITG-...- steel sheet, powder-coated finish colour: RAL 9010

Product code example
Product code: **ITG - aaa**

type
size

Dimensions

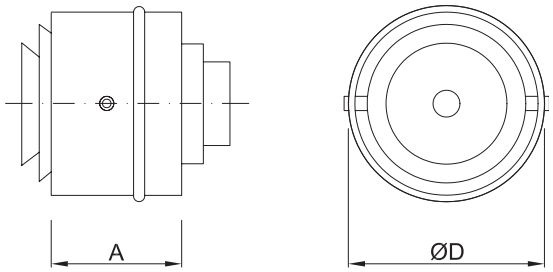

Size	*A (mm)*	*ØD (mm)*	*number of rings (pcs)*
200	115	198	2
250	115	248	2
315	115	313	3
400	115	398	3
500	115	498	4

ALNOR® ventilation systems
is a registered trademark protected by a technical patent. All modification rights reserved.

Round vane supply diffusers

ITG

Technical specifications

Selection charts

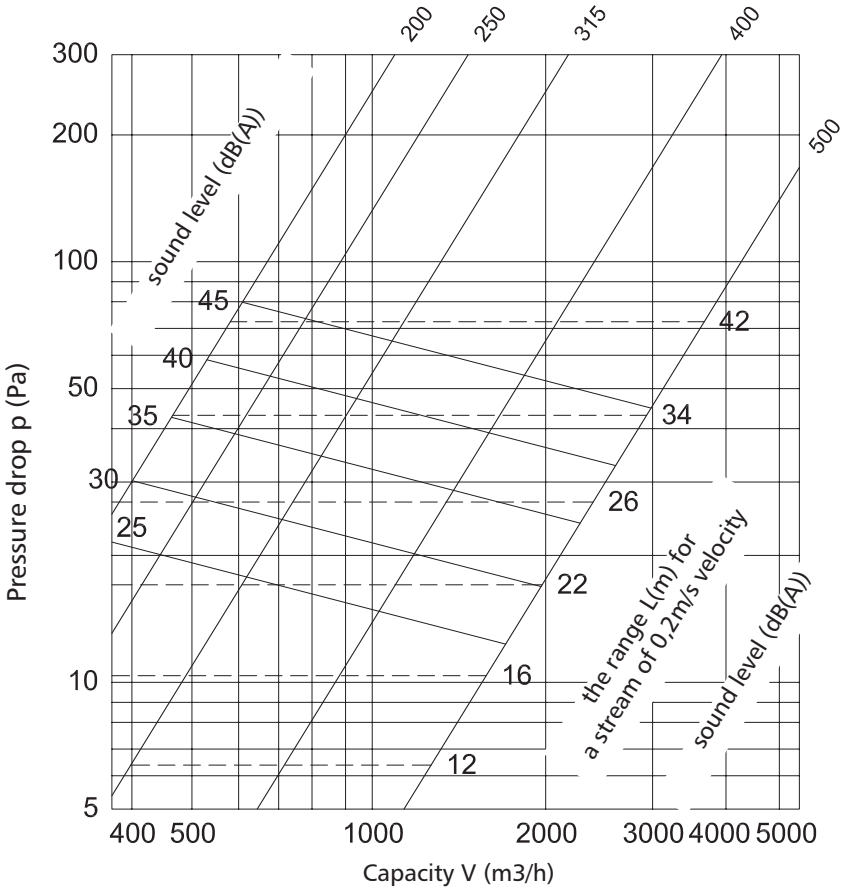

ALNOR® ventilation systems
is a registered trademark protected by a technical patent. All modification rights reserved.

Linear slot diffusers
LDS



Description

The LDS linear slot diffuser are intended for ceiling or wall installation. The product can supply warm or cold air. The diffuser can feature from 1 to 4 slots, 495 mm or 990 mm in length, depending on the product version. Each slot enables separate air flow direction adjustment and is provided with two deflector vanes. This design enables easy adaptation of the air flow diffusion direction according to actual indoor conditions.
With this easy adjustment functionality, the LDS linear slot diffusers are ideal for variable air output ventilation systems.

Material: aluminium
Finish: RAL 9016 powder-coated
Standard colour: white

Product code example
Product code: **LDS - 1 - 495**

type
number of slots
length

Dimensions

LDS-1-495

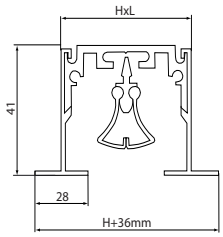

LDS-2-495/LDS-2-990

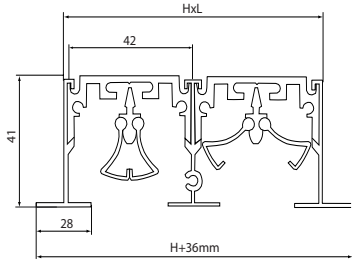

LDS-3-990

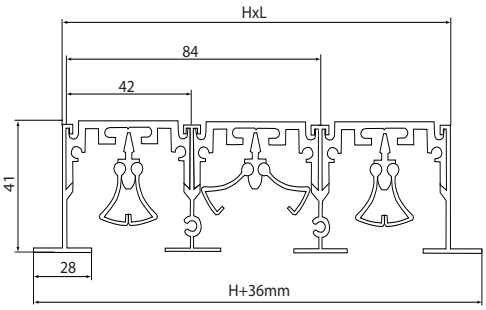

LDS-4-990

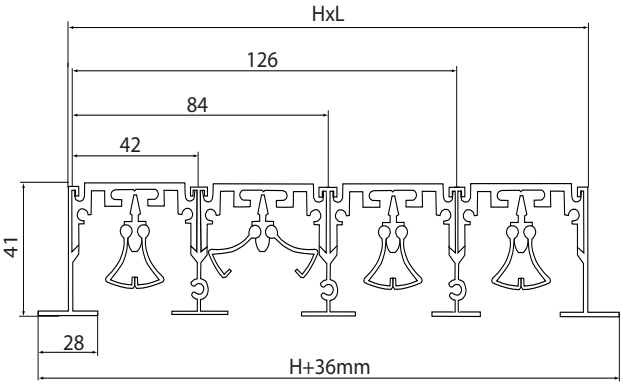

Product code	*H (mm)*	*L (mm)*	*Number of slots (pcs)*
LDS-1-495	44	490	1
LDS-2-495	88	490	2
LDS-2-990	88	985	2
LDS-3-990	132	985	3
LDS-4-990	176	985	4

ALNOR® ventilation systems
is a registered trademark protected by a technical patent. All modification rights reserved.

Linear slot diffusers
LDS

Technical specifications

Selection table

number of slots (mm)		*Characteristics*								
1	V (m^3/h)	39	73	112	145	184	223	257	296	329
1	T_{horiz} (m)	0-1-2	1-2-5	2-4-6	3-5-7	4-6-8	5-6-9	5-7-10	6-7-10	6-8-11
1	T_{vert} (m)	1	2	4	4	5	5	5	6	6
1	PS (Pa)	1	3,6	8,1	14,5	22,6	32,5	44,2	57,9	73,2
1	NC (dB)			13	20	26	30	34	37	40
2	V (m^3/h)	73	145	223	296	368	441	513	591	664
2	T_{horiz} (m)	0-1-4	2-4-7	4-5-9	5-7-10	6-8-12	7-9-13	8-10-14	9-10-15	9-11-16
2	T_{vert} (m)	2	3	5	6	7	7	8	9	9
2	PS (Pa)	1	3,6	8,1	14,5	22,6	32,5	44,2	57,9	73,2
2	NC (dB)			16	23	29	33	37	40	43
3	V (m^3/h)	112	223	329	441	552	664	776	882	993
3	T_{horiz} (m)	1-2-4	2-4-9	4-6-11	6-9-13	7-10-14	9-11-16	10-12-17	10-13-18	11-13-19
3	T_{vert} (m)	2	4	6	7	8	9	10	10	11
3	PS (Pa)	1	3,6	8,1	14,5	22,6	32,5	44,2	57,9	73,2
3	NC (dB)			18	25	30	35	39	42	45
4	V (m^3/h)	145	296	441	591	737	882	1032	1177	1328
4	T_{horiz} (m)	1-2-5	3-5-10	5-7-13	7-10-15	8-12-16	10-13-18	11-14-19	12-15-21	13-16-22
4	T_{vert} (m)	2	5	7	9	9	10	11	12	13
4	PS (Pa)	1	3,6	8,1	14,5	22,6	32,5	44,2	57,9	73,2
4	NC [dB]			19	26	32	36	40	43	46

NC (dB) — correction factors for length multiplication					
Multiple of module length	2	4	6	8	10
Air supply	-3	0	+2	+3	+5
Exhaust	0	+3	+5	+6	+8
T (m) — correction factors for length multiplication					
Multiple of module length	2	4	8	10	12
Correction factor for air flow range	0.72	1.0	1.5	1.7	1.8

V (m^3/h) - volumetric flow rate
T horiz [m] - horizontal air flow range at air velocities of 0.75 m/s, 0.50 m/s, and 0.25 m/s respectively
T vert [m] - vertical air flow range at air velocities of 0.75 m/s, 0.50 m/s, and 0.25 m/s respectively
PS (Pa) - static pressure
NC (dB) - noise level for room attenuation ratio 10 dB

Note: The above parameters refer to a 1 m long linear slot diffuser module.

ALNOR® ventilation systems
is a registered trademark protected by a technical patent. All modification rights reserved.

Custom-length linear slot diffuser modules

LDS-2-O/LDS-3-O



Description

Ventilation systems frequently require very long slot diffusers with modules for installation at and along wall corners. Such air supply systems need customizable components for on-site fabrication and installation of supply diffusers of non-standard length.

LDS-2-O / LDS-3-O — 2 or 3 slot diffuser with open side ends. The linear slot diffuser kit features struts for securing the top, middle and bottom ledges together and a set of metal inserts for joining the diffuser modules side by side.

Material: aluminium
Finish: RAL 9016 powder-coated
Standard colour: white

Product code example
Product code: **LDS-3-O - 495**

type
number of slots
length

Dimensions

LDS-2-O



LDS-3-O

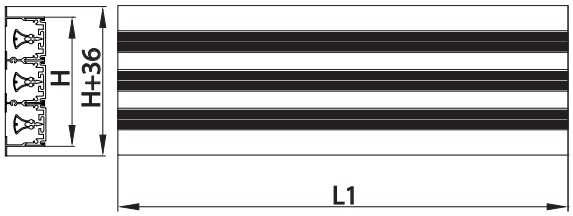

Product code	*L_1 (mm)*	*H (mm)*	*Number of slots (pcs)*	*Number of L-20 strut bars (pcs)*	*Number of L-4 inserts (pcs)*
LDS-2-O	495	88	2	3	2
LDS-2-O	990	88	2	3	2
LDS-3-O	495	132	3	4	2
LDS-3-O	990	132	3	4	2

ALNOR® ventilation systems
is a registered trademark protected by a technical patent. All modification rights reserved.

Custom-length linear slot diffuser modules

LDS-2-B/LDS-3-B

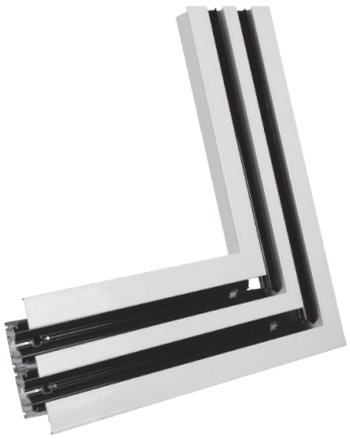

Description

Ventilation systems frequently require very long slot diffusers with modules for installation at and along wall corners. Such air supply systems need customizable components for on-site fabrication and installation of supply diffusers of non-standard length.

LDS-2-B / LDS-3-B — linear slot diffuser corner piece with 2 or 3 slots. The 90-degree angle form helps routing the diffuser output along the room corners. This allows building an air supply diffuser arrangement in suspended ceilings right next to walls and windows.

Material: aluminium
Finish: RAL 9016 powder-coated
Standard colour: white

Product code example

Product code: **LDS-2-B - 495**

type
number of slots
length

Dimensions

LDS-2-B

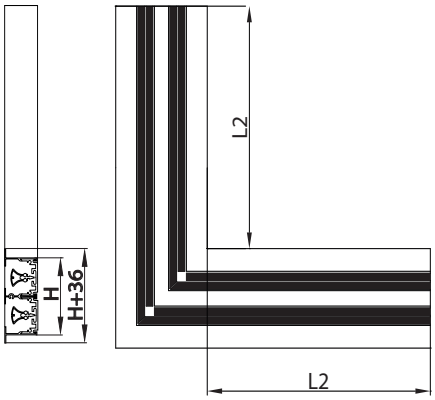

LDS-3-B

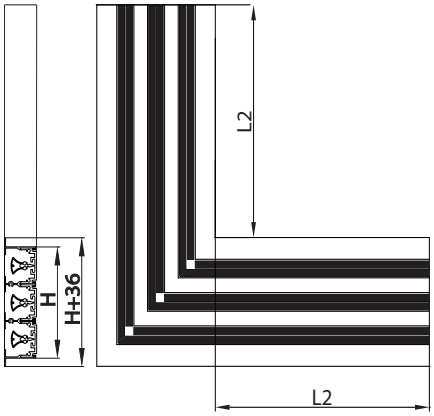

Product code	*L_1 (mm)*	*H (mm)*	*Number of slots (pcs)*	*Number of L-20 strut bars (pcs)*	*Number of L-4 inserts (pcs)*
LDS-2-B	300	88	2	3	2
LDS-3-B	300	132	3	4	2

ALNOR® ventilation systems
is a registered trademark protected by a technical patent. All modification rights reserved.

Custom-length linear slot diffuser modules

LDS-2-C/LDS-3-C



Description

Ventilation systems frequently require very long slot diffusers with modules for installation at and along wall corners. Such air supply systems need customizable components for on-site fabrication and installation of supply diffusers of non-standard length.

LDS-2-C / LDS-3-C — 2 or 3 slot diffuser end cap. The product fits straight linear slot diffuser modules and LDS-...-B corner pieces. Screws included.

Material: aluminium
Finish: RAL 9016 powder-coated
Standard colour: white

Product code example
Product code: **LDS-3-C - 495**

type
number of slots
length

Dimensions

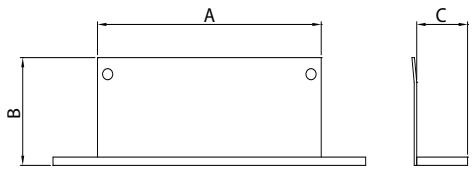

Product code	*A (mm)*	*B (mm)*	*C (mm)*

Installation method

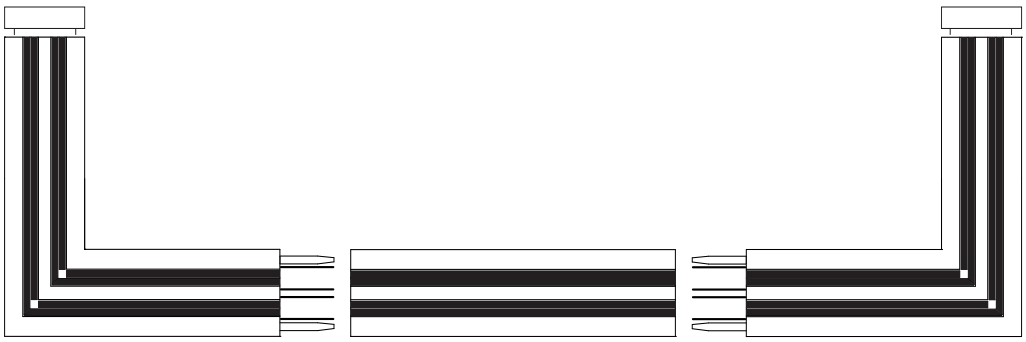

ALNOR® ventilation systems
is a registered trademark protected by a technical patent. All modification rights reserved.

Plenum boxes for LDS linear slot diffusers

PR-LDS

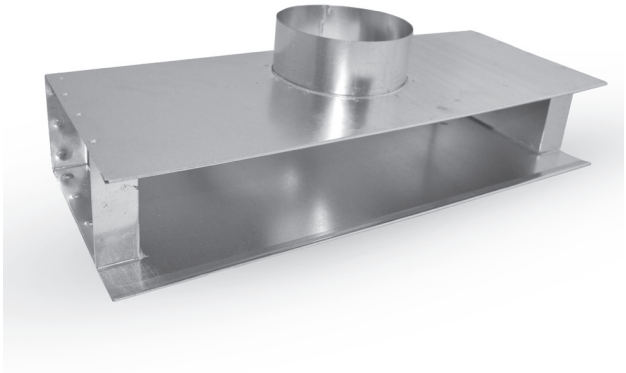

Description

The PR-LDS plenum boxes connect the ductwork ends to the LDS linear slot diffusers in low- or medium-pressure ventilation systems.
A plenum box stabilizes the air supply, providing uniform air flow rate before the air enters the diffuser. The ductwork is connected to the plenum box inlet port at the side.
The PR-LDS inlet port can be provided with a damper.
ALNOR fabricates plenum boxes lined with flexible and heatresistant 9 mm thick rubber insulation mats.

Symbols:
Equipment:
D - with air damper
Insulation:
I - insulated

Material: galvanized steel
Stainless steel version available on request.

Finish:
The standard version is supplied unpainted.
RAL 9016 powder-coated finish is available on request.

Product code example
Product code: **PR-LDS - 1-495 - D - I - Ød - 1**

type
size
equipment
insulation
diameter
no. of ports

Dimensions

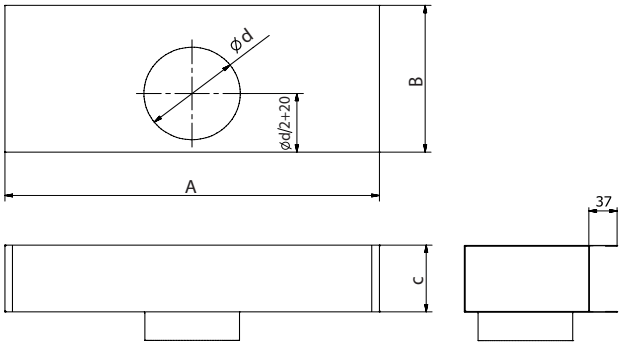

LDS diffussers [mm]	*A [mm]*	*B [mm]*	*C [mm]]*	*Stand. Ød [mm]*
LDS-1-495	490	200	45	125
LDS-2-495	490	200	90	160
LDS-2-990	985	200	90	160
LDS-3-990	985	250	140	200
LDS-4-990	985	250	185	200

ALNOR® ventilation systems
is a registered trademark protected by a technical patent. All modification rights reserved.

Round vane supply diffusers

ACL



Description

The ACL round supply diffusers are compatible with low- and medium-pressure ventilation as well as A/C air supply and exhaust ducts. They can be used in steady and variable air flow systems. The temperature of the air supplied can be lower by up to 12˚C than the indoor temperature. This enables using ACL diffusers in cold storage rooms. The recommended installation orientation is in the ceiling plane.

Material: galvanized steel sheet
Finish: powder-coated
Standard colours: RAL 9010
All RAL palette colours are available on request.

Available materials — Product code examples
ACL-...- galvanized steel sheet, powder-coated finish
colour: RAL 9010

Product code example
Product code: **ACL - aaa**

type
size

Dimensions

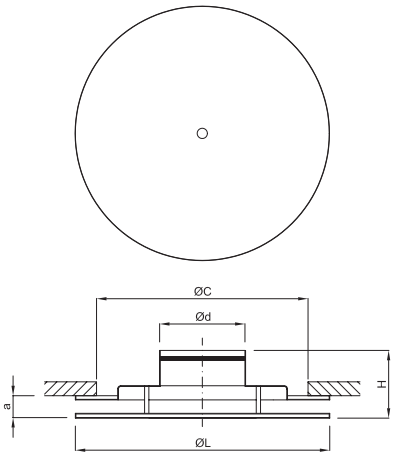

Size	ØD [mm]	ØL [mm]	ØC [mm]	H [mm]
125	123	240	200	148
160	158	300	260	158
200	198	360	320	168
250	248	460	420	168
315	313	540	500	168
400	398	540	500	168

ALNOR® ventilation systems
is a registered trademark protected by a technical patent. All modification rights reserved.

Round vane supply diffusers

ACL

Technical specifications

Selection charts

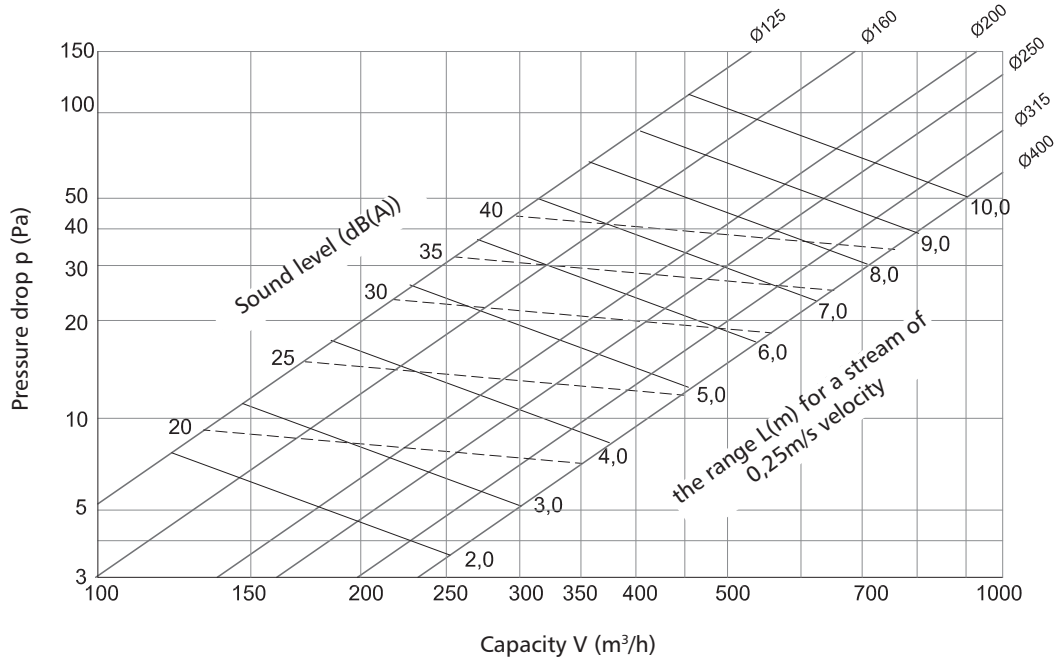

ALNOR® ventilation systems
is a registered trademark protected by a technical patent. All modification rights reserved.

Round vane supply diffusers
ACP



Description

The ACP round supply diffusers with perforated supply screens are compatible with low- and medium-pressure ventilation as well as A/C air supply and exhaust ducts. They can be used in steady and variable air flow systems. The temperature of the air supplied can be lower by up to 12˚C than the indoor temperature. This enables using ACP diffusers in cold storage rooms. The recommended installation orientation is in the ceiling plane.

Material: galvanized steel sheet
Finish: powder-coated
Standard colours: RAL 9010
All RAL palette colours are available on request.

Available materials — Product code examples
ACP-...- galvanized steel sheet, powder-coated finish
colour: RAL 9010

Product code example
Product code: **ACP - aaa**

type
size

Dimensions

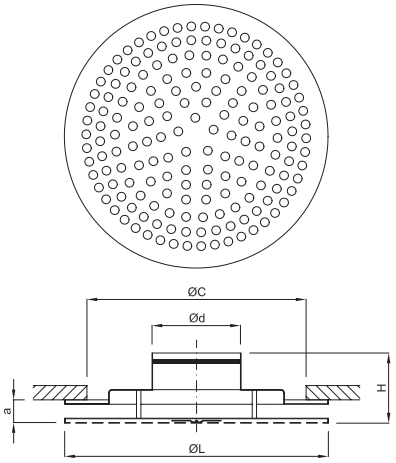

Size	ØD (mm)	ØL (mm)	ØC (mm)	H (mm)
125	123	240	200	148
160	158	300	260	158
200	198	360	320	168
250	248	460	420	168
315	313	540	500	168
400	398	540	500	168

ALNOR® ventilation systems
is a registered trademark protected by a technical patent. All modification rights reserved.

Round vane supply diffusers
ACP

Technical specifications

Selection charts

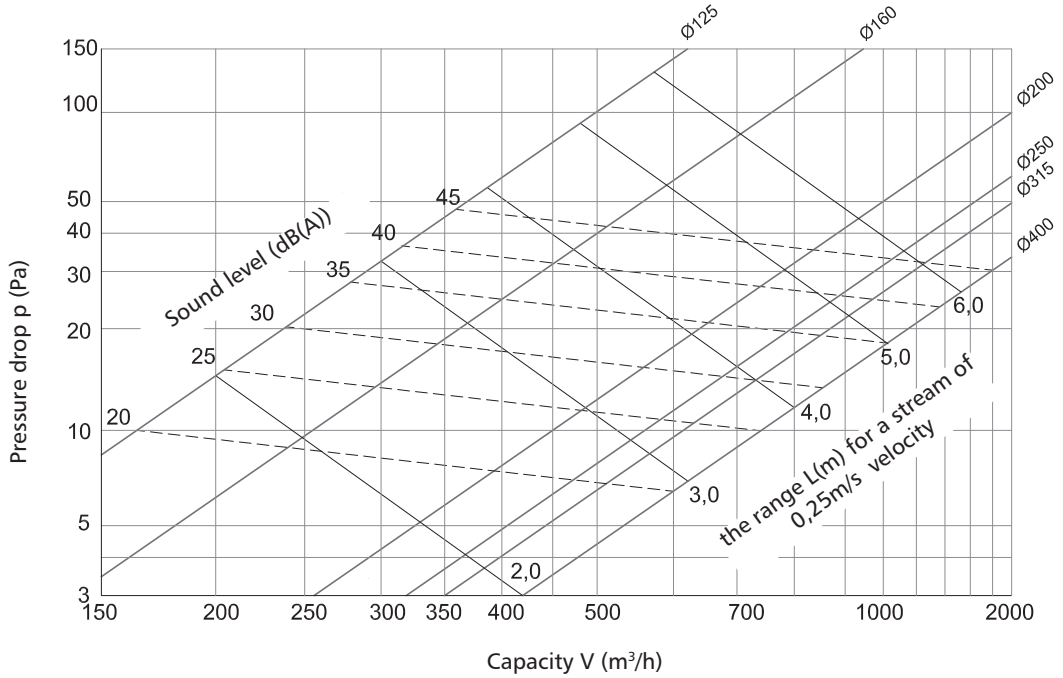

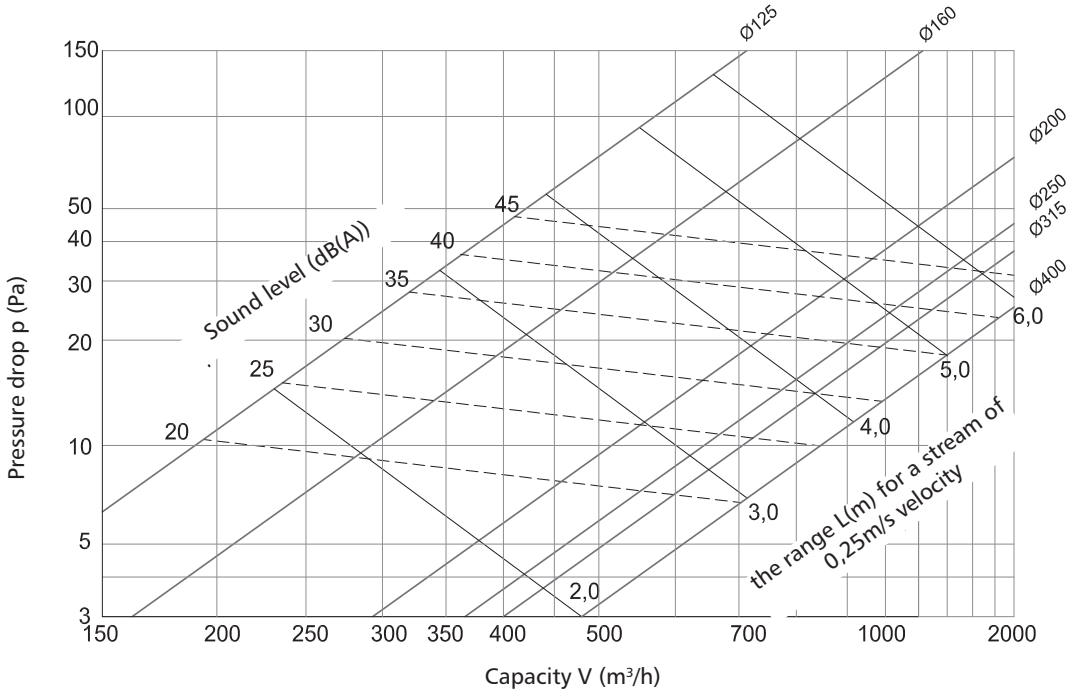

ALNOR® ventilation systems
is a registered trademark protected by a technical patent. All modification rights reserved.

Square supply diffusers
AKL



Description

The AKL square diffuser is a twin of the AKP model with a solid face (instead of a mesh screen face) and side diffuser slots. The product is designed for use in low- and medium-pressure air supply and exhaust systems.
It can be used in steady and variable air flow systems. The temperature of the air supplied can be lower by up to 12˚C than the indoor temperature. This enables using AKP diffusers in cold storage rooms. The recommended installation orientation is in the ceiling plane.

Material: galvanized steel sheet
Finish: powder-coated
Standard colours: RAL 9010
All RAL palette colours are available on request.

Available materials - Product code examples
AKL-...- galvanized steel sheet, powder-coated finish
colour: RAL 9010

Product code example
Product code: **AKL - aaa**

type
size

Dimensions

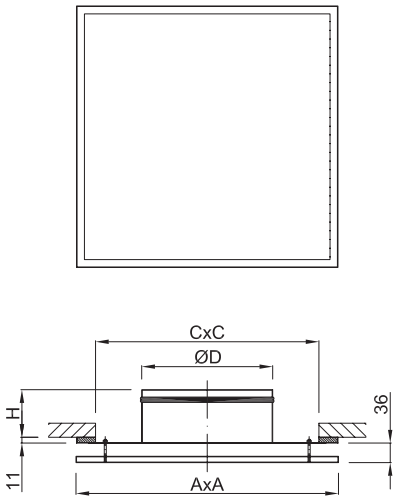

Size	ØD (mm)	A x A (mm)	C x C (mm)	H (mm)
125	123	235x235	200x200	138
160	158	295x295	260x260	148
200	198	395x395	360x360	158
250	248	495x495	460x460	158
315	313	595x595	560x560	158
400	398	595x595	560x560	158

ALNOR® ventilation systems
is a registered trademark protected by a technical patent. All modification rights reserved.

Round vane supply diffusers
AKL

Technical specifications

Selection charts

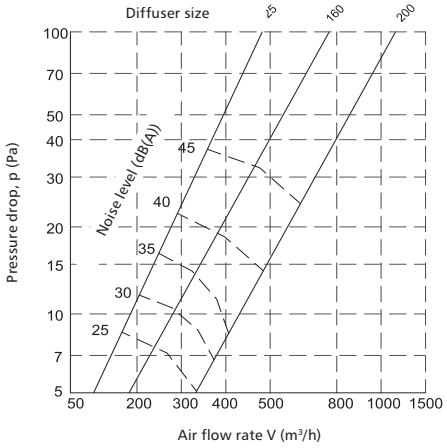

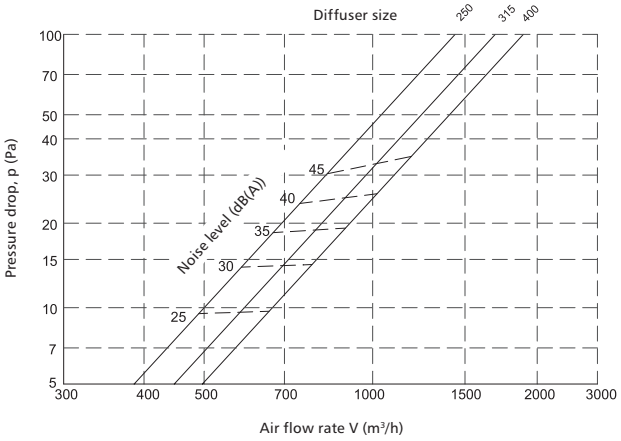

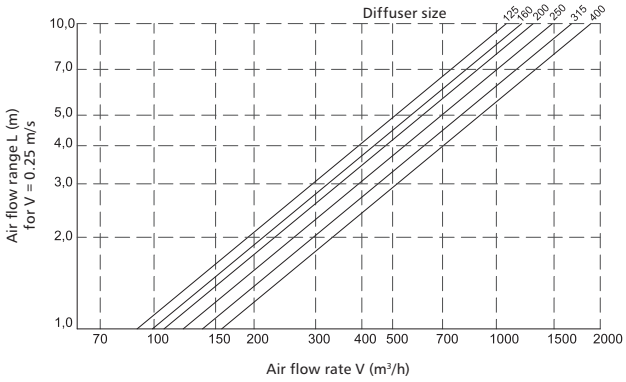

ALNOR® ventilation systems
is a registered trademark protected by a technical patent. All modification rights reserved.

Square supply diffusers
AKP



Description

The AKP square supply diffusers are compatible with low- and medium-pressure ventilation as well as A/C air supply and exhaust ducts. They can be used in steady and variable air flow systems. The temperature of the air supplied can be lower by up to 12 °C than the indoor temperature. This enables using AKP diffusers in cold storage rooms. The recommended installation orientation is in the ceiling plane.

Material: galvanized steel sheet
Finish: powder-coated
Standard colours: RAL 9010
All RAL palette colours are available on request.

Available materials — Product code examples
AKP-...- galvanized steel sheet, powder-coated finish
colour: RAL 9010

Product code example
Product code: **AKP - aaa**

type
size

Dimensions

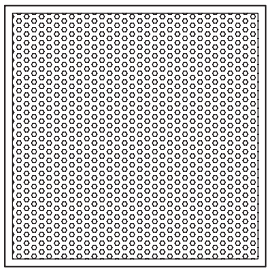

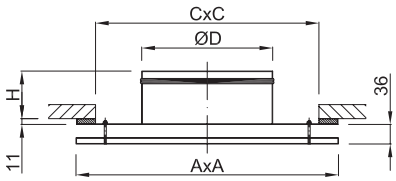

Size	ØD [mm]	A x A [mm]	C x C [mm]	H [mm]
125	123	235x235	200x200	138
160	158	295x295	260x260	148
200	198	395x395	360x360	158
250	248	495x495	460x460	158
315	313	595x595	560x560	158
400	398	595x595	560x560	158

ALNOR® ventilation systems
is a registered trademark protected by a technical patent. All modification rights reserved.

Round vane supply diffusers
AKP

Technical specifications

Selection charts

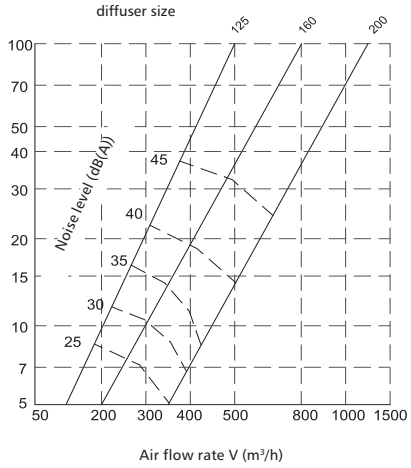

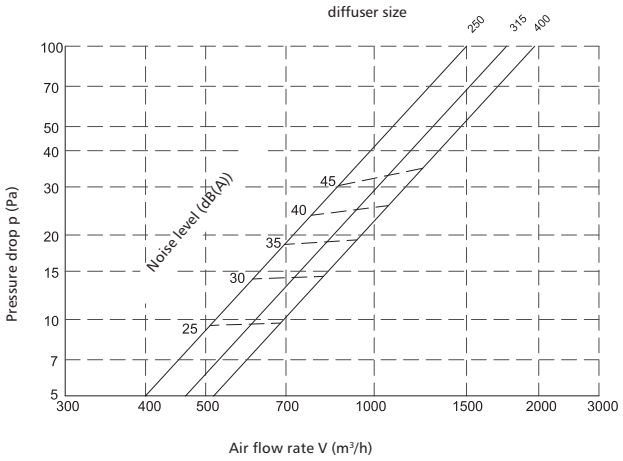

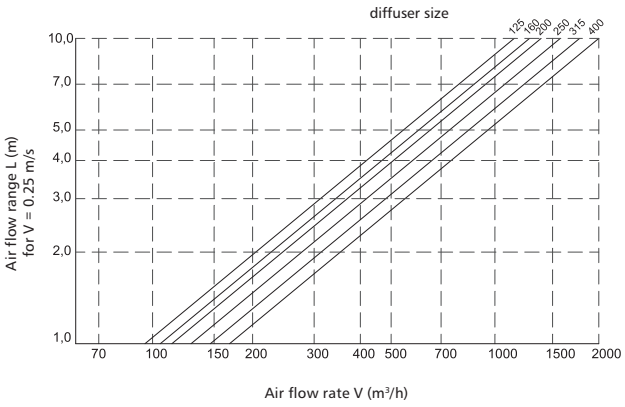

ALNOR® ventilation systems
is a registered trademark protected by a technical patent. All modification rights reserved.

Round vane supply diffusers

DKF / DKF-L



Description

The DKF round vane supply diffusers are compatible with low- and medium-pressure ventilation as well as A/C air supply and exhaust ducts. They can be used in steady and variable air flow systems. The DKF can be used in air heating and cooling systems. The DKF provides a very high air supply rate. The recommended installation orientation is in the ceiling plane. Version DKF-L with gasket.

Material: galvanized steel sheet
Finish: powder-coated
Standard colours: RAL 9010
All RAL palette colours are available on request.

Available materials — Product code examples
DKF-...- steel sheet, powder-coated finish colour: RAL 9010

Product code example
Product code: **DKF - aaa**

type
size

Dimensions

DKF

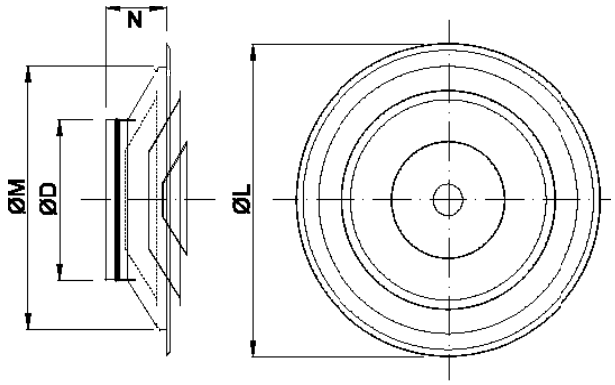

Code	ØD [mm]	ØL [mm]	ØM [mm]	N [mm]	Weight [kg]
DKF-125	124	305	270	80	1,0
DKF-160	159	305	270	82	1,0
DKF-200	199	378	330	84	1,5
DKF-250	249	477	420	99	2,2
DKF-315	314	591	530	116	3,4
DKF-400	398	690	630	128	5,1

DKF-L

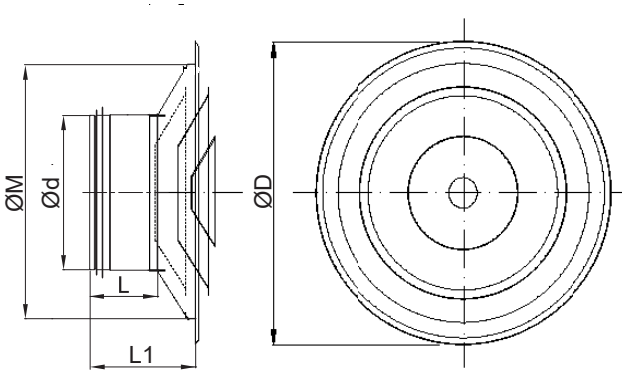

Code	ØD [mm]	Ød [mm]	ØM [mm]	L_1 [mm]	L [mm]	Weight [kg]
DKF-L-125	305	125	270	145	85	1,1
DKF-L-160	305	160	270	145	85	1,1
DKF-L-200	378	200	330	150	85	1,6
DKF-L-250	477	250	420	164	85	2,4
DKF-L-315	591	315	530	186	90	3,7
DKF-L-400	690	400	540	233	125	5,6

ALNOR® ventilation systems
is a registered trademark protected by a technical patent. All modification rights reserved.

DKF / DKF-L

Technical specifications

Selection charts

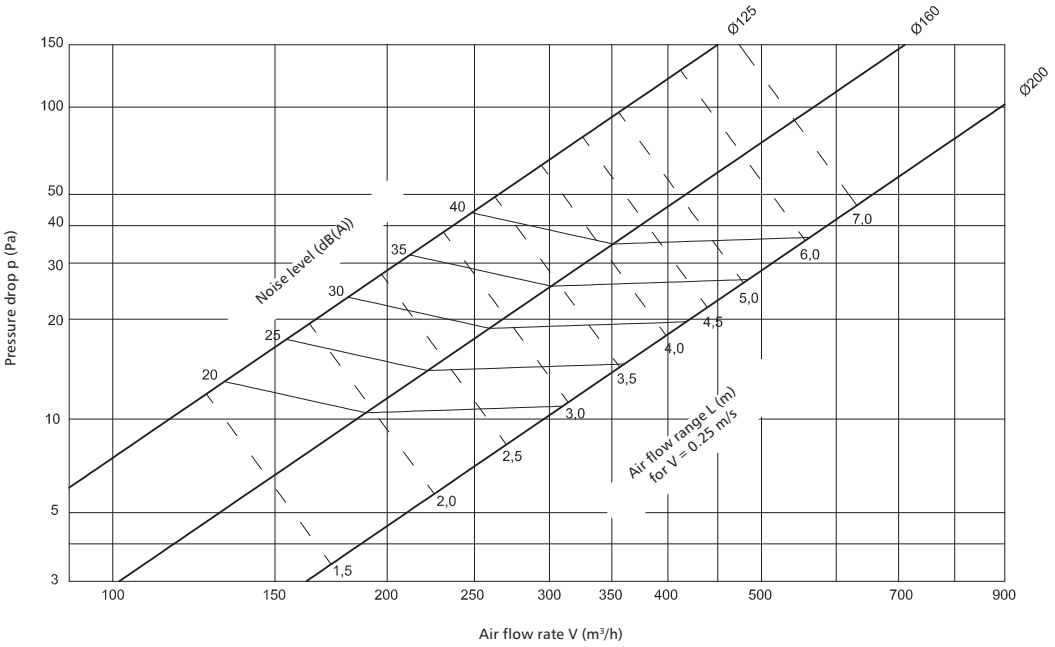

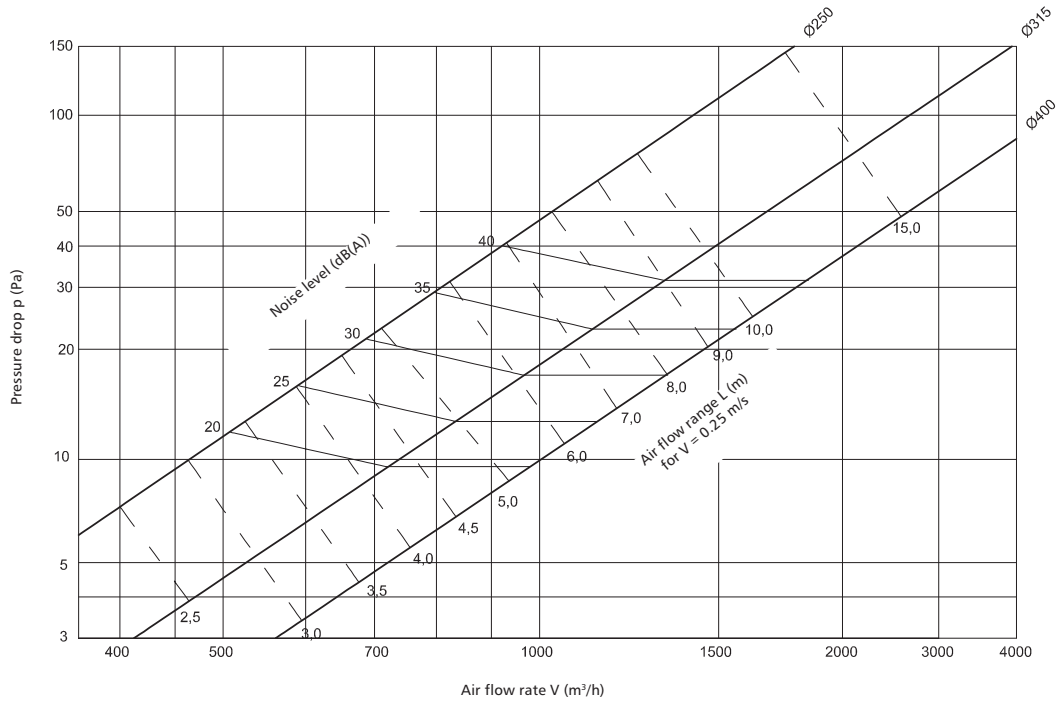

ALNOR® ventilation systems
is a registered trademark protected by a technical patent. All modification rights reserved.

Wall-mounted steel air intake and exhaust vents

CSQ / WSQ



Dimensions

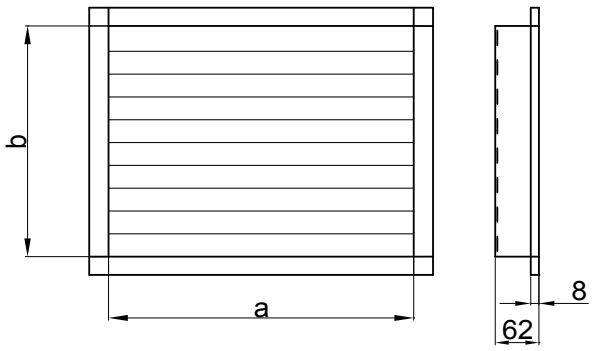

Description

The air intake / exhaust vents are square frames fitted with fixed-angle louvres and a wire mesh made of a 1 mm thick wire and mesh opening size of 12.7x12.7 mm. The vents can be installed in walls or at the ends of ventilation ducts.
The product is made from galvanized steel sheet.
The powder-coated finish in any RAL colour is available on request.
The product is provided with the PZH-NIH Hygiene Certificate no. HK/B/1652/01/2007.

Note:
Available without the wire mesh - product code: WSQ.

Available materials — Product code examples
CSQ-...-...- galvanized steel sheet

Product code example
Product code: **CSQ - 2500 - 500**

type
a
b

Technical specifications

Selection chart

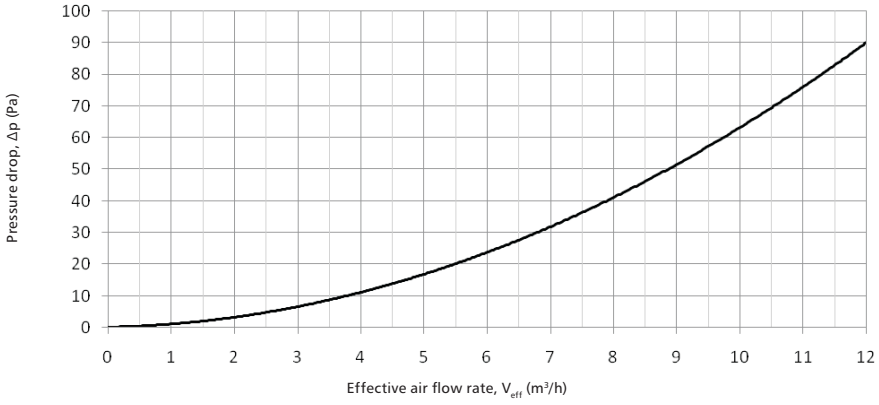

Height b [mm]	*Effective area [%]*
200	51
300	55
400	57
500	59
600	61
700	62
> 800	63

ALNOR® ventilation systems
is a registered trademark protected by a technical patent. All modification rights reserved.

Wall-mounted aluminium air intake and exhaust vents

CSQ-A / WSQ-A



Description

The air intake / exhaust vents are square frames fitted with fixed-angle louvres and a wire mesh made of a 1 mm thick wire and mesh opening size of 12.7x12.7 mm. The vents can be installed in walls or at the ends of ventilation ducts.
The product is made from aluminium sheet.
The powder-coated finish in any RAL colour is available on request.
The product is provided with the PZH-NIH Hygiene Certificate no. HK/B/1652/01/2007.

Note:
Available without the wire mesh - product code: WSQ-A.

Available materials — Product code examples
CSQ-A...-...- aluminium sheet

Product code example
Product code: **CSQ-A - 2500 - 500**

type
a
b

Dimensions

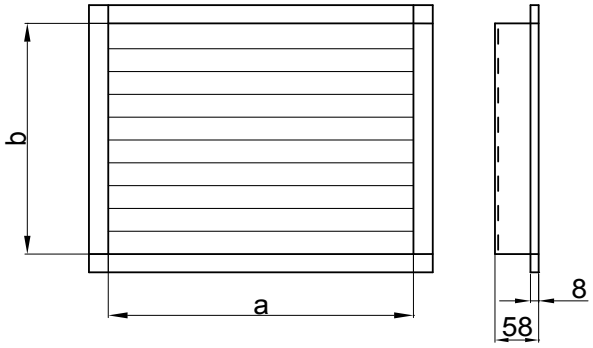

ALNOR® ventilation systems
is a registered trademark protected by a technical patent. All modification rights reserved.

Wall-mounted air intake and exhaust vents made from stainless steel

CSQ-K / WSQ-K

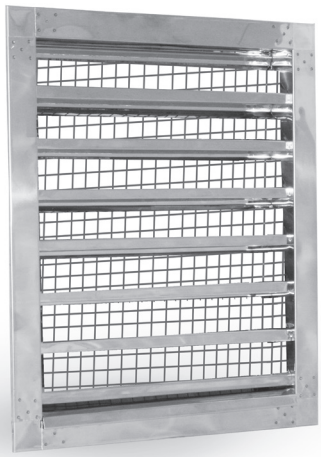

Dimensions

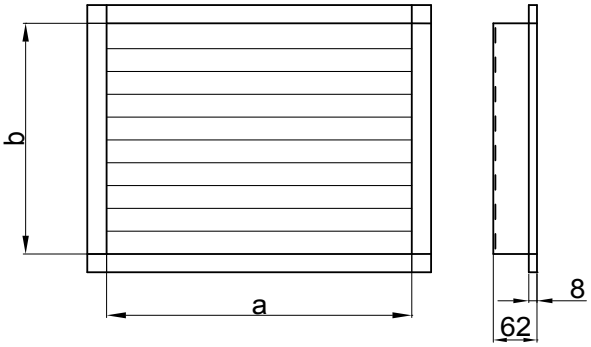

Description

The air intake / exhaust vents are square frames fitted with fixed-angle louvres and a stainless steel wire mesh made of a 1 mm thick wire and mesh opening size of 12.7x12.7 mm. The vents can be installed in walls or at the ends of ventilation ducts.
The product is made from stainless steel sheet.
The powder-coated finish in any RAL colour is available on request.
The product is provided with the PZH-NIH Hygiene Certificate no. HK/B/1652/01/2007.

Material: 1.4301 stainless steel sheet

Note:
Max length - 1600 mm
Available without the wire mesh - product code: WSQ-K.

Available materials - Product code examples
CSQ-K-...-...- 1.4301 stainless steel sheet

Product code example
Product code: **CSQ-K - 1600 - 500**

type
a
b

ALNOR® ventilation systems
is a registered trademark protected by a technical patent. All modification rights reserved.

Wall-mounted non-return air exhaust vent

WSOQ



Description

The air exhaust vent is a multi-blade, self-closing and non-return valve with aluminium blades. The special blade design allows automatic air flow admission under pressure. When the air flow pressure is zero, the air exhaust vent is closed shut. When the connected air handling unit is offline, the air exhaust vent prevents air backflow.
The housing is made of galvanized steel angles. The blades are made of aluminium sections. All blades are provided with sealing gaskets. The blade height is the same for all product sizes. The blade bearings are fitted inside the upright sections.

The versions with vertical partitions are available when:
A ≥ 1400 mm according to the following requirements:
for 1400 mm < A ≤ 2100 mm, a single partition is installed;
A > 2100 mm features more than one partition.

Operating temperature range: -20˚C to +80˚C

Available materials - Product code examples
WSOQ...-...- blacha stalowa ocynkowana, pióra z aluminium

Product code example
Product code: **WSOQ - 600 - 300**

type
a
b

Dimensions

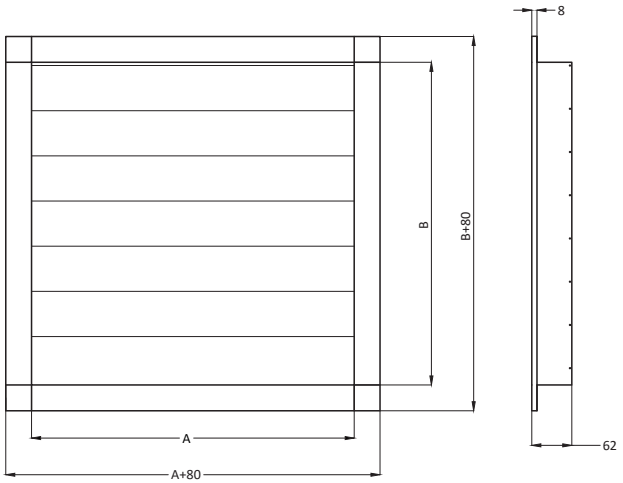

A *[mm]*	*B* *[mm]*
300-2000	300-2000

ALNOR® ventilation systems
is a registered trademark protected by a technical patent. All modification rights reserved.

Steel non-return air damper

DSQOW

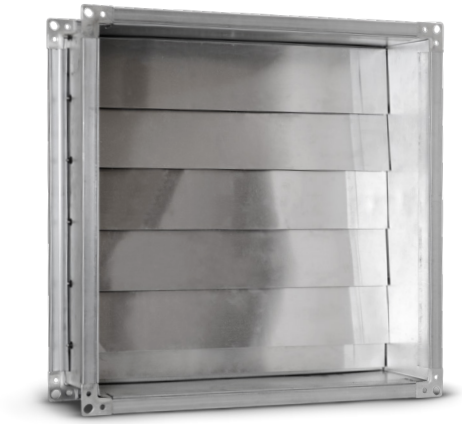

Description

The multi-blade self-closing non-return damper with aluminium blades is designed for air pressure control in the ventilation system. The special blade design allows automatic air flow exhaust under pressure. This prevents overpressurizing the ductwork. The housing is made from galvanized steel angles. The blades are made of aluminium sections.
The air damper comprises a housing made of 4 angles identical to those used in the fabrication of the DSQW air dampers. All blades are provided with sealing gaskets.

The DSQOW air damper features moving aluminium blades, each 80 mm high. The blade height is the same for all product sizes. The blade bearings are fitted inside the upright sections. The versions with vertical partitions are available when:
A ≥ 1400 mm according to the following requirements:
for 1400 mm < A ≤ 2100 mm, a single partition is installed;
A > 2100 mm features more than one partition.
.

Material: galvanized steel sheet with aluminium blades

Operating temperature range: -20˚C to +80˚C

Available materials — Product code examples
DSQOW-...-...- galvanized steel sheet housing with aluminium sheet blades

Product code example
Product code: **DSQOW - 600 - 300**

type
a
b

Dimensions

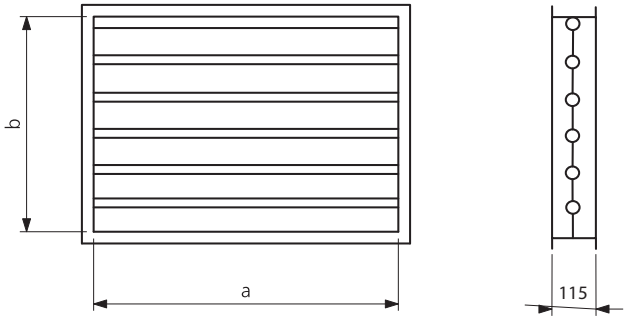

A *[mm]*	*B* *[mm]*
300-2000	300-2000

ALNOR® ventilation systems
is a registered trademark protected by a technical patent. All modification rights reserved.

PQ framed wire mesh

QILN

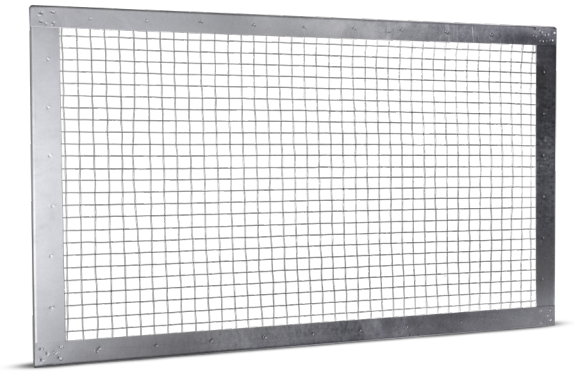

Dimensions

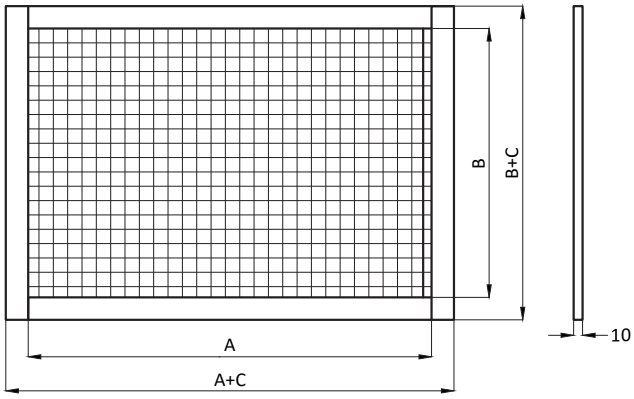

C — frame width

Description

The wire mesh is available with the mesh opening size of 10 x 10 mm and 1.05 mm thick wires (or 2 mm thick wires for the side length of 1000 x 1000 mm or greater). The wire mesh is fitted in a frame of 1.0 mm thick sheets. The framed wire mesh provides an end trim for square ducts. The frame width is 25 mm (or 35 mm for all side length sizes above 1000 mm). The frame sheet strip is wide enough to completely conceal the PQ angle frame, which is a standard finish trim for square ducts. The wire mesh can be fitted with a variety of fasteners, including rivets.

The standard maximum size of the QLIN is 1250 x 1250 mm. Larger sizes are available on request.
The powder-coated finish in any RAL colour is available on request.

Available materials - Product code examples
QILN-... -... - galvanized steel sheet
QILN-K-... -... - 1.4301 stainless steel sheet
QILN-K-...-316L - 1.4404/316L stainless steel sheet

Product code example
Product code: **QILN - 2500 - 500**

type
a
b

A / B side length (mm)	*< 500*	*≥ 500*	*> 1000*
< 500	Ø1.05 mm c = 25 mm	Ø1.05 mm c = 25 mm	Ø1.05 mm c = 35 mm
≥ 500	Ø1.05 mm c = 25 mm	Ø1.05 mm c = 25 mm + bracing	Ø1.05 mm c = 35 mm + bracing
> 1000	Ø1.05 mm c = 35 mm	Ø1.05 mm c = 35 mm + bracing	Ø2 mm c = 35 mm + bracing

ALNOR® ventilation systems
is a registered trademark protected by a technical patent. All modification rights reserved.

Silencers

ALNOR reserves the right to modify technical specifications in line with the policy of continuous product improvement.

ALNOR® systemy wentylacji
is a registered trademark protected by a technical patent. All modification rights reserved.

System description

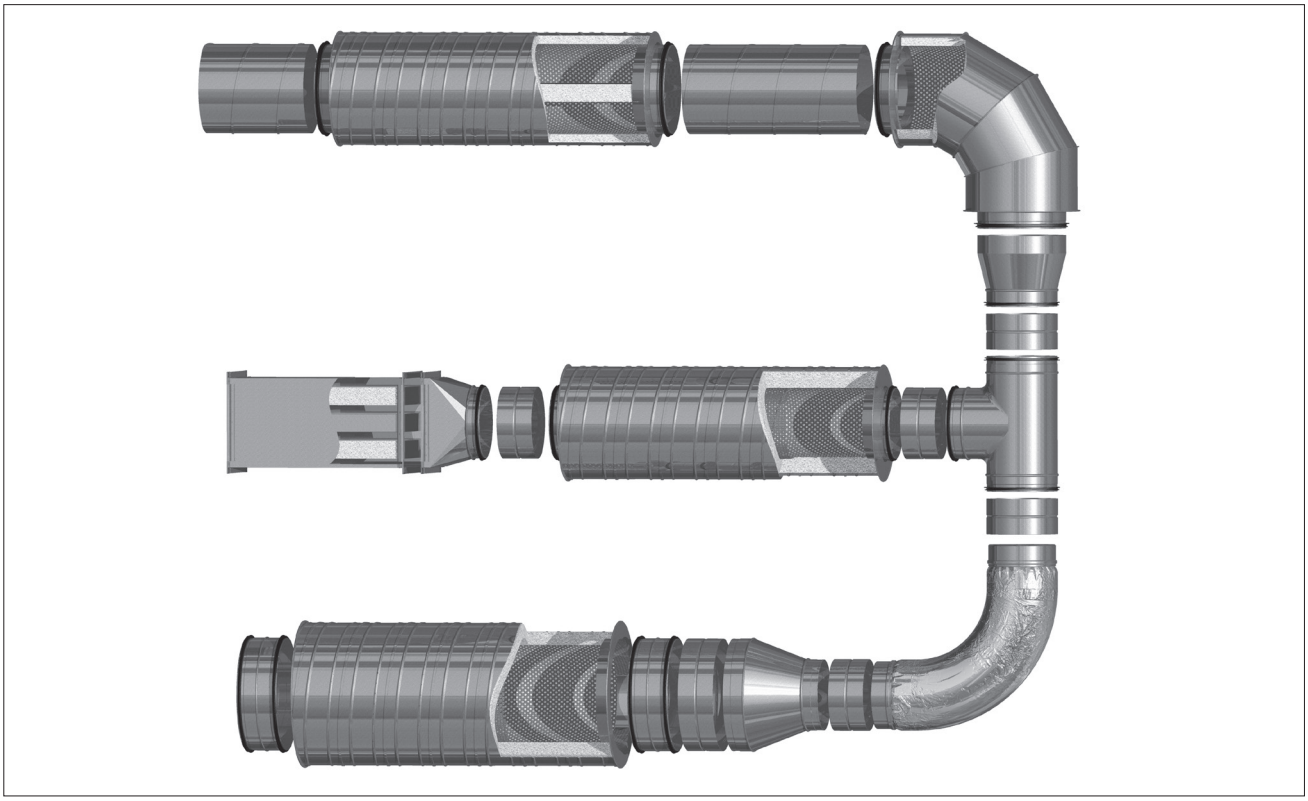

System description

Together with matching fittings and ducts, silencers provide a complete system for building ventilation ductwork. The wide range of various types and versions allow adapting silencers to virtually any design requirements.

Dimensions

Diameter sizes of all round silencers are compatible with SPIRAL® system round fittings. Square silencer need to be size-adjusted to the dimensions of the existing ductwork and fittings installed. Other sizes are shown in the tables and specifications in the individual Product Data Sheets.

Installation instructions

Round silencers are fastened with self-drilling screws or blind rivets, either of which are driven through the ductwork length overlapping the connection flange inside. All parts with a diameter over 315 mm have female joints and require two additional male couplings for connecting with the ductwork. Square silencers are fastened with screws at steel corner straps and with a KQL G-clamp which fastens two flange frames.

Application advantages

Silencers are intended to reduce noise levels generated in the ductwork by fans and AHUs and transmitted through the ductwork from the ventilated rooms. The flexible design and compatibility with other ventilation system components allow installation in exposed areas.



The dedicated software suite, AlnorSILENT, helps designers in selecting the right silencer for specific fans and expected noise levels.

Marking

ALNOR products carry the Polish conformity mark B for construction products and product codes as shown in the technical specifications listed in this catalogue.

SPIRAL® system round silencers are made from galvanized steel sheet and are provided with PZH-NIH Hygiene Certificate no. HK/B/0867/01/2009.

Square silencers have the following PZH-NIH Hygiene Certificates:
a) The galvanized steel sheet version: HK/B/0100/02/2009
a) The stainless steel sheet version: HK/B/0101/01/2009

ALNOR® ventilation systems
is a registered trademark protected by a technical patent. All modification rights reserved.

Technical specifications - Silencers

PRODUCT CODE	Insulation thickness	Dimensions min. - max.	Insulation material	Insulation type	Finish	Joint	Outer cladding	Inner cladding	Length	Baffle	Materials
SIL	50 100	080-900	glass wool	trimmed from reel, flexible	press-formed cover segmented cover	male port w/gasket female port from 355 mm	SPIRAL tube	perforated sheet	300/500/600/900/1000/1200/1500/ max. 3000	–	galvanized steel 1.4301 or 1.4404 stainless steel aluminium copper
SIBL	100	315-800	glass wool	trimmed from reel, flexible	segmented cover	male port w/gasket female port from 355 mm	SPIRAL tube	perforated sheet	600/900/ 1000/1500	straight, 100 mm	galvanized steel 1.4301 or 1.4404 stainless steel aluminium copper
SIBOL	50 100	200-1000	glass wool	trimmed from reel, flexible	press-formed cover segmented cover	male port w/gasket female port from 355 mm	SPIRAL tube	perforated sheet	300/600/900/1000/1200/1500	round from d-100 to d-500	galvanized steel 1.4301 or 1.4404 stainless steel aluminium copper
SIRL	100 150	080-800	rock wool	trimmed from reel, flexible	segmented cover	male port w/gasket female port from 355 mm	SPIRAL tube	perforated sheet	300/600/900/1000/1200/1500	–	galvanized steel 1.4301 or 1.4404 stainless steel aluminium copper
SIBRL	100	315-800	rock wool	trimmed from reel, flexible	segmented cover	male port w/gasket female port from 355 mm	SPIRAL tube	perforated sheet	1000/1200/ 1500	straight, 100 mm	galvanized steel 1.4301 or 1.4404 stainless steel aluminium copper
SIBROL	100-150	200-1000	rock wool	trimmed from reel, flexible	press-formed cover segmented cover	male port w/gasket female port from 355 mm	SPIRAL tube	perforated sheet	300/600/900/1000/1200	round from d-100 to d-500	galvanized steel 1.4301 or 1.4404 stainless steel aluminium copper
SIL-GL	25 50 100	080 - 315	glass wool	trimmed from reel, flexible	segmented - hemmed and seamed with cladding	male port w/gasket	plain tube	perforated sheet	300/500/600/900/1000	–	galvanized steel 1.4301 or 1.4404 stainless steel aluminium copper
SI-GL	25 50 100	080 - 315	glass wool	trimmed from reel, flexible	segmented - hemmed and seamed with cladding	male port w/o gasket	plain tube	perforated sheet	300/500/600/900/1000	–	galvanized steel 1.4301 or 1.4404 stainless steel aluminium copper
SQLL-25	25	100 - 630	glass wool	trimmed from reel, flexible	square cover w/port	male port w/gasket	square	perforated sheet	600/900/1200	–	galvanized steel 1.4301 or 1.4404 stainless steel aluminium copper
SQLL-50	50	100-630	glass wool	trimmed from reel, flexible	square cover w/port	male port w/gasket	square	perforated sheet	300/500/600/900/1000	–	galvanized steel 1.4301 or 1.4404 stainless steel aluminium copper

ALNOR® ventilation systems
is a registered trademark protected by a technical patent. All modification rights reserved.

Technical specifications - Silencers

SQLL-CR	10-100	080-250	glass wool with lining	rigid panel with lining	square cover w/port	male port w/gasket	square	insulation panel ridge	500/700/900/1200	–	galvanized steel 1.4301 or 1.4404 stainless steel aluminium copper
SQLL-CRQ	10-100	080-250	glass wool with lining	rigid panel with lining	square cover w/port + angle frame on the other side	male port w/gasket + square w/PQ-20 angle on the other side	square	insulation panel ridge + perforat-ed end	500/700/900/ 1200	–	galvanized steel 1.4301 or 1.4404 stainless steel aluminium copper
SQQL-30	30	100-630	glass wool	rigid panel with lining	square cover w/port	male port w/gasket	square	insulation panel square	600/900/1200	–	galvanized steel 1.4301 or 1.4404 stainless steel aluminium copper
SQQL-B-30	30	100-630	glass wool	rigid panel with lining	square cover w/port + side branch port	male port w/gasket	square	insulation panel square	600/900/1200	–	galvanized steel 1.4301 or 1.4404 stainless steel aluminium copper
BSIL	50 100	125-630	glass wool	trimmed from reel, flexible	segmented cover	male port w/gasket	segmented bend	perforated sheet	90 degree other angles are available on request	–	galvanized steel 1.4301 or 1.4404 stainless steel aluminium copper
SLEFL	25 50	080-315	glass wool	trimmed from reel, flexible	flat metal cover	male port w/safe edge male port w/gasket female port w/safe edge	aluminium-polyester foil	FLEX perforated	500/600/1000/ 1200	–	aluminium
SLEAL	25 50	080-315	glass wool	trimmed from reel, flexible	none	female port	Aluduct - alu-poly film over wire ribs	Aluduct perforated	500/600/1000/ 1200	–	aluminium
SLESD	25 50	080-315	glass wool	trimmed from reel, flexible	flat metal cover	male port w/safe edge male port w/gasket female port w/safe edge	aluminium-polyester foil	Aluduct perforated	500/600/1000/ 1200	–	aluminium
SLEAF	25 50	080-315	glass wool	trimmed from reel, flexible	galvanized segmented cover	male port w/safe edge male port w/gasket female port w/safe edge	FLEX	FLEX perforated	500/600/1000/ 1200	–	aluminium
SLEFD	25 50	080-315	glass wool	trimmed from reel, flexible	galvanized segmented cover	male port w/safe edge male port w/gasket female port w/safe edge	Aluduct - alu-poly film over wire ribs	FLEX perforated	500/600/1000/ 1200	–	aluminium
SLEFL	25 50	080-315	glass wool	trimmed from reel, flexible	flat metal cover	male port w/safe edge male port w/gasket female port w/safe edge	polyethylene cladding	FLEX perforated	500/600/1000/ 1200	–	aluminium

ALNOR® ventilation systems
is a registered trademark protected by a technical patent. All modification rights reserved.

Material specifications

The silencers are made from galvanized steel sheets.

Other materials are available on request:
1.4301/304 stainless steel sheet
1.4404/316L stainless steel sheet, molybdenum-enriched
AW-1050A H24 aluminium sheet

Specify the metal grade designation when ordering. Note that if no metal grade is specified in your order, the product will be made from the standard galvanized steel sheet.

Examples of metal grade ordering designations:
SIL-K-… - 1.4301/304
SIL-K-…..-…..-316L - 1.4404/316L
SIL-A-…. - AW-1050A H24

Components made from stainless steel have to be inspected at least every 6 months.

Product code examples
Product code: **SIL - iii - aaa - bbb**

type
Insulation thickness
$Ød_1$
L

Silencer dimensions

The **SPIRAL®system** must follow these specifications to meet the required sealing performance.

$Ød_{1\ nom}$ (mm)	e (mm)	tolerance (mm)	
80-315	36	+0	-6
355-400	55	+0	-6
450-630	75	+0	-10
710-900	100	+0	-10
1000-1250	115	+0	-20

Silencer tolerance limits

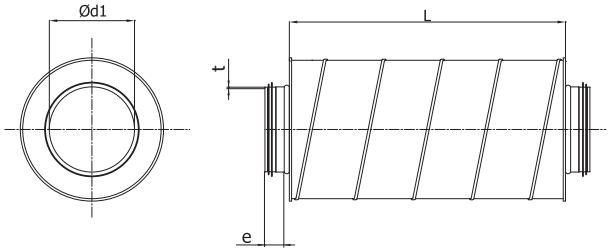

Diameter $Ød_{1\ nom}$ (mm)	Min. - max. diameter $Ød_{1\ min}$ - $Ød_{1\ max}$ (mm)	Sheet thickness t_{nom} (mm)
80	78.8 - 79.3	0.5
100	98.8 - 99.3	0.5
112	110.5 - 111.3	0.5
125	123.8 - 124.3	0.5
140	138.7 - 139.3	0.5
150	148.7 - 149.3	0.5
160	158.7 - 159.3	0.5
180	178.6 - 179.3	0.5
200	198.6 - 199.3	0.5
224	222.5 - 223.3	0.5
250	248.5 - 249.3	0.5
280	278.4 - 279.3	0.5
300	298.4 - 299.3	0.5
315	313.4 - 314.3	0.5
355	353.3 - 354.3	0.5
400	398.3 - 399.3	0.5
450	448.2 - 449.3	0.5
500	498.2 - 499.3	0.5
560	558.1 - 559.3	0.6
600	598.2 - 599.3	0.6
630	628.1 - 629.3	0.6
710	708.0 - 709.3	0.7
800	798.0 - 799.3	0.7
900	897.9 - 899.3	0.7
1000	997.9 - 999.3	0.9
1120	1117.8 - 1119.3	0.9
1250	1247.8 - 1249.3	0.9

ALNOR® ventilation systems
is a registered trademark protected by a technical patent. All modification rights reserved.

Tolerance limits for ventilation silencers made from stainless steel, copper, or aluminium

1.4301/304 sheet components

Diameter $Ød_{nom}$ *(mm)*	*Sheet thickness* t_{nom} *(mm)*
80	0.5
100	0.5
112	0.5
125	0.5
140	0.5
150	0.5
160	0.5
180	0.5
200	0.5
224	0.5
250	0.5
280	0.5
300	0.5
315	0.5
355	0.5
400	0.5
450	0.5
500	0.5
560	0.7
600	0.7
630	0.7
710	0.7
800	0.7
900	0.7
1000	0.7
1250	0.7

1.4404/316L sheet components

Diameter $Ød_{nom}$ *(mm)*	*Sheet thickness* t_{nom} *(mm)*
80	0.6
100	0.6
112	0.6
125	0.6
140	0.6
150	0.6
160	0.6
180	0.6
200	0.6
224	0.6
250	0.6
280	0.6
300	0.6
315	0.6
355	0.6
400	0.6
450	0.6
500	0.6
560	0.6
600	0.6
630	0.6
710	0.6
800	0.6
900	0.6
1000	0.8
1250	0.8

The 1.4301 and 1.4404 stainless steel silencers are designed for use with round and square ducts and fittings. The covers are segmented and the component wall thickness sizes depend on the silencer diameter and material. The 1.4404 steel sheet cladding features a perforated inner cladding of 1.4301 steel sheet; the molybdenum-enriched version manufacturability is determined and quoted on special request only. The SIBOL silencer baffle breasts are conical and segmented. Before ordering your silencer, verify that the glass or rock wool and the lining or glass cloth will provide sufficient resistance to the airborne contaminants inside the ductwork. The perforation style, the wool type and the lining type can provide the sound insulation performance identical to that of the standard galvanized steel sheet silencers.

AW-1050A H24 sheet components

Diameter $Ød_{nom}$ *(mm)*	*Sheet thickness* t_{nom} *(mm)*
80	0.8
100	0.8
112	0.8
125	0.8
140	0.8
150	0.8
160	0.8
180	0.8
200	0.8
224	0.8
250	0.8
280	0.8
300	0.8
315	0.8
355	0.8
400	0.8
450	0.8
500	0.8
560	0.8
600	0.8
630	0.8
710	0.8
800	0.8
900	0.8

M1-E sheet components

Diameter $Ød_{nom}$ *(mm)*	*Sheet thickness* t_{nom} *(mm)*
80	0.6
100	0.6
112	0.6
125	0.6
140	0.6
150	0.6
160	0.6
180	0.6
200	0.6
224	0.6
250	0.6
280	0.6
300	0.6
315	0.6
355	0.6
400	0.6
450	0.6
500	0.6

The copper or aluminium sheet ducted silencers perfectly match spiral coiled tubes and round segmented fittings. The outer cladding and the inner perforated cladding are made of copper or aluminium sheet, respectively. The SIBOL and SIBROL silencer baffle breasts are segmented. The rock or glass wool with a lining can provide the sound insulation performance identical to that of the standard galvanized steel sheet silencers.

ALNOR® ventilation systems
is a registered trademark protected by a technical patent. All modification rights reserved.

Measurement method

A selection of the SPIRAL® system silencers have been tested by the Institute of Power Engineering, Research Institute, Thermal Technology Branch 'ITC' in Łódź.
The silencer sample performance was measured in a reverberation chamber as per EN ISO 7235:2009, "Acoustics. Laboratory measurement procedures for ducted silencers and air-terminal units. Insertion loss, flow noise and total pressure loss", and EN ISO 3741:2010, "Acoustics. Determination of sound power levels and sound energy levels of noise sources using sound pressure. Precision methods for reverberation test rooms."
The measurement scheme is shown below:

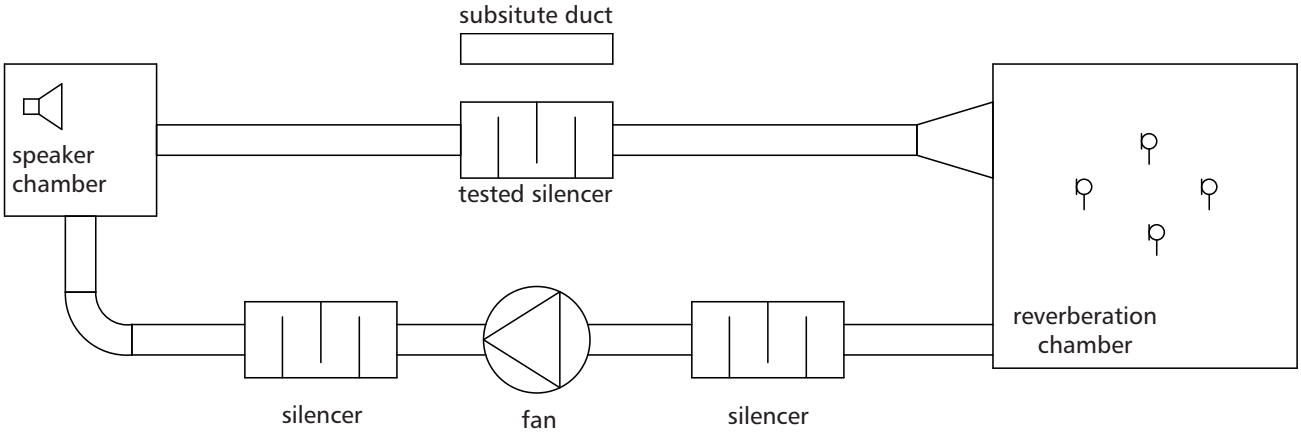

The chart below shows the sound insulation parameters for a selection of the SIL-50 silencers of various diameter sizes and identical body length.

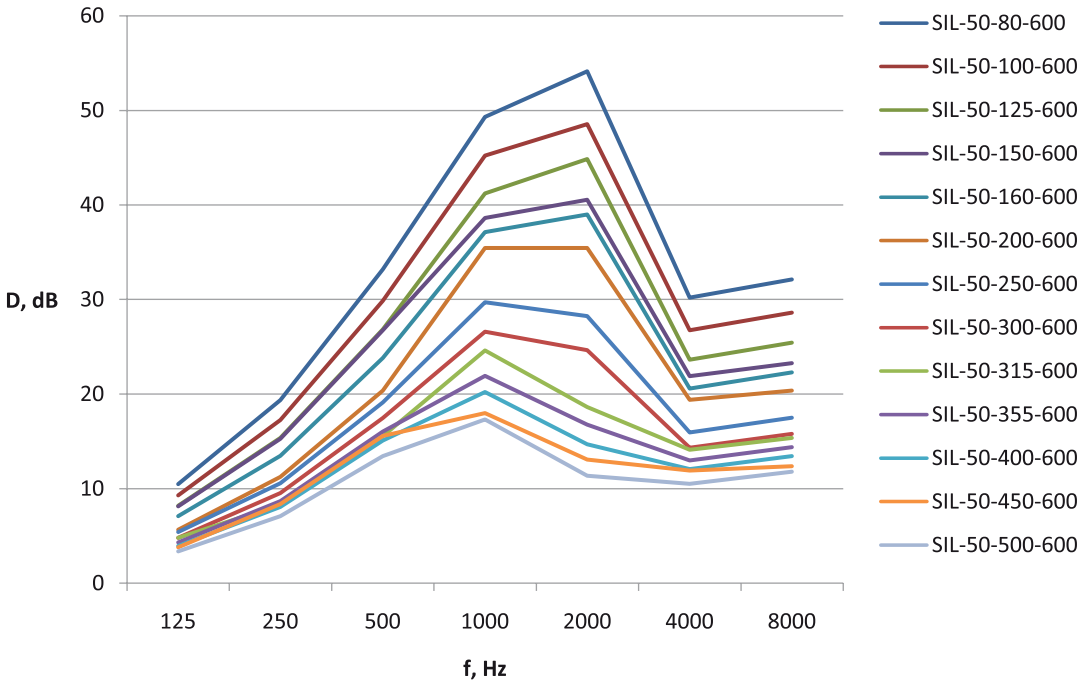

ALNOR® ventilation systems
is a registered trademark protected by a technical patent. All modification rights reserved.

System description

Design software

The **AlnorSILENT** software suite is a silencer selection tool for HVAC designers. AlnorSILENT calculates the silencer performance characteristics based on the user's input data. AlnorSILENT enables HVAC designers to analyse the key product features.
The software product database contains the sound insulation performance data for round and square silencers.
AlnorSILENT features a very user-friendly, intuitive, and highly functional GUI with multiple panels. The panels make it possible to review Product Data Sheets, 3D models and performance data tables at a glance. AlnorSILENT can provide several alternative silencers to choose from for the expected sound insulation performance.
The 3D models of silencers can be exported to IFC and DXF files. Once a silencer is chosen, AlnorSILENT will export detailed lists of technical specifications for an easy cost estimation of the ventilation system.

Application advantages of AlnorSILENT

- Choose the silencer to match the specified ventilation fan and the expected sound insulation performance
- Several alternative silencers to choose from for the expected sound insulation performance
- Full lists of technical specifications and data
- A comprehensive database of sound performance data for round and square silencers
- Automatic silencer cost estimation in the Distributor's Edition
- Silencer 3D models to exportable to IFC and DXF files
- AlnorSILENT is a freeware programme.

Download and install AlnorSILENT

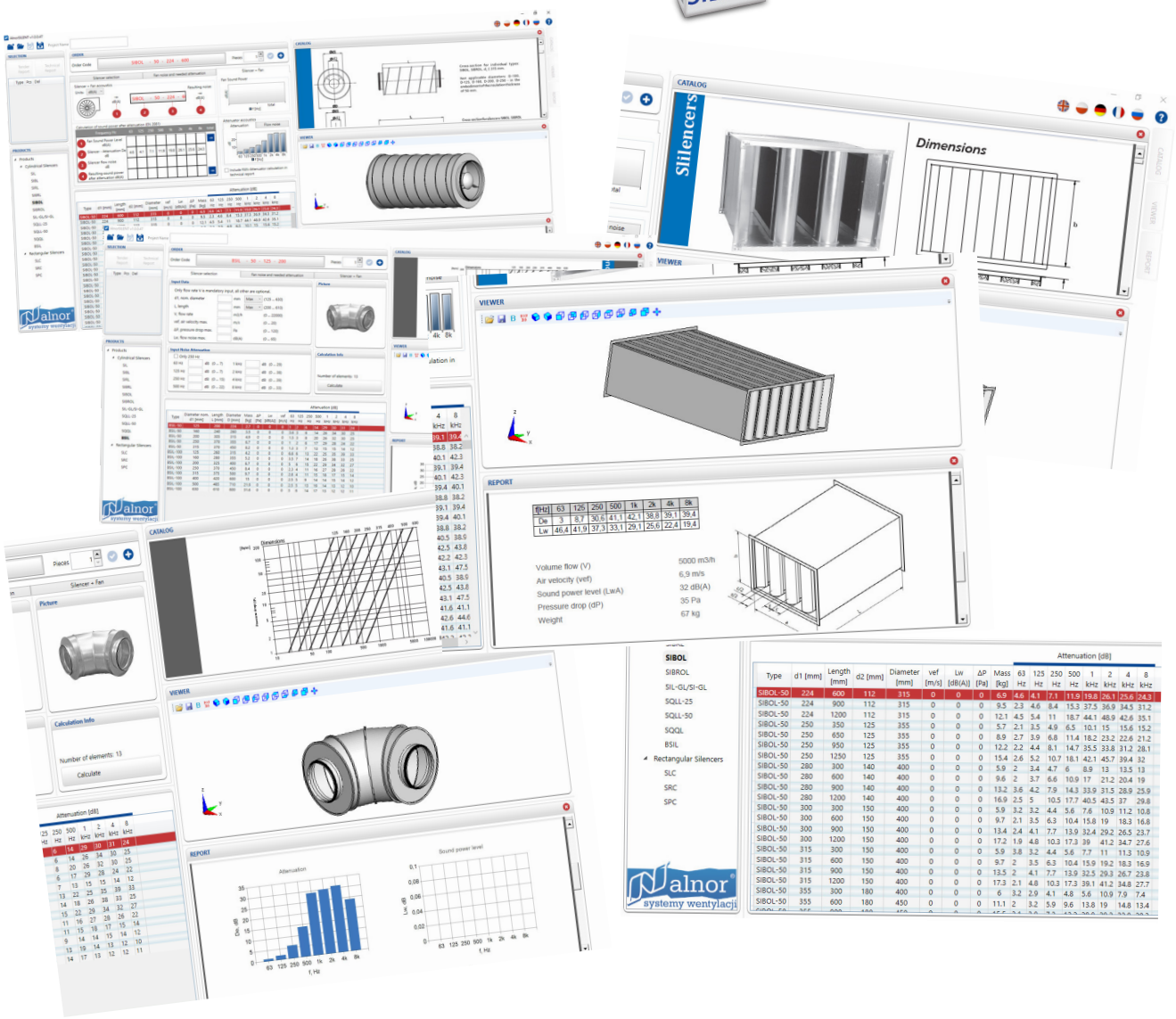

ALNOR® ventilation systems
is a registered trademark protected by a technical patent. All modification rights reserved.

Round silencers

SIL/SIBL/SIRL/SIBRL/SIBOL/SIBROL

Technical specifications

Design
The ducted silencers are made of a spiral coiled duct for the outer cladding with an inner cladding of perforated sheet. The clearance between the outer and inner cladding is filled with mineral wool, which is a sound-absorbing material.
The glass fibre cloth between the perforated inner cladding and the mineral wool keeps the mineral wool fibres from being entrained by the air flow.

Connections
The standard silencer versions are supplied with gaskets.
The silencer sizes d_1 > 315 mm require ordering the NSL male couplings.
Dimensions
The silencers are available with the connection diameter sizes from 80 mm to 800 mm and the standard length sizes of 300, 600, 900 or 1500, depending on the connection diameter.

Technical specifications
See the respective sections for dimensions, weight, sound insulation performance and pressure loss values of specific product types.

Dimensions

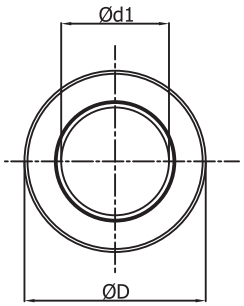

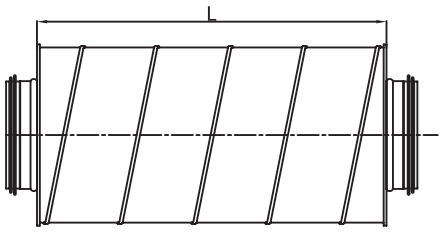

Cross-section for specific types of SIL and SIRL, $d_1 \leq 315$ mm.

Not applicable to the diameter sizes: D-100, D-125, D-160, D-200, D-250 with 50 mm thick insulation.

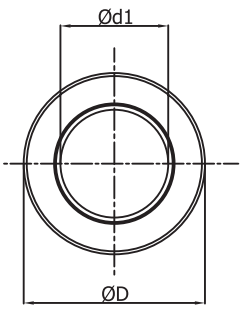

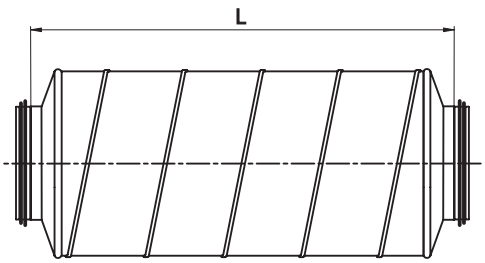

Cross-section of SIL and SIRL with 50 mm thick insulation; applies to the diameter sizes: D-100, D-125, D-160, D-200, D-250.

The silencers are fabricated with press-formed covers.

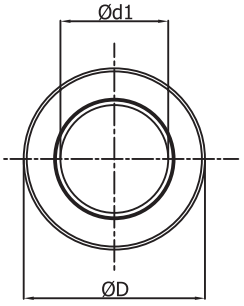

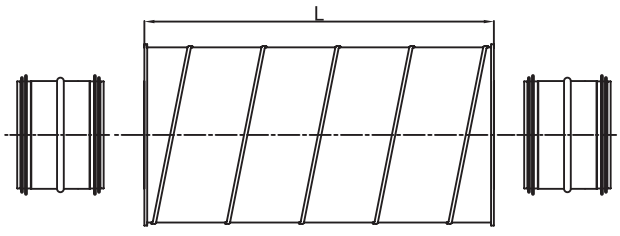

Cross-section for specific types of SIL, SIRL, d_1 > 315 mm

The female joint silencer versions for d_1 < 315 mm are designated SILF and SIRLF

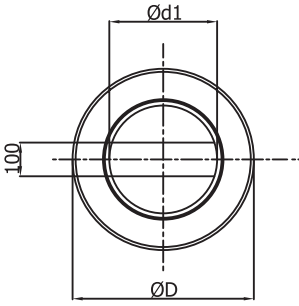

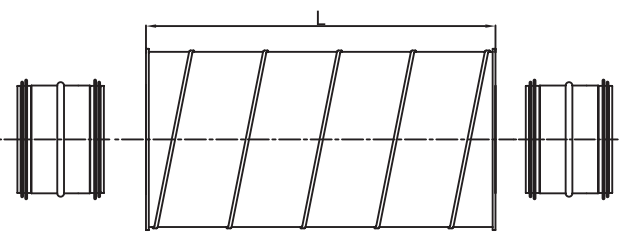

Cross-section for specific types of SIBL and SIBRL

The female joint silencer versions for d_1 < 315 mm are designated SIBLF and SIBRLF

ALNOR® ventilation systems
is a registered trademark protected by a technical patent. All modification rights reserved.

Round silencers

SIL



Description

The silencers are delivered with the SPIRAL® system seals in the standard version. The diameter sizes d_1 > 315 mm require ordering the NSL male couplings which need to be installed in the silencer before connecting the silencer to the ductwork. The male fittings are available separately. They are not delivered with the silencers. Glass wool thickness inside the silencer:
50 mm for SIL-50 - depends on the outer cladding size.
100 mm for SIL-100 - depends on the outer cladding size.
Insulation:
Insulation material: glass wool.
Insulation type: trimmed from reel, flexible.
Reaction to fire: A1 acc. to EN 13162

Available materials - Product code examples

SIL-...-...-...	- galvanized steel sheet
SIL-K-...-...-...	- 1.4301/304 stainless steel sheet
SIL-K-...-...-...-316L	- 1.4404/316L stainless steel sheet
SIL-A-...-...-...	- aluminium sheet
SIL-CU-...-...-...	- copper sheet

Product code examples

Product code: **SIL - iii - aaa - bbb**

type
Insulation thickness
Ød$_1$
L

Dimensions

For diameter $d_1 \leq 315$ mm

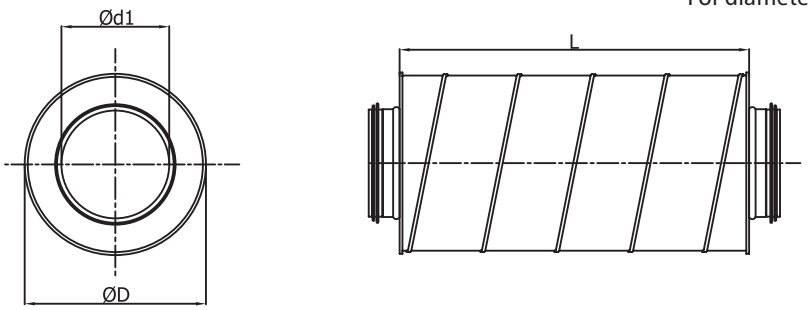

Cross-section for specific types of SIL and SIRL, $d_1 \leq 315$ mm.

Not applicable to the diameter sizes: D-100, D-125, D-160, D-200, D-250 with 50 mm thick insulation.

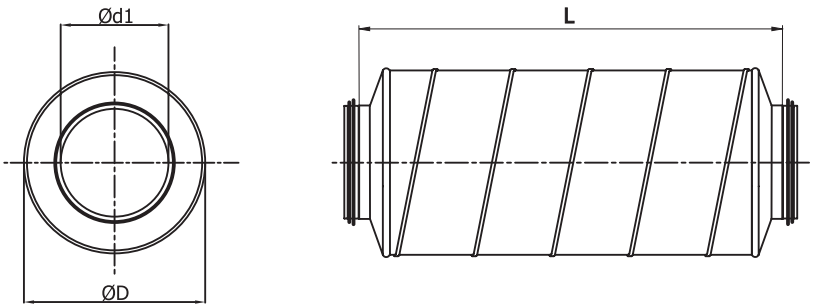

Cross-section of SIL and SIRL with 50 mm thick insulation; applies to the diameter sizes: D-100, D-125, D-160, D-200, D-250.

The silencers are fabricated with press-formed covers.

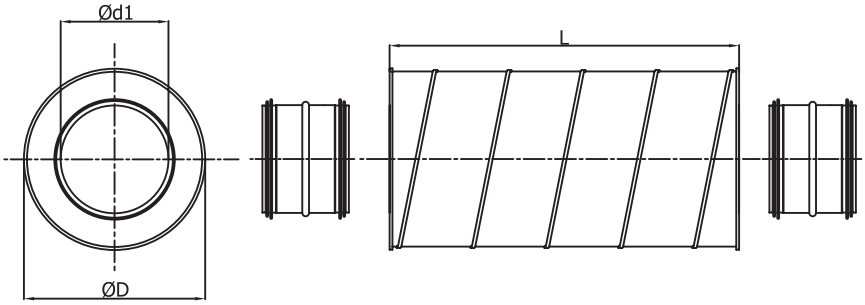

Cross-section for specific types of SIL and SIRL, $d_1 > 315$ mm

The female joint silencer versions for $d_1 < 315$ mm are designated SILF and SIRLF

ALNOR® ventilation systems
is a registered trademark protected by a technical patent. All modification rights reserved.

Dimensions

SIL-50 - 50 mm insulation

Description	Ød1 nom (mm)	Dnom (mm)	L (mm)	Sound insulation (dB) at frequency (Hz) 125	250	500	1000	2000	4000	8000	Weight (kg)
SIL 080-300	80	180	300	6	15	29	45	50	26	28	2
080-500	80	180	500	9	18	32	48	53	29	31	3
080-600	80	180	600	11	19	33	49	54	30	32	3
080-900	80	180	900	13	22	36	52	57	33	35	5
080-1000	80	180	1000	14	23	37	53	58	34	36	6
080-1200	80	180	1200								7
SIL *100-300	100	200	350	5	13	26	41	44	22	24	2
*100-500	100	200	550	8	16	29	44	47	26	27	3
*100-600	100	200	650	9	17	30	45	49	27	29	3
*100-900	100	200	950	12	19	32	48	51	29	31	5
*100-1000	100	200	1050	13	21	34	49	52	30	32	6
*100-1200	100	200	1250								7
SIL *125-300	125	224	350	4	11	22	37	41	19	21	3
*125-500	125	224	550	7	14	26	40	44	22	24	4
*125-600	125	224	650	8	15	27	41	45	24	25	4
*125-900	125	224	950	11	18	29	44	47	26	28	7
*125-1000	125	224	1050	12	19	31	45	49	27	29	7
*125-1200	125	224	1250								9
SIL 150-300	150	250	300	4	11	23	34	36	18	19	4
150-500	150	250	500	7	14	26	37	39	21	22	4
150-600	150	250	600	8	15	27	39	41	22	23	6
150-900	150	250	900	11	18	29	42	43	25	26	8
150-1000	150	250	1000	12	19	30	42	44	26	27	8
150-1200	150	250	1200								10
SIL *160-300	160	250	350	3	9	20	33	35	16	18	3
*160-500	160	250	550	6	12	23	36	38	19	21	5
*160-600	160	250	650	7	14	24	37	39	21	22	6
*160-900	160	250	950	10	16	26	40	42	23	25	8
*160-1000	160	250	1050	11	17	28	41	43	24	26	8
*160-1200	160	250	1250								10
SIL *200-300	200	300	350	2	7	16	31	31	15	16	4
*200-500	200	300	550	5	10	19	34	34	18	19	6
*200-600	200	300	650	6	11	20	35	35	19	20	7
*200-900	200	300	950	8	13	23	38	38	22	23	10
*200-1000	200	300	1050	9	15	24	39	39	23	24	11
*200-1200	200	300	1250								12
SIL *250-500	250	355	550	4	9	18	29	27	15	16	9
*250-600	250	355	650	5	11	19	30	28	16	18	11
*250-900	250	355	950	8	13	22	33	31	19	20	14
*250-1000	250	355	1050	9	14	23	33	32	20	21	12
*250-1200	250	355	1250	11	17	25	35	34	21	23	17
*250-1500	250	355	1550	12	18	26	37	35	23	24	20

Description	Ød1 nom (mm)	Dnom (mm)	L (mm)	Sound insulation (dB) at frequency (Hz) 125	250	500	1000	2000	4000	8000	Weight (kg)
SIL 300-500	300	400	500	4	8	16	25	23	13	15	13
300-600	300	400	600	5	10	18	27	25	14	16	15
300-900	300	400	900	7	12	20	30	27	17	18	16
300-1000	300	400	1000	8	13	21	30	28	18	19	19
300-1200	300	400	1200	10	15	23	32	30	20	21	22
300-1500	300	400	1500	12	17	24	34	32	21	23	25
SIL 315-500	315	400	500	4	7	14	23	21	13	14	11
315-600	315	400	600	5	8	16	25	19	14	15	12
315-900	315	400	900	7	11	18	28	21	17	18	16
315-1000	315	400	1000	8	12	19	28	22	18	19	16
315-1200	315	400	1200	10	14	21	30	24	19	21	19
315-1500	315	400	1500	12	16	23	32	26	21	22	25
SIL 355-600	355	450	600	4	9	16	22	17	13	14	13
355-900	355	450	900	7	11	19	25	19	16	17	18
355-1000	355	450	1000	8	12	20	26	21	17	18	20
355-1200	355	450	1200	10	15	22	27	22	18	20	22
355-1500	355	450	1500	11	16	23	29	24	20	21	27
SIL 400-600	400	500	600	4	8	15	20	15	12	13	15
400-900	400	500	900	6	10	18	23	17	15	16	20
400-1000	400	500	1000	8	12	19	24	18	16	17	22
400-1200	400	500	1200	9	14	21	25	20	17	19	25
400-1500	400	500	1500	11	15	22	27	22	19	20	31
SIL 450-600	450	560	600	4	8	16	18	13	12	12	23
450-900	450	560	900	6	11	18	21	16	15	15	27
450-1000	450	560	1000	7	12	19	22	17	16	16	29
450-1200	450	560	1200	9	14	21	23	18	17	17	31
450-1500	450	560	1500	11	16	23	25	20	19	19	36
SIL 500-600	500	600	600	3	7	14	17	11	11	12	32
500-900	500	600	900	6	9	16	20	14	13	14	42
500-1000	500	600	1000	7	11	17	21	15	14	15	51
500-1200	500	600	1250	9	13	19	22	17	16	17	59
500-1500	500	600	1500	10	14	20	24	18	17	19	72
SIL 560-900	560	630	900	6	9	15	19	13	12	14	31
560-1000	560	630	1000	7	10	16	20	14	13	15	34
560-1200	560	630	1200	9	13	18	21	15	15	16	39
SIL 630-900	630	710	900	5	8	14	18	11	12	13	34
630-1000	630	710	1000	6	10	16	18	12	13	14	39
630-1200	630	710	1200	8	12	17	20	14	14	15	42

*press-formed covers

ALNOR® ventilation systems
is a registered trademark protected by a technical patent. All modification rights reserved.

Round silencers
SIL

Pressure drop

SIL-50 - 50 mm insulation

Description	Pressure loss (Pa) at air flow velocity (m/s)				
	2	4	8	10	12
SIL-50-080-300	0.43	1.74	6.95	10.86	15.64
SIL-50-080-500	0.44	1.77	7.07	11.04	15.90
SIL-50-080-600	0.45	1.80	7.18	11.22	16.16
SIL-50-080-900	0.48	1.93	7.72	12.06	17.37
SIL-50-080-1000	0.50	2.01	8.03	12.54	18.06
SIL-50-080-1200					
SIL-50-100-300	0.36	1.42	5.68	8.88	12.79
SIL-50-100-500	0.36	1.44	5.76	9.00	12.96
SIL-50-100-600	0.37	1.47	5.88	9.18	13.22
SIL-50-100-900	0.40	1.61	6.45	10.08	14.52
SIL-50-100-1000	0.42	1.68	6.72	10.50	15.12
SIL-50-100-1200					
SIL-50-125-300	0.29	1.15	4.61	7.20	10.37
SIL-50-125-500	0.29	1.17	4.68	7.32	10.54
SIL-50-125-600	0.30	1.20	4.80	7.50	10.80
SIL-50-125-900	0.34	1.34	5.38	8.40	12.10
SIL-50-125-1000	0.35	1.41	5.64	8.82	12.70
SIL-50-125-1200					
SIL-50-150-300	0.34	1.34	5.38	8.40	12.10
SIL-50-150-500	0.34	1.36	5.45	8.52	12.27
SIL-50-150-600	0.35	1.39	5.57	8.70	12.53
SIL-50-150-900	0.38	1.54	6.14	9.60	13.82
SIL-50-150-1000	0.40	1.61	6.45	10.08	14.52
SIL-50-150-1200					
SIL-50-160-300	0.24	0.96	3.84	6.00	8.64
SIL-50-160-500	0.25	0.99	3.96	6.18	8.90
SIL-50-160-600	0.25	1.02	4.07	6.36	9.16
SIL-50-160-900	0.29	1.15	4.61	7.20	10.37
SIL-50-160-1000	0.31	1.23	4.92	7.68	11.06
SIL-50-160-1200					
SIL-50-200-300	0.17	0.67	2.69	4.20	6.05
SIL-50-200-500	0.17	0.69	2.76	4.32	6.22
SIL-50-200-600	0.18	0.72	2.88	4.50	6.48
SIL-50-200-900	0.22	0.86	3.46	5.40	7.78
SIL-50-200-1000	0.24	0.94	3.76	5.88	8.47
SIL-50-200-1200					
SIL-50-250-500	0.18	0.74	2.96	4.62	6.65
SIL-50-250-600	0.19	0.77	3.07	4.80	6.91
SIL-50-250-900	0.23	0.91	3.65	5.70	8.21
SIL-50-250-1000	0.25	0.99	3.96	6.18	8.90
SIL-50-250-1200	0.35	1.39	5.57	8.70	12.53
SIL-50-250-1500	0.40	1.58	6.34	9.90	14.26

Description	Pressure loss (Pa) at air flow velocity (m/s)				
	2	4	8	10	12
SIL-50-300-500	0.15	0.59	2.34	3.66	5.27
SIL-50-300-600	0.16	0.62	2.50	3.90	5.62
SIL-50-300-900	1.90	7.58	30.34	47.40	68.26
SIL-50-300-1000	0.21	0.84	3.34	5.22	7.52
SIL-50-300-1200	0.31	1.24	4.95	7.74	11.15
SIL-50-300-1500	0.37	1.50	5.99	9.36	13.48
SIL-50-315-500	0.12	0.50	2.00	3.12	4.49
SIL-50-315-600	0.13	0.53	2.11	3.30	4.75
SIL-50-315-900	0.17	0.67	2.69	4.20	6.05
SIL-50-315-1000	0.19	0.75	3.00	4.68	6.74
SIL-50-315-1200	0.29	1.15	4.61	7.20	10.37
SIL-50-315-1500	0.35	1.39	5.57	8.70	12.53
SIL-50-355-600	0.11	0.43	1.73	2.70	3.89
SIL-50-355-900	0.14	0.57	2.27	3.54	5.10
SIL-50-355-1000	0.16	0.64	2.57	4.02	5.79
SIL-50-355-1200	0.26	1.05	4.19	6.54	9.42
SIL-50-355-1500	0.33	1.33	5.34	8.34	12.01
SIL-50-400-600	0.09	0.37	1.50	2.34	3.37
SIL-50-400-900	0.13	0.52	2.07	3.24	4.67
SIL-50-400-1000	0.15	0.59	2.34	3.66	5.27
SIL-50-400-1200	0.25	1.00	3.99	6.24	8.99
SIL-50-400-1500	0.33	1.31	5.22	8.16	11.75
SIL-50-450-600	0.08	0.34	1.34	2.10	3.02
SIL-50-450-900	1.20	4.80	19.20	30.00	43.20
SIL-50-450-1000	0.14	0.56	2.23	3.48	5.01
SIL-50-450-1200	0.24	0.96	3.84	6.00	8.64
SIL-50-450-1500	0.31	1.25	4.99	7.80	11.23
SIL-50-500-600	0.07	0.29	1.15	1.80	2.59
SIL-50-500-900	0.11	0.43	1.73	2.70	3.89
SIL-50-500-1000	0.12	0.50	2.00	3.12	4.49
SIL-50-500-1200	0.23	0.91	3.65	5.70	8.21
SIL-50-500-1500	0.30	1.21	4.84	7.56	10.89
SIL-50-560-900	0.10	0.39	1.57	2.46	3.54
SIL-50-560-1000	0.12	0.47	1.88	2.94	4.23
SIL-50-560-1200	0.22	0.87	3.49	5.46	7.86
SIL-50-630-900	0.09	0.36	1.42	2.22	3.20
SIL-50-630-1000	0.11	0.43	1.73	2.70	3.89
SIL-50-630-1200	0.21	0.84	3.34	5.22	7.52

ALNOR® ventilation systems
is a registered trademark protected by a technical patent. All modification rights reserved.

Dimensions

SIL-100 - 100 mm insulation

Description	Ød1 nom (mm)	Dnom (mm)	L (mm)	Sound insulation (dB) at frequency (Hz) 125	250	500	1000	2000	4000	8000	Weight (kg)
SIL 100-500	100	300	500	20	29	40	44	52	27	27	6
100-600	100	300	600	21	30	44	48	53	29	28	7
100-900	100	300	900	22	34	52	57	57	32	31	9
100-1000	100	300	1000	22	34	55	60	58	33	33	11
100-1200	100	300	1200	24	37	58	64	61	34	34	12
SIL 125-300	125	315	300	17	24	38	42	51	26	28	5
125-500	125	315	500	18	26	36	42	49	25	25	8
125-600	125	315	600	18	26	36	42	49	25	25	8
125-900	125	315	900	20	30	48	55	54	29	30	11
125-1000	125	315	1000	20	31	51	58	55	31	31	13
125-1200	125	315	1200	21	34	54	62	58	31	33	13
SIL 150-300	150	355	300	15	21	33	37	44	23	25	5
150-500	150	355	500	20	29	40	44	52	27	27	9
150-600	150	355	600	17	25	36	41	43	23	24	10
150-900	150	355	900	18	28	44	50	47	26	27	13
150-1000	150	355	1000	18	28	47	53	48	28	28	15
150-1200	150	355	1200	24	37	58	64	61	34	34	18
SIL 160-300	160	355	300	16	21	29	34	41	20	23	7
160-500	160	355	500	17	23	28	34	39	19	20	9
160-600	160	355	600	17	24	32	38	40	21	21	10
160-900	160	355	900	18	27	40	47	44	24	25	14
160-1000	160	355	1000	19	28	43	50	45	25	26	14
160-1200	160	355	1200	20	31	46	54	48	26	28	17
SIL 200-300	200	400	300	13	18	27	29	36	18	21	8
200-500	200	400	500	14	20	25	28	34	17	18	12
200-600	200	400	600	14	21	29	33	35	19	19	12
200-900	200	400	900	15	25	38	42	39	22	22	16
200-1000	200	400	1000	16	25	41	45	40	23	24	16
200-1200	200	400	1200	17	28	43	48	43	24	26	20
SIL 250-500	250	450	500	11	17	22	26	29	15	16	16
250-600	250	450	600	12	18	26	30	30	17	17	14
250-900	250	450	900	13	22	34	39	34	20	20	20
250-1000	250	450	1000	14	22	37	42	35	21	22	17
250-1200	250	450	1200	15	25	40	46	38	22	23	24
250-1500	250	450	1500	16	29	44	51	42	23	26	28
SIL 315-500	315	500	500	10	16	17	22	25	13	14	14
315-600	315	500	600	14	17	21	26	26	15	15	16
315-900	315	500	900	12	20	39	35	30	18	19	21
315-1000	315	500	1000	12	21	32	38	31	19	20	22
315-1200	315	500	1200	14	24	35	42	34	22	23	26
315-1500	315	500	1500	15	28	39	47	38	21	25	35

Description	Ød1 nom (mm)	Dnom (mm)	L (mm)	Sound insulation (dB) at frequency (Hz) 125	250	500	1000	2000	4000	8000	Weight (kg)
SIL 355-600	355	560	600	10	15	20	23	23	13	14	26
355-900	355	560	900	11	19	28	32	27	16	18	29
355-1000	355	560	1000	11	19	31	35	28	18	19	33
355-1200	355	560	1200	13	22	34	39	31	18	21	33
355-1500	355	560	1500	14	26	38	44	35	19	24	47
SIL 400-600	400	600	600	9	15	18	21	20	12	11	21
400-900	400	600	900	11	18	26	30	24	14	14	30
400-1000	400	600	1000	11	18	29	33	25	16	16	29
400-1200	400	600	1200	12	22	32	37	28	16	17	41
400-1500	400	600	1500	14	26	36	42	32	17	20	51
SIL 450-600	450	630	600	9	14	16	18	17	10	10	32
450-900	450	630	900	10	17	24	27	21	13	13	40
450-1000	450	630	1000	10	18	27	30	22	15	15	36
450-1200	450	630	1200	11	21	30	34	25	15	16	46
450-1500	450	630	1500	13	25	34	39	29	16	19	56
SIL 500-600	500	710	600	8	13	14	15	15	10	9	23
500-900	500	710	900	10	16	22	24	19	13	13	35
500-1000	500	710	1000	10	17	25	27	20	14	14	39
500-1200	500	710	1200	11	20	28	31	23	15	16	43
500-1500	500	710	1500	13	24	32	36	27	16	19	50
SIL 560-900	560	800	900	5	9	15	19	13	12	14	39
560-1000	560	800	1000	7	10	16	20	14	13	15	53
560-1200	560	800	1200	9	13	18	21	15	15	16	56
560-1500	560	800	1500	10	14	20	24	18	17	19	46
SIL 630-900	630	800	900	8	15	20	22	17	11	11	50
630-1000	630	800	1000	9	15	23	25	18	12	12	48
630-1200	630	800	1200	10	18	26	29	21	13	14	58
630-1500	630	800	1500	11	22	29	34	25	14	17	66
SIL 710-1000	710	900	1000	8	14	20	23	16	11	10	59
710-1200	710	900	1200	9	17	23	27	18	11	12	64
710-1500	710	900	1500	11	21	26	30	22	12	15	73
SIL 800-1000	800	1000	1000	8	14	20	22	15	10	10	0
800-1200	800	1000	1200	9	17	22	25	18	11	12	73
800-1500	800	1000	1500	10	21	26	30	22	12	15	103
SIL 900-1000	900	1120	1000	7	13	19	20	13	9	10	80
900-1200	900	1120	1200	8	16	22	24	16	10	11	88
900-1500	900	1120	1500	10	20	26	29	20	11	14	95

ALNOR® ventilation systems
is a registered trademark protected by a technical patent. All modification rights reserved.

Round silencers
SIL

Pressure drop

SIL-100 - 100 mm insulation

Description	*Pressure loss (Pa) at air flow velocity (m/s)*				
	2	*4*	*8*	*10*	*12*
SIL-100-100-500	0.26	1.04	4.15	6.48	9.33
SIL-100-100-600	0.28	1.13	4.53	7.08	10.20
SIL-100-100-900	0.34	1.34	5.38	8.40	12.10
SIL-100-100-1000	0.35	1.40	5.61	8.76	12.61
SIL-100-100-1200	0.37	1.50	5.99	9.36	13.48
SIL-100-125-300	0.19	0.77	3.07	4.80	6.91
SIL-100-125-500	0.25	0.99	3.96	6.18	8.90
SIL-100-125-600	0.27	1.08	4.34	6.78	9.76
SIL-100-125-900	0.33	1.31	5.22	8.16	11.75
SIL-100-125-1000	0.34	1.36	5.45	8.52	12.27
SIL-100-125-1200	0.36	1.46	5.84	9.12	13.13
SIL-100-150-300	0.18	0.72	2.88	4.50	6.48
SIL-100-150-500	0.24	0.94	3.76	5.88	8.47
SIL-100-150-600	0.26	1.04	4.15	6.48	9.33
SIL-100-150-900	0.31	1.25	4.99	7.80	11.23
SIL-100-150-1000	0.33	1.31	5.22	8.16	11.75
SIL-100-150-1200	0.35	1.40	5.61	8.76	12.61
SIL-100-160-300	0.17	0.67	2.69	4.20	6.05
SIL-100-160-500	0.23	0.91	3.65	5.70	8.21
SIL-100-160-600	0.25	1.01	4.03	6.30	9.07
SIL-100-160-900	0.31	1.23	4.92	7.68	11.06
SIL-100-160-1000	0.32	1.29	5.15	8.04	11.58
SIL-100-160-1200	0.35	1.38	5.53	8.64	12.44
SIL-100-200-300	0.16	0.64	2.57	4.02	5.79
SIL-100-200-500	0.20	0.82	3.26	5.10	7.34
SIL-100-200-600	0.23	0.91	3.65	5.70	8.21
SIL-100-200-900	0.28	1.12	4.49	7.02	10.11
SIL-100-200-1000	0.30	1.18	4.72	7.38	10.63
SIL-100-200-1200	0.32	1.28	5.11	7.98	11.49
SIL-100-250-500	0.17	0.67	2.69	4.20	6.05
SIL-100-250-600	0.19	0.77	3.07	4.80	6.91
SIL-100-250-900	0.24	0.98	3.92	6.12	8.81
SIL-100-250-1000	0.26	1.04	4.15	6.48	9.33
SIL-100-250-1200	0.28	1.13	4.53	7.08	10.20
SIL-100-250-1500	0.31	1.25	4.99	7.80	11.23
SIL-100-315-600	0.14	0.57	2.27	3.54	5.10
SIL-100-315-900	0.19	0.78	3.11	4.86	7.00
SIL-100-315-1000	0.21	0.84	3.34	5.22	7.52
SIL-100-315-1200	0.23	0.93	3.72	5.82	8.38
SIL-100-315-1500	0.26	1.05	4.19	6.54	9.42

Description	*Pressure loss (Pa) at air flow velocity (m/s)*				
	2	*4*	*8*	*10*	*12*
SIL-100-355-500	0.12	0.47	1.88	2.94	4.23
SIL-100-355-600	0.11	0.44	1.77	2.76	3.97
SIL-100-355-900	0.17	0.66	2.65	4.14	5.96
SIL-100-355-1000	0.18	0.71	2.84	4.44	6.39
SIL-100-355-1200	0.20	0.81	3.23	5.04	7.26
SIL-100-355-1500	0.23	0.93	3.72	5.82	8.38
SIL-100-400-600	0.08	0.32	1.27	1.98	2.85
SIL-100-400-900	0.13	0.53	2.11	3.30	4.75
SIL-100-400-1000	0.15	0.59	2.34	3.66	5.27
SIL-100-400-1200	0.17	0.68	2.73	4.26	6.13
SIL-100-400-1500	0.20	0.80	3.19	4.98	7.17
SIL-100-450-600	0.05	0.19	0.77	1.20	1.73
SIL-100-450-900	0.10	0.40	1.61	2.52	3.63
SIL-100-450-1000	0.12	0.46	1.84	2.88	4.15
SIL-100-450-1200	0.14	0.56	2.23	3.48	5.01
SIL-100-450-1500	0.17	0.67	2.69	4.20	6.05
SIL-100-500-600	0.02	0.08	0.31	0.48	0.69
SIL-100-500-900	0.07	0.29	1.15	1.80	2.59
SIL-100-500-1000	0.09	0.35	1.38	2.16	3.11
SIL-100-500-1200	0.11	0.44	1.77	2.76	3.97
SIL-100-500-1500	0.14	0.56	2.23	3.48	5.01
SIL-100-560-900	0.05	0.19	0.77	1.21	1.74
SIL-100-560-1000	0.06	0.25	0.99	1.54	2.22
SIL-100-560-1200	0.09	0.34	1.37	2.15	3.09
SIL-100-560-1500	0.12	0.47	1.88	2.93	4.23
SIL-100-630-900	0.02	0.10	0.38	0.60	0.86
SIL-100-630-1000	0.04	0.14	0.58	0.90	1.30
SIL-100-630-1200	0.06	0.24	0.96	1.50	2.16
SIL-100-630-1500	0.09	0.36	1.46	2.28	3.28
SIL-100-710-1000	0.02	0.08	0.31	0.48	0.69
SIL-100-710-1200	0.04	0.17	0.69	1.08	1.56
SIL-100-710-1500	0.07	0.30	1.19	1.86	2.68
SIL-100-800-1000	0.01	0.04	0.15	0.24	0.35
SIL-100-800-1200	0.03	0.13	0.54	0.84	1.21
SIL-100-800-1500	0.06	0.25	1.00	1.56	2.25
SIL-100-900-1000	0.00	0.01	0.04	0.06	0.09
SIL-100-900-1200	0.03	0.11	0.42	0.66	0.95
SIL-100-900-1500	0.06	0.23	0.92	1.44	2.07

ALNOR® ventilation systems
is a registered trademark protected by a technical patent. All modification rights reserved.

Round silencers

SIBL



Description

The silencers are delivered with the SPIRAL® system seals in the standard version. The diameter sizes d_1 > 315 mm require ordering the NSL male couplings which need to be installed in the silencer before connecting the silencer to the ductwork. The male fittings are available separately. They are not delivered with the silencers.
Glass wool thickness inside the silencer:
100 mm for SIBL-10 - depends on the outer cladding size.
Insulation:
Insulation material: glass wool.
Insulation type: trimmed from reel, flexible.

Available materials - Product code examples

SIBL-...-...-...	- galvanized steel sheet
SIBL-K-...-...-...	- 1.4301/304 stainless steel sheet
SIBL-K-...-...-...-316L	- 1.4404/316L stainless steel sheet
SIBL-A-...-...-...	- aluminium sheet
SIBL-CU-...-...-...	- copper sheet

Product code examples
Product code: **SIBL - aaa - bbb**

type
Ød$_1$
L

Dimensions

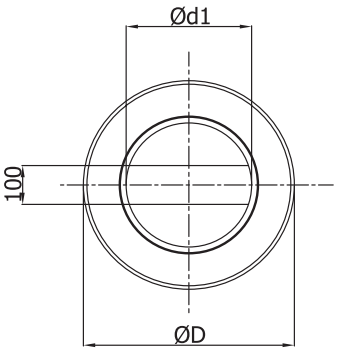

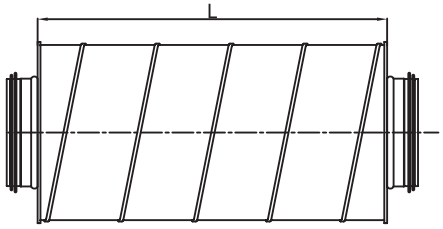

Cross-section for specific types of SIBL and SIBRL, $d_1 \leq 315$ mm.

Not applicable to the diameter sizes: D-100, D-125, D-160, D-200, D-250 with 50 mm thick insulation.

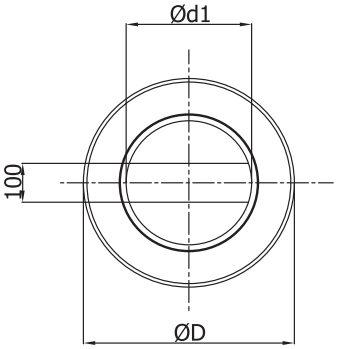

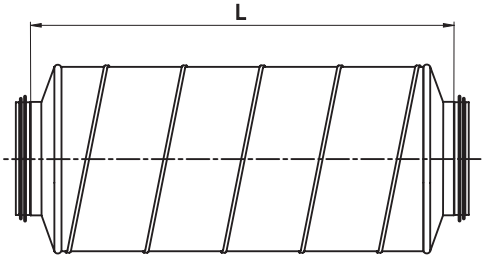

Cross-section of SIBL and SIBRL with 50 mm thick insulation; designed for the diameter sizes: D-100, D-125, D-160, D-200, D-250.

The silencers are fabricated with press-formed covers.

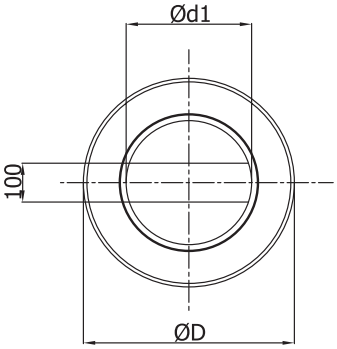

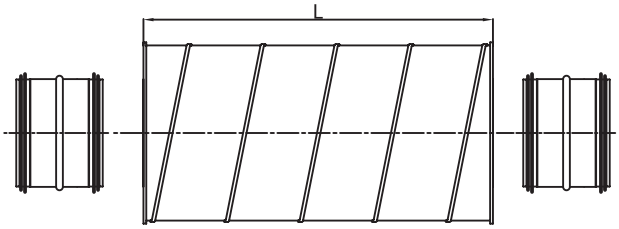

Cross-section for specific types of SIBL and SIBRL, $d_1 > 315$ mm.

The female joint silencer versions for $d_1 < 315$mm are designated SIBLF and SIBRLF

ALNOR® ventilation systems
is a registered trademark protected by a technical patent. All modification rights reserved.

Round silencers

SIBL

Dimensions

Description	Ød$_{1\ nom}$ (mm)	D$_{nom}$ (mm)	L (mm)	Sound insulation (dB) at frequency (Hz)						Weight (kg)
				125	250	500	1000	2000	4000	
SIBL 315-600	315	500	600	7	15	18	26	34	24	15
315-900	315	500	900	11	18	26	37	40	28	22
315-1200	315	500	1200	15	21	33	41	46	40	29
SIBL 400-600	400	600	600	8	9	16	22	24	19	20
400-900	400	600	900	11	14	22	34	32	23	30
400-1200	400	600	1200	11	21	30	38	43	28	40
SIBL 500-900	500	710	900	8	12	19	27	21	19	40
500-1200	500	710	1200	10	16	26	35	29	22	53
SIBL 630-1200	630	800	1200	8	11	23	38	23	19	62
630-1500	630	800	1500	10	15	23	39	26	20	78
SIBL 800-1200	800	1000	1200	5	9	17	23	21	16	80
800-1500	800	1000	1500	5	12	19	26	23	18	99

Technical specifications

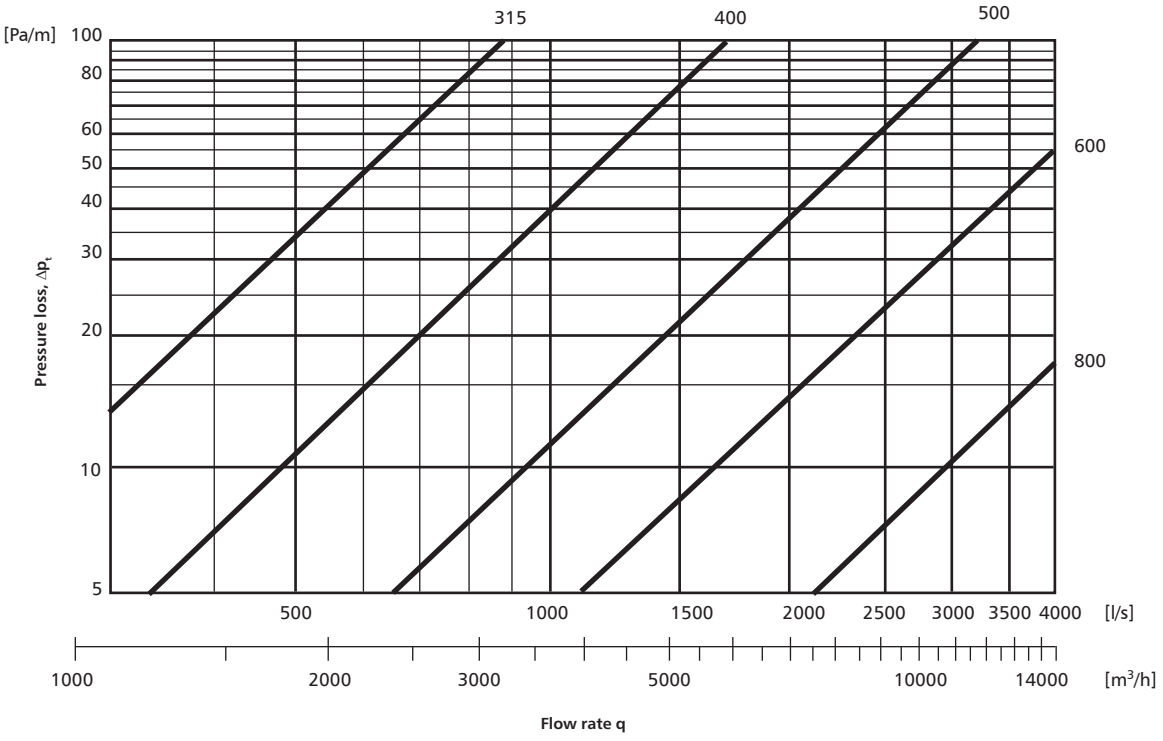

ALNOR® ventilation systems
is a registered trademark protected by a technical patent. All modification rights reserved.

SIBOL

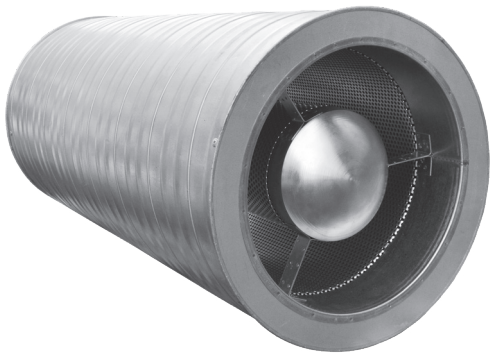

Description

The silencers are delivered with the SPIRAL® system seals in the standard version. The diameter sizes d_1 > 315 mm require ordering the NSL male couplings which need to be installed in the silencer before connecting the silencer to the ductwork. The male fittings are available separately. They are not delivered with the silencers.
Glass wool thickness inside the silencer:
50 mm for SIBOL-50 - depends on the outer cladding size.
100 mm for SIBOL-100 - depends on the outer cladding size.

Insulation:
Insulation material: glass wool.
Insulation type: trimmed from reel, flexible.

Product code examples
Product code: **SIBOL - iii - aaa - bbb**

type
Insulation thickness
Ød$_1$
L

Dimensions

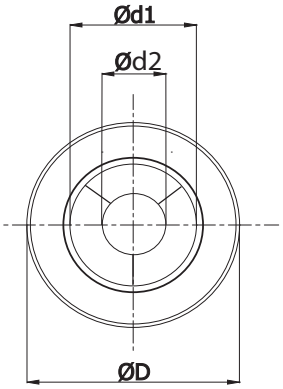

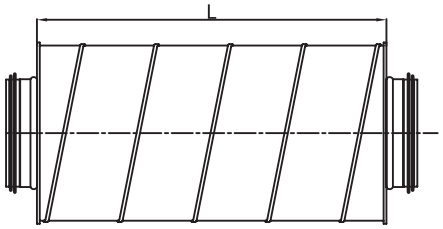

Cross-section for specific types of SIBOL, $d_1 \leq 315$ mm.

Not applicable to the diameter sizes: D-100, D-125, D-160, D-200, D-250 with 50 mm thick insulation.

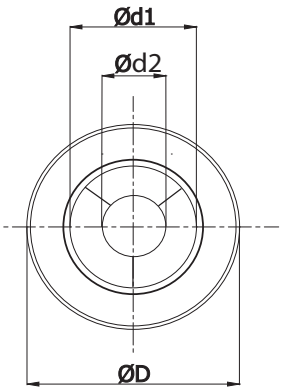

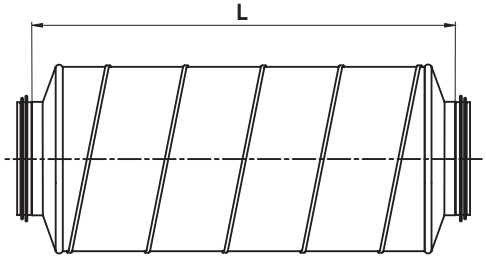

Cross-section of SIBOL with 50 mm thick insulation; designed for the diameter sizes: D-100, D-125, D-160, D-200, D-250.

The silencers are fabricated with press-formed covers.

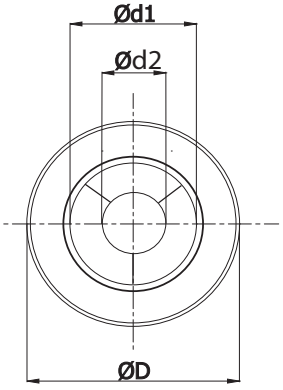

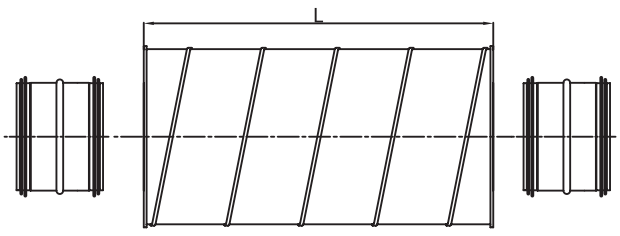

Cross-section for specific types of SIBOL, d_1 > 315 mm

ALNOR® ventilation systems
is a registered trademark protected by a technical patent. All modification rights reserved.

Round silencers

SIBOL

Dimensions

SIBOL-50 - 50 mm insulation

Description	Ød$_1$ (mm)	D (mm)	Ød$_2$ (mm)	L (mm)	Weight (kg)
SIBOL-50-200-300*	200	300	100	350	2.95
SIBOL-50-200-600*	200	300	100	650	5.60
SIBOL-50-200-900*	200	300	100	950	8.25
SIBOL-50-200-1200*	200	300	100	1250	10.95
SIBOL-50-224-300	224	315	112	300	3.70
SIBOL-50-224-600	224	315	112	600	7.10
SIBOL-50-224-900	224	315	112	900	10.45
SIBOL-50-224-1200	224	315	112	1200	13.85
SIBOL-50-250-300*	250	355	125	350	3.95
SIBOL-50-250-600*	250	355	125	650	7.50
SIBOL-50-250-900*	250	355	125	950	11.00
SIBOL-50-250-1200*	250	355	125	1250	14.55
SIBOL-50-280-300	280	400	140	300	4.50
SIBOL-50-280-600	280	400	140	600	8.55
SIBOL-50-280-900	280	400	140	900	12.55
SIBOL-50-280-1200	280	400	140	1200	16.60
SIBOL-50-300-300	300	400	150	300	4.65
SIBOL-50-300-600	300	400	150	600	8.85
SIBOL-50-300-900	300	400	150	900	13.00
SIBOL-50-300-1200	300	400	150	1200	17.15
SIBOL-50-315-300	315	400	150	300	5.00
SIBOL-50-315-600	315	400	150	600	9.50
SIBOL-50-315-900	315	400	150	900	14.00
SIBOL-50-315-1200	315	400	150	1200	18.50
SIBOL-50-355-300	355	400	180	300	5.60
SIBOL-50-355-600	355	450	180	600	10.55
SIBOL-50-355-900	355	450	180	900	15.50
SIBOL-50-355-1200	355	450	180	1200	20.45
SIBOL-50-400-300	400	500	200	300	6.00
SIBOL-50-400-600	400	500	200	600	11.20
SIBOL-50-400-900	400	500	200	900	16.45
SIBOL-50-400-1200	400	500	200	1200	21.65
SIBOL-50-450-300	450	560	225	300	7.85
SIBOL-50-450-600	450	560	225	600	14.75
SIBOL-50-450-900	450	560	225	900	21.60
SIBOL-50-450-1200	450	560	225	1200	28.50
SIBOL-50-500-300	500	600	250	300	8.75
SIBOL-50-500-600	500	600	250	600	16.40
SIBOL-50-500-900	500	600	250	900	24.10
SIBOL-50-500-1200	500	600	250	1200	31.70
SIBOL-50-560-300	560	630	280	300	9.80
SIBOL-50-560-600	560	630	280	600	18.30
SIBOL-50-560-900	560	630	280	900	26.75
SIBOL-50-560-1200	560	630	280	1200	35.25

Description	Ød$_1$ (mm)	D (mm)	Ød$_2$ (mm)	L (mm)	Weight (kg)
SIBOL-50-600-300	600	710	300	300	10.30
SIBOL-50-600-600	600	710	300	600	19.15
SIBOL-50-600-900	600	710	300	900	28.00
SIBOL-50-600-1200	600	710	300	1200	36.85
SIBOL-50-630-300	630	710	315	300	11.20
SIBOL-50-630-600	630	710	315	600	20.85
SIBOL-50-630-900	630	710	315	900	30.50
SIBOL-50-630-1200	630	710	315	1200	40.15
SIBOL-50-710-300	710	800	355	300	14.55
SIBOL-50-710-600	710	800	355	600	26.90
SIBOL-50-710-900	710	800	355	900	40.00
SIBOL-50-710-1200	710	800	355	1200	51.65
SIBOL-50-800-300	800	900	355	300	15.65
SIBOL-50-800-600	800	900	355	600	28.60
SIBOL-50-800-900	800	900	355	900	41.55
SIBOL-50-800-1200	800	900	355	1200	54.50
SIBOL-50-900-300	900	1000	450	300	18.25
SIBOL-50-900-600	900	1000	450	600	32.25
SIBOL-50-900-900	900	1000	450	900	46.50
SIBOL-50-900-1200	900	1000	450	1200	60.35
SIBOL-50-1000-300	1000	1120	500	300	21.30
SIBOL-50-1000-600	1000	1120	500	600	37.40
SIBOL-50-1000-900	1000	1120	500	900	52.50
SIBOL-50-1000-1200	1000	1120	500	1200	69.45

*press-formed covers

ALNOR® ventilation systems
is a registered trademark protected by a technical patent. All modification rights reserved.

Dimensions

SIBOL-100 - 100 mm insulation

Description	Ød$_1$ (mm)	D (mm)	Ød$_2$ (mm)	L (mm)	Weight (kg)
SIBOL-100-200-300	200	400	100	300	
SIBOL-100-200-600	200	400	100	600	
SIBOL-100-200-900	200	400	100	900	
SIBOL-100-200-1200	200	400	100	1200	
SIBOL-100-200-1500	200	400	100	1500	
SIBOL-100-224-300	224	450	112	300	
SIBOL-100-224-600	224	450	112	600	
SIBOL-100-224-900	224	450	112	900	
SIBOL-100-224-1200	224	450	112	1200	
SIBOL-100-224-1500	224	450	112	1500	
SIBOL-100-250-300	250	450	125	300	
SIBOL-100-250-600	250	450	125	600	
SIBOL-100-250-900	250	450	125	900	
SIBOL-100-250-1200	250	450	125	1200	
SIBOL-100-250-1500	250	450	125	1500	
SIBOL-100-280-300	280	500	140	300	
SIBOL-100-280-600	280	500	140	600	
SIBOL-100-280-900	280	500	140	900	
SIBOL-100-280-1200	280	500	140	1200	
SIBOL-100-280-1500	280	500	140	1500	
SIBOL-100-300-300	300	500	150	300	
SIBOL-100-300-600	300	500	150	600	
SIBOL-100-300-900	300	500	150	900	
SIBOL-100-300-1200	300	500	150	1200	
SIBOL-100-300-1500	300	500	150	1500	
SIBOL-100-315-300	315	500	150	300	
SIBOL-100-315-600	315	500	150	600	
SIBOL-100-315-900	315	500	150	900	
SIBOL-100-315-1200	315	500	150	1200	
SIBOL-100-315-1500	315	500	150	1500	
SIBOL-100-355-300	355	560	180	300	
SIBOL-100-355-600	355	560	180	600	
SIBOL-100-355-900	355	560	180	900	
SIBOL-100-355-1200	355	560	180	1200	
SIBOL-100-355-1500	355	560	180	1500	
SIBOL-100-400-300	400	600	200	300	
SIBOL-100-400-600	400	600	200	600	
SIBOL-100-400-900	400	600	200	900	
SIBOL-100-400-1200	400	600	200	1200	
SIBOL-100-400-1500	400	600	200	1500	
SIBOL-100-450-300	450	630	225	300	
SIBOL-100-450-600	450	630	225	600	
SIBOL-100-450-900	450	630	225	900	
SIBOL-100-450-1200	450	630	225	1200	

Description	Ød$_1$ (mm)	D (mm)	Ød$_2$ (mm)	L (mm)	Weight (kg)
SIBOL-100-500-300	500	710	250	300	
SIBOL-100-500-600	500	710	250	600	
SIBOL-100-500-900	500	710	250	900	
SIBOL-100-500-1200	500	710	250	1200	
SIBOL-100-500-1500	500	710	250	1500	
SIBOL-100-560-300	560	800	280	300	
SIBOL-100-560-600	560	800	280	600	
SIBOL-100-560-900	560	800	280	900	
SIBOL-100-560-1200	560	800	280	1200	
SIBOL-100-560-1500	560	800	280	1500	
SIBOL-100-600-300	600	800	300	300	
SIBOL-100-600-600	600	800	300	600	
SIBOL-100-600-900	600	800	300	900	
SIBOL-100-600-1200	600	800	300	1200	
SIBOL-100-600-1500	600	800	300	1500	
SIBOL-100-630-300	630	800	315	300	
SIBOL-100-630-600	630	800	315	600	
SIBOL-100-630-900	630	800	315	900	
SIBOL-100-630-1200	630	800	315	1200	
SIBOL-100-630-1500	630	800	315	1500	
SIBOL-100-710-300	710	900	355	300	
SIBOL-100-710-600	710	900	355	600	
SIBOL-100-710-900	710	900	355	900	
SIBOL-100-710-1200	710	900	355	1200	
SIBOL-100-710-1500	710	900	355	1500	
SIBOL-100-800-300	800	1000	355	300	
SIBOL-100-800-600	800	1000	355	600	
SIBOL-100-800-900	800	1000	355	900	
SIBOL-100-800-1200	800	1000	355	1200	
SIBOL-100-800-1500	800	1000	355	1500	
SIBOL-100-1000-300	1000	1120	450	300	
SIBOL-100-1000-600	1000	1250	450	600	
SIBOL-100-1000-900	1000	1250	450	900	
SIBOL-100-1000-1200	1000	1250	450	1200	
SIBOL-100-1000-1500	1000	1250	450	1500	

ALNOR® ventilation systems
is a registered trademark protected by a technical patent. All modification rights reserved.

Round silencers
SIBOL

Sound insulation

SIBOL-100 - 100 mm insulation

Description	Sound insulation (dB) at frequency (Hz)						
	125	250	500	1000	2000	4000	8000
SIBOL 200-300	7	10	12	19	25	26	22
200-600	7	13	20	30	34	34	28
200-900	9	16	29	44	43	41	35
200-1200	10	21	35	51	56	50	39
200-1500	10	24	43	63	65	58	45
SIBOL 224-300	6	9	11	16	21	22	18
224-600	7	13	19	28	31	30	24
224-900	8	16	28	41	40	37	31
224-1200	10	21	34	49	52	46	35
224-1500	10	24	42	60	61	54	41
SIBOL 250-300	6	9	10	14	18	18	15
250-600	7	12	18	26	27	26	21
250-900	8	15	27	39	36	34	28
250-1200	9	20	33	46	49	43	32
250-1500	9	23	41	58	58	51	38
SIBOL 280-300	6	8	10	13	15	16	13
280-600	6	12	17	24	25	24	19
280-900	8	15	26	37	34	31	26
280-1200	9	20	32	45	47	40	30
280-1500	9	23	40	56	56	48	36
SIBOL 300-300	5	8	9	11	13	13	11
300-600	6	11	17	22	22	21	17
300-900	7	14	25	36	31	29	24
300-1200	9	19	31	43	44	38	28
300-1500	9	22	39	55	56	46	34
SIBOL 315-300	5	8	9	11	13	13	11
315-600	6	11	17	22	23	21	17
315-900	7	14	25	36	31	29	24
315-1200	9	19	31	43	44	38	28
315-1500	9	22	39	55	53	46	34
SIBOL 355-300	5	7	8	8	13	9	7
355-600	5	11	15	19	22	17	13
355-900	7	14	24	33	31	25	20
355-1200	8	19	30	40	44	34	24
355-1500	8	22	38	52	53	42	31
SIBOL 400-300	5	7	7	6	13	7	5
400-600	5	10	14	17	23	15	11
400-900	6	13	23	31	31	22	18
400-1200	8	18	29	38	40	31	22
400-1500	8	21	37	50	49	39	28
SIBOL 450-300	4	6	6	4	9	4	3
450-600	5	10	14	16	19	13	9
450-900	6	13	22	29	28	20	16
450-1200	8	18	28	36	38	29	20
450-1500	7	21	36	48	47	37	26

Description	Sound insulation (dB) at frequency (Hz)						
	125	250	500	1000	2000	4000	8000
SIBOL 500-300	4	6	5	3	6	3	2
500-600	4	9	13	14	16	11	8
500-900	6	12	21	28	25	18	15
500-1200	7	17	27	35	36	27	19
500-1500	7	20	35	47	44	35	25
SIBOL 560-300	4	6	4	1	4	1	0
560-600	4	9	12	13	14	9	6
560-900	6	12	21	26	23	16	13
560-1200	7	17	27	33	34	25	17
560-1500	7	20	35	45	43	33	23
SIBOL 600-300	4	5	4	1	2	1	0
600-600	4	9	12	12	12	8	6
600-900	6	12	20	26	21	16	13
600-1200	7	17	26	33	32	25	17
600-1500	7	20	34	45	41	33	23
SIBOL 630-300	3	5	4	0	1	0	-1
630-600	4	9	12	12	10	8	6
630-900	5	12	20	25	19	15	12
630-1200	7	17	26	33	31	24	16
630-1500	7	20	34	44	40	32	23
SIBOL 710-300	3	5	3	-2	0	-2	-2
710-600	4	8	11	10	10	6	4
710-900	5	11	19	23	19	13	11
710-1200	6	16	25	30	31	22	15
710-1500	6	19	33	42	40	30	21
SIBOL 800-300	3	4	2	-3	-1	-4	-4
800-600	3	8	10	8	9	4	2
800-900	5	11	18	21	18	12	9
800-1200	6	16	24	29	29	20	13
800-1500	6	18	32	40	36	28	19
SIBOL 1000-300	2	4	1	-6	-5	-6	-6
1000-600	3	7	9	6	5	2	1
1000-900	4	10	17	19	14	10	7
1000-1200	6	15	23	27	25	18	11
1000-1500	6	18	31	38	33	26	18

ALNOR® ventilation systems
is a registered trademark protected by a technical patent. All modification rights reserved.

Pressure drop

SIBOL-100 - 100 mm insulation

Description	Pressure loss (Pa) at air flow velocity (m/s)				
	2	4	8	10	12
SIBOL-100-200-300	2.46	9.86	39.44	61.62	88.73
SIBOL-100-200-600	2.93	11.71	46.85	73.20	105.41
SIBOL-100-200-900	3.65	14.59	58.37	91.20	131.33
SIBOL-100-200-1200	3.88	15.52	62.09	97.02	139.71
SIBOL-100-200-1500	4.17	16.70	66.79	104.35	150.27
SIBOL-100-224-300	2.27	9.08	36.33	56.77	81.75
SIBOL-100-224-600	2.73	10.94	43.75	68.35	98.43
SIBOL-100-224-900	3.45	13.81	55.26	86.34	124.33
SIBOL-100-224-1200	3.69	14.75	58.99	92.17	132.73
SIBOL-100-224-1500	3.97	15.89	63.58	99.34	143.05
SIBOL-100-250-300	2.07	8.28	33.13	51.76	74.54
SIBOL-100-250-600	2.53	10.13	40.54	63.34	91.21
SIBOL-100-250-900	3.25	13.02	52.07	81.36	117.16
SIBOL-100-250-1200	3.49	13.95	55.78	87.16	125.51
SIBOL-100-250-1500	4.06	16.22	64.90	101.40	146.02
SIBOL-100-280-300	2.15	8.61	34.44	53.82	77.50
SIBOL-100-280-600	2.62	10.46	41.86	65.40	94.18
SIBOL-100-280-900	3.34	13.34	53.38	83.40	120.10
SIBOL-100-280-1200	3.57	14.28	57.10	89.22	128.48
SIBOL-100-280-1500	3.64	14.56	58.26	91.03	131.08
SIBOL-100-300-300	1.74	6.95	27.81	43.45	62.56
SIBOL-100-300-600	2.20	8.80	35.22	55.03	79.24
SIBOL-100-300-900	2.92	11.68	46.73	73.02	105.15
SIBOL-100-300-1200	3.15	12.62	50.46	78.85	113.54
SIBOL-100-300-1500	3.65	14.60	58.41	91.26	131.41
SIBOL-100-315-300	1.75	6.99	27.96	43.68	62.90
SIBOL-100-315-600	2.21	8.84	35.37	55.26	79.57
SIBOL-100-315-900	2.93	11.72	46.89	73.26	105.49
SIBOL-100-315-1200	3.16	12.65	50.61	79.08	113.88
SIBOL-100-315-1500	3.34	13.37	53.48	83.57	120.34
SIBOL-100-355-300	1.18	4.73	18.92	29.57	42.58
SIBOL-100-355-600	0.64	2.58	10.31	16.10	23.19
SIBOL-100-355-900	2.62	10.49	41.97	65.58	94.44
SIBOL-100-355-1200	2.86	11.42	45.69	71.39	102.80
SIBOL-100-355-1500	2.88	11.52	46.08	72.00	103.68
SIBOL-100-400-300	0.98	3.91	15.63	24.42	35.16
SIBOL-100-400-600	1.44	5.76	23.04	36.00	51.84
SIBOL-100-400-900	2.16	8.64	34.56	54.00	77.76
SIBOL-100-400-1200	2.39	9.57	38.28	59.82	86.14
SIBOL-100-400-1500	2.90	11.61	46.43	72.54	104.46
SIBOL-100-450-300	1.00	3.99	15.97	24.96	35.94
SIBOL-100-450-600	1.46	5.85	23.39	36.54	52.62
SIBOL-100-450-900	2.18	8.73	34.91	54.54	78.54
SIBOL-100-450-1200	2.41	9.66	38.63	60.36	86.92
SIBOL-100-450-1500	2.71	10.84	43.35	67.73	97.54

Description	Pressure loss (Pa) at air flow velocity (m/s)				
	2	4	8	10	12
SIBOL-100-500-300	0.81	3.22	12.90	20.15	29.02
SIBOL-100-500-600	1.27	5.08	20.31	31.73	45.70
SIBOL-100-500-900	1.99	7.96	31.83	49.74	71.63
SIBOL-100-500-1200	2.22	8.89	35.55	55.55	80.00
SIBOL-100-500-1500	2.64	10.56	42.24	66.00	95.04
SIBOL-100-560-300	0.74	2.95	11.79	18.42	26.52
SIBOL-100-560-600	1.20	4.80	19.20	30.00	43.20
SIBOL-100-560-900	1.92	7.68	30.72	48.00	69.12
SIBOL-100-560-1200	2.15	8.61	34.44	53.82	77.50
SIBOL-100-560-1500	2.38	9.51	38.03	59.42	85.56
SIBOL-100-600-300	0.47	1.89	7.58	11.84	17.05
SIBOL-100-600-600	0.94	3.75	14.99	23.42	33.72
SIBOL-100-600-900	1.66	6.62	26.50	41.40	59.62
SIBOL-100-600-1200	1.89	7.56	30.23	47.24	68.02
SIBOL-100-600-1500	2.29	9.15	36.61	57.20	82.37
SIBOL-100-630-300	0.38	1.54	6.16	9.62	13.85
SIBOL-100-630-600	0.85	3.39	13.57	21.20	30.53
SIBOL-100-630-900	1.57	6.27	25.08	39.18	56.42
SIBOL-100-630-1200	1.80	7.20	28.81	45.02	64.83
SIBOL-100-630-1500	2.07	8.28	33.12	51.74	74.51
SIBOL-100-710-300	0.17	0.67	2.66	4.16	6.00
SIBOL-100-710-600	0.63	2.52	10.08	15.74	22.67
SIBOL-100-710-900	1.35	5.40	21.58	33.72	48.56
SIBOL-100-710-1200	1.58	6.33	25.32	39.56	56.97
SIBOL-100-710-1500	1.79	7.16	28.63	44.74	64.43
SIBOL-100-800-300	-0.11	-0.45	-1.82	-2.84	-4.09
SIBOL-100-800-600	0.35	1.40	5.59	8.74	12.59
SIBOL-100-800-900	1.07	4.28	17.13	26.76	38.53
SIBOL-100-800-1200	1.30	5.21	20.84	32.56	46.89
SIBOL-100-800-1500	1.39	5.56	22.23	34.73	50.01
SIBOL-100-1000-300	-0.51	-2.06	-8.23	-12.85	-18.51
SIBOL-100-1000-600	-0.05	-0.20	-0.81	-1.27	-1.83
SIBOL-100-1000-900	0.67	2.68	10.71	16.74	24.11
SIBOL-100-1000-1200	0.90	3.61	14.43	22.55	32.47
SIBOL-100-1000-1500	0.72	2.88	11.52	18.00	25.92

ALNOR® ventilation systems
is a registered trademark protected by a technical patent. All modification rights reserved.

Round silencers

SIRL



Description

The silencers are delivered with the SPIRAL® system seals in the standard version. The diameter sizes d_1 > 315 mm require ordering the NSL male couplings which need to be installed in the silencer before connecting the silencer to the ductwork. The male fittings are available separately. They are not delivered with the silencers. Rock wool thickness inside the silencer:
100 mm for SIRL-10 - depends on the outer cladding size.
150 mm for SIRL-15 - depends on the outer cladding size.

Insulation:
Insulation material: rock wool.
Insulation type: trimmed from reel, flexible.

Available materials - Product code examples

SIRL-...-...-...	- galvanized steel sheet
SIRL-K-...-...-...	- 1.4301/304 stainless steel sheet
SIRL-K-...-...-...-316L	- 1.4404/316L stainless steel sheet
SIRL-A-...-...-...	- aluminium sheet
SIRL-CU-...-...-...	- copper sheet

Product code examples

Product code: **SIRL - iii - aaa - bbb**

type
Insulation thickness
Ød$_1$
L

Dimensions

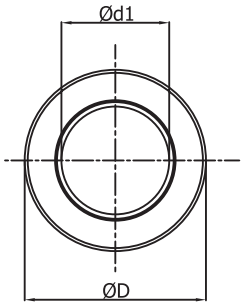

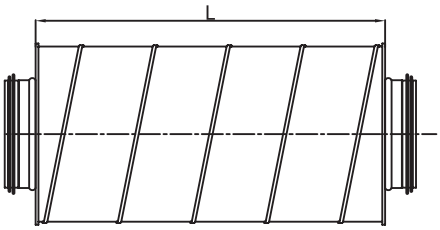

Cross-section for specific types of SIL and SIRL, $d_1 \leq 315$ mm.

Not applicable to the diameter sizes: D-100, D-125, D-160, D-200, D-250 with 50 mm thick insulation.

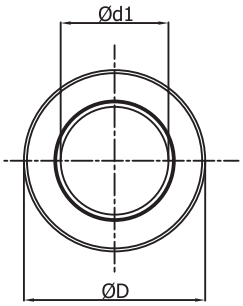

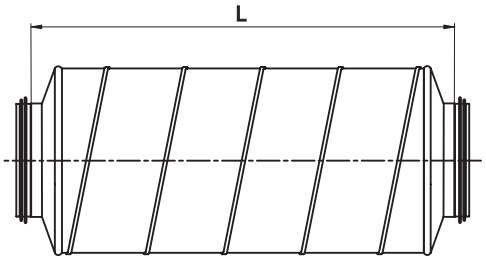

Cross-section of SIL and SIRL with 50 mm thick insulation; applies to the diameter sizes: D-100, D-125, D-160, D-200, D-250.

The silencers are fabricated with press-formed covers.

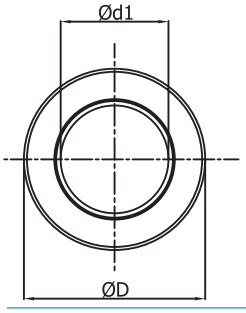

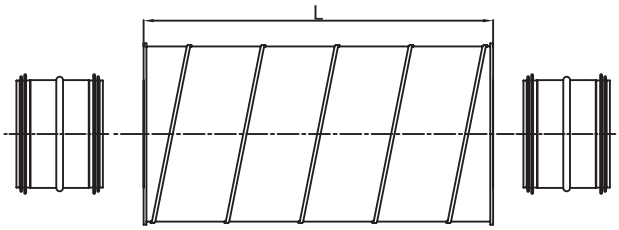

Cross-section for specific types of SIL and SIRL, d_1 > 315 mm

ALNOR® ventilation systems
is a registered trademark protected by a technical patent. All modification rights reserved.

Dimensions

SIRL-10 - 100 mm insulation

Description	Ød 1 nom (mm)	D nom (mm)	L (mm)	Sound insulation (dB) at frequency (Hz) 125	250	500	1000	2000	4000	Weight (kg)
SIRL 80-300	80	280	300	8	13	19	27	33	29	4
80-600	80	280	600	17	26	29	53	53	45	6
80-900	80	280	900	25	23	32	55	56	46	9
80-1000	80	280	1000	24	27	33	55	58	47	10
SIRL 100-300	100	300	300	6	12	18	23	28	23	5
100-600	100	300	600	13	23	34	46	52	40	8
100-900	100	300	900	17	30	39	54	55	46	10
100-1000	100	300	1000	19	36	39	56	51	40	11
SIRL 125-300	125	315	300	6	10	15	19	23	18	5
125-600	125	315	600	11	20	30	40	45	30	8
125-900	125	315	900	15	27	38	56	62	39	11
125-1000	125	315	1000	16	31	35	48	51	30	11
125-1200	125	315	1200	15	34	38	56	59	45	13
SIRL 160-300	160	355	300	4	8	12	16	21	14	6
160-600	160	355	600	9	16	28	33	37	21	9
160-900	160	355	900	11	24	35	49	51	27	12
160-1000	160	355	1000	12	25	38	54	54	29	14
160-1200	160	355	1200	12	29	41	56	57	33	16
SIRL 200-600	200	400	600	6	12	22	28	28	18	12
200-900	200	400	900	8	18	28	40	37	23	17
200-1000	200	400	1000	9	21	29	44	38	25	19
200-1200	200	400	1200	10	25	33	50	42	27	23
SIRL 250-600	250	450	600	5	12	20	24	23	14	14
250-900	250	450	900	6	17	30	34	28	17	20
250-1000	250	450	1000	7	18	31	36	30	18	20
250-1200	250	450	1200	9	22	35	39	33	20	26
SIRL 315-600	315	500	600	4	8	14	17	14	12	16
315-900	315	500	900	4	12	21	26	19	15	22
315-1000	315	500	1000	5	13	23	29	20	16	26
315-1200	315	500	1200	7	15	28	35	24	18	29
SIRL 400-900	400	600	900	5	12	19	22	18	13	29
400-1000	400	600	1000	5	13	22	24	20	14	31
400-1200	400	600	1200	7	16	22	29	22	15	36
400-1500	400	600	1500	9	20	32	35	24	17	43
SIRL 500-900	500	710	900	4	11	18	16	14	11	35
500-1000	500	710	1000	5	12	19	18	15	12	38
500-1200	500	710	1200	6	13	21	21	17	14	43
500-1500	500	710	1500	7	19	27	26	19	15	52
SIRL 630-900	630	900	900	5	8	14	12	13	9	44
630-1000	630	900	1000	5	10	15	13	14	10	49
630-1200	630	900	1200	6	13	18	15	15	12	56
630-1500	630	900	1500	7	15	23	18	17	13	69
SIRL 800-1000	800	1000	1000	4	8	11	9	9	8	70
800-1200	800	1000	1200	5	9	13	11	11	9	80
800-1500	800	1000	1500	6	12	17	14	14	11	88

SIRL-15 - 150 mm insulation

Description	Ød 1 nom (mm)	D nom (mm)	L (mm)	Sound insulation (dB) at frequency (Hz) 125	250	500	1000	2000	4000	Weight (kg)
SIRL 80-1000	80	400	1000	26	22	27	50	55	47	19
SIRL 100-1000	100	400	1000	25	36	42	59	53	47	21
SIRL 125-1000	125	450	1000	22	34	38	51	50	40	22
125-1200	125	450	1200	21	36	40	62	55	46	25
SIRL 160-1000	160	450	1000	16	28	40	51	52	28	22
160-1200	160	450	1200	17	33	44	58	56	32	25
SIRL 200-1000	200	500	1000	14	24	32	45	36	24	26
200-1200	200	500	1200	15	25	36	49	42	26	31
SIRL 250-1000	250	560	1000	12	22	31	37	31	18	30
250-1200	250	560	1200	15	26	36	41	34	20	35

ALNOR® ventilation systems
is a registered trademark protected by a technical patent. All modification rights reserved.

Round silencers

SIBRL



Description

The silencers are delivered with the SPIRAL® system seals in the standard version. The diameter sizes d_1 > 315 mm require ordering the NSL male couplings which need to be installed in the silencer before connecting the silencer to the ductwork. The male fittings are available separately. They are not delivered with the silencers. Rock wool thickness inside the silencer: **100 mm for SIBRL-10** - depends on the outer cladding size.

Insulation:
Insulation material: rock wool.
Insulation type: trimmed from reel, flexible.

Available materials - Product code examples

SIBRL-...-...-...	- galvanized steel sheet
SIBRL-K-...-...-...	- 1.4301/304 stainless steel sheet
SIBRL-K-...-...-...-316L	- 1.4404/316L stainless steel sheet
SIBRL-A-...-...-...	- aluminium sheet
SIBRL-CU-...-...-...	- copper sheet

Product code examples
Product code: **SIBRL - aaa - bbb**

type
Ød$_1$
L

Dimensions

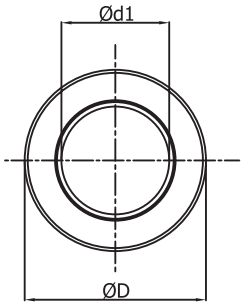

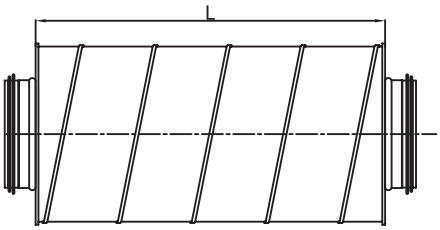

Cross-section for specific types of SIBL and SIBRL, $d_1 \leq 315$ mm.

Not applicable to the diameter sizes: D-100, D-125, D-160, D-200, D-250 with 50 mm thick insulation.

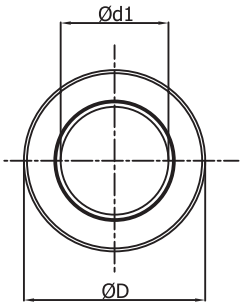

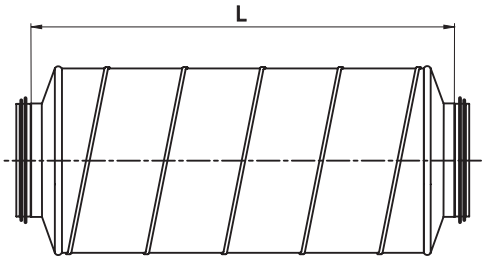

Cross-section of SIBL and SIBRL with 50 mm thick insulation; designed for the diameter sizes: D-100, D-125, D-160, D-200, D-250.

The silencers are fabricated with press-formed covers.

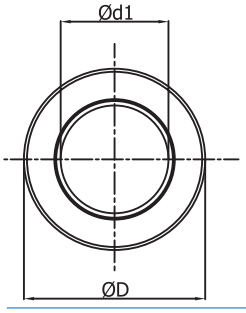

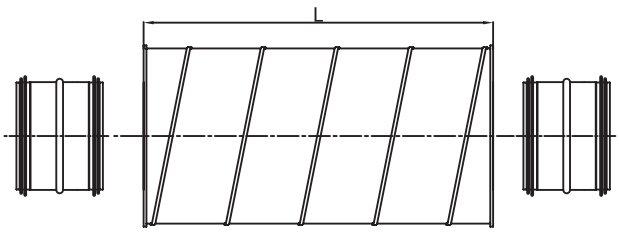

Cross-section for specific types of SIBL and SIBRL, d_1 > 315 mm

ALNOR® ventilation systems
is a registered trademark protected by a technical patent. All modification rights reserved.

SIBRL

Dimensions

SIBRL-10 - 100 mm insulation

Description	Ød1 nom (mm)	Dnom (mm)	L (mm)	Sound insulation (dB) at frequency (Hz) 125	250	500	1000	2000	4000	Weight (kg)
SIBRL 315-1000	315	500	1000	8	20	34	43	52	37	30
315-1200	315	500	1200	11	22	37	46	54	40	35
SIBRL 400-1000	400	600	1000	8	18	30	37	42	28	39
400-1200	400	600	1200	10	22	33	44	44	31	43
400-1500	400	600	1500	12	27	29	47	47	34	53
SIBRL 500-1000	500	710	1000	7	16	26	31	32	20	46
500-1200	500	710	1200	8	17	29	37	37	22	53
500-1500	500	710	1500	9	25	37	45	43	25	67
SIBRL 630-1000	630	900	1000	6	14	21	26	24	16	59
630-1200	630	900	1200	8	16	26	30	27	18	68
630-1500	630	900	1500	9	20	31	37	31	20	87
SIBRL 800-1000	800	1000	1000	5	10	17	21	20	14	84
800-1200	800	1000	1200	6	12	19	24	23	16	99
800-1500	800	1000	1500	7	16	25	30	26	18	112

Dimensions

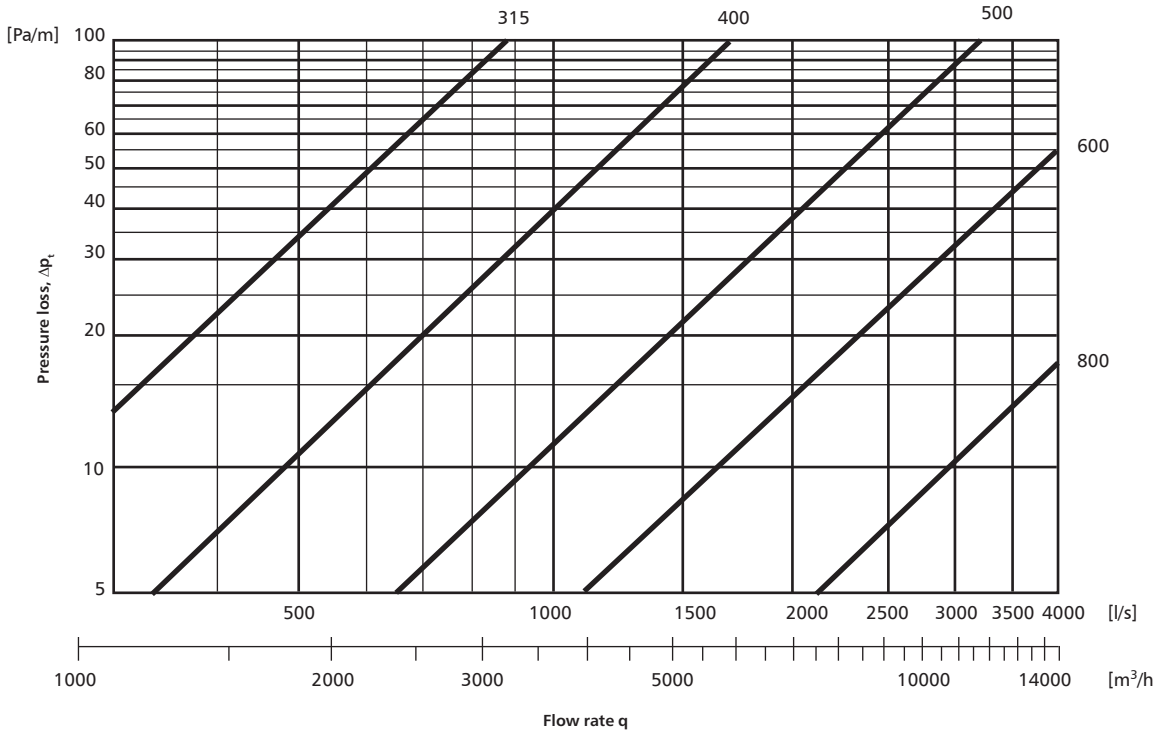

ALNOR® ventilation systems
is a registered trademark protected by a technical patent. All modification rights reserved.

Round silencers

SIBROL

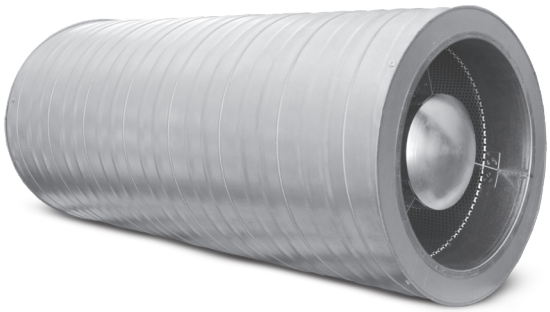

Description

The silencers are delivered with the SPIRAL® system seals in the standard version. The diameter sizes d_1 > 315 mm require ordering the NSL male couplings which need to be installed in the silencer before connecting the silencer to the ductwork. The male fittings are available separately. They are not delivered with the silencers. Rock wool thickness inside the silencer:
100 mm for SIBROL-10 - depends on the outer cladding size.
150 mm for SIBROL-15 - depends on the outer cladding size.

Insulation:
Insulation material: rock wool.
Insulation type: trimmed from reel, flexible.

Available materials - Product code examples
SIBROL-...-...-... - galvanized steel sheet

SIBROL-K-...-...-... - 1.4301/304 stainless steel sheet

SIBROL-K-...-...-...-316L - 1.4404/316L stainless steel sheet
Product code examples
Product code: **SIBROL - iii - aaa - bbb**

type
Insulation thickness
Ød$_1$
L

Dimensions

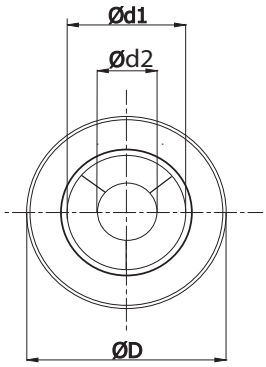

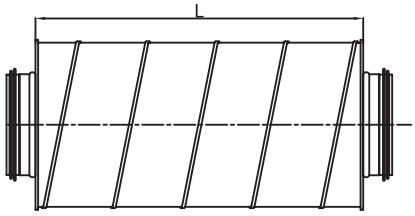

Cross-section for specific types of SIBROL, $d_1 \leq 315$ mm.

Not applicable to the diameter sizes: D-100, D-125, D-160, D-200, D-250 with 50 mm thick insulation.

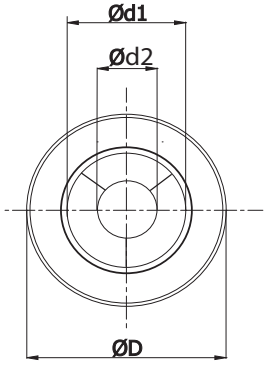

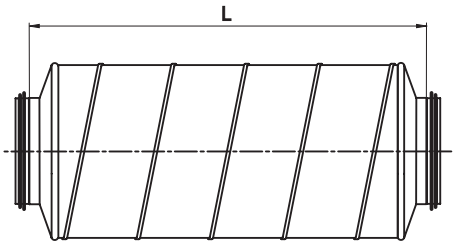

Cross-section of SIBROL with 50 mm thick insulation; designed for the diameter sizes: D-100, D-125, D-160, D-200, D-250.

The silencers are fabricated with press-formed covers.

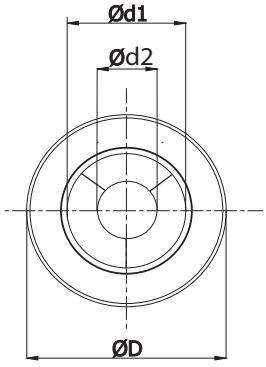

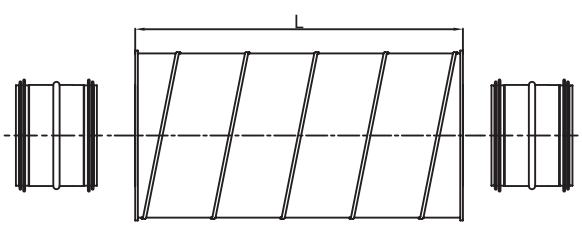

Cross-section for specific types of SIBROL, $d_1 > 315$ mm.

ALNOR® ventilation systems
is a registered trademark protected by a technical patent. All modification rights reserved.

Dimensions

SIBROL-50 - 50 mm insulation

Description	Ød$_1$ (mm)	D (mm)	Ød$_2$ (mm)	L (mm)	Weight (kg)
SIBROL-50-200-300*	200	300	100	350	3.03
SIBROL-50-200-600*	200	300	100	650	5.80
SIBROL-50-200-900*	200	300	100	950	8.57
SIBROL-50-200-1200*	200	300	100	1250	11.33
SIBROL-50-224-300	224	315	112	300	3.82
SIBROL-50-224-600	224	315	112	600	7.31
SIBROL-50-224-900	224	315	112	900	10.79
SIBROL-50-224-1200	224	315	112	1200	14.28
SIBROL-50-250-300*	250	355	125	350	4.05
SIBROL-50-250-600*	250	355	125	650	7.72
SIBROL-50-250-900*	250	355	125	950	11.40
SIBROL-50-250-1200*	250	355	125	1250	15.07
SIBROL-50-280-300	280	400	140	300	4.62
SIBROL-50-280-600	280	400	140	600	8.80
SIBROL-50-280-900	280	400	140	900	12.98
SIBROL-50-280-1200	280	400	140	1200	17.15
SIBROL-50-300-300	300	400	150	300	4.81
SIBROL-50-300-600	300	400	150	600	9.13
SIBROL-50-300-900	300	400	150	900	13.45
SIBROL-50-300-1200	300	400	150	1200	17.77
SIBROL-50-315-300	315	400	150	300	5.14
SIBROL-50-315-600	315	400	150	600	9.79
SIBROL-50-315-900	315	400	150	900	14.44
SIBROL-50-315-1200	315	400	150	1200	19.09
SIBROL-50-355-300	355	400	180	300	5.77
SIBROL-50-355-600	355	450	180	600	10.91
SIBROL-50-355-900	355	450	180	900	16.04
SIBROL-50-355-1200	355	450	180	1200	21.18
SIBROL-50-400-300	400	500	200	300	6.18
SIBROL-50-400-600	400	500	200	600	11.61
SIBROL-50-400-900	400	500	200	900	17.05
SIBROL-50-400-1200	400	500	200	1200	22.48
SIBROL-50-450-300	450	560	225	300	8.04
SIBROL-50-450-600	450	560	225	600	15.16
SIBROL-50-450-900	450	560	225	900	22.28
SIBROL-50-450-1200	450	560	225	1200	29.40
SIBROL-50-500-300	500	600	250	300	8.99
SIBROL-50-500-600	500	600	250	600	16.90
SIBROL-50-500-900	500	600	250	900	24.82
SIBROL-50-500-1200	500	600	250	1200	32.73
SIBROL-50-560-300	560	630	280	300	10.07
SIBROL-50-560-600	560	630	280	600	18.85
SIBROL-50-560-900	560	630	280	900	27.62
SIBROL-50-560-1200	560	630	280	1200	36.40

Description	Ød$_1$ (mm)	D (mm)	Ød$_2$ (mm)	L (mm)	Weight (kg)
SIBROL-50-600-300	600	710	300	300	10.61
SIBROL-50-600-600	600	710	300	600	19.76
SIBROL-50-600-900	600	710	300	900	28.92
SIBROL-50-600-1200	600	710	300	1200	38.07
SIBROL-50-630-300	630	710	315	300	11.53
SIBROL-50-630-600	630	710	315	600	21.50
SIBROL-50-630-900	630	710	315	900	31.47
SIBROL-50-630-1200	630	710	315	1200	41.44
SIBROL-50-710-300	710	800	355	300	14.91
SIBROL-50-710-600	710	800	355	600	27.63
SIBROL-50-710-900	710	800	355	900	40.36
SIBROL-50-710-1200	710	800	355	1200	53.09
SIBROL-50-800-300	800	900	355	300	16.02
SIBROL-50-800-600	800	900	355	600	29.40
SIBROL-50-800-900	800	900	355	900	42.78
SIBROL-50-800-1200	800	900	355	1200	56.16
SIBROL-50-900-300	900	1000	450	300	18.65
SIBROL-50-900-600	900	1000	450	600	33.16
SIBROL-50-900-900	900	1000	450	900	47.67
SIBROL-50-900-1200	900	1000	450	1200	62.19
SIBROL-50-1000-300	1000	1120	500	300	21.79
SIBROL-50-1000-600	1000	1120	500	600	38.35
SIBROL-50-1000-900	1000	1120	500	900	53.85
SIBROL-50-1000-1200	1000	1120	500	1200	71.46

*press-formed covers

ALNOR® ventilation systems
is a registered trademark protected by a technical patent. All modification rights reserved.

Round silencers

SIBROL

Dimensions

SIBROL-100 - 100 mm insulation

Description	Ød$_1$ (mm)	D (mm)	Ød$_2$ (mm)	L (mm)	Weight (kg)
SIBROL-100-200-300	200	400	100	300	4.49
SIBROL-100-200-600	200	400	100	600	8.46
SIBROL-100-200-900	200	400	100	900	12.42
SIBROL-100-200-1200	200	400	100	1200	16.39
SIBROL-100-224-300	224	450	112	300	5.11
SIBROL-100-224-600	224	450	112	600	9.56
SIBROL-100-224-900	224	450	112	900	14.02
SIBROL-100-224-1200	224	450	112	1200	18.47
SIBROL-100-250-300	250	450	125	300	5.44
SIBROL-100-250-600	250	450	125	600	10.13
SIBROL-100-250-900	250	450	125	900	14.83
SIBROL-100-250-1200	250	450	125	1200	19.52
SIBROL-100-280-300	280	500	140	300	6.12
SIBROL-100-280-600	280	500	140	600	11.36
SIBROL-100-280-900	280	500	140	900	16.60
SIBROL-100-280-1200	280	500	140	1200	21.83
SIBROL-100-300-300	300	500	150	300	6.39
SIBROL-100-300-600	300	500	150	600	11.81
SIBROL-100-300-900	300	500	150	900	17.24
SIBROL-100-300-1200	300	500	150	1200	22.66
SIBROL-100-315-300	315	500	150	300	7.24
SIBROL-100-315-600	315	500	150	600	13.52
SIBROL-100-315-900	315	500	150	900	19.80
SIBROL-100-315-1200	315	500	150	1200	26.07
SIBROL-100-355-300	355	560	180	300	7.96
SIBROL-100-355-600	355	560	180	600	14.65
SIBROL-100-355-900	355	560	180	900	21.34
SIBROL-100-355-1200	355	560	180	1200	28.03
SIBROL-100-400-300	400	600	200	300	8.81
SIBROL-100-400-600	400	600	200	600	16.13
SIBROL-100-400-900	400	600	200	900	23.45
SIBROL-100-400-1200	400	600	200	1200	30.76
SIBROL-100-450-300	450	630	225	300	10.31
SIBROL-100-450-600	450	630	225	600	18.77
SIBROL-100-450-900	450	630	225	900	27.23
SIBROL-100-450-1200	450	630	225	1200	35.69
SIBROL-100-500-300	500	710	250	300	11.03
SIBROL-100-500-600	500	710	250	600	19.89
SIBROL-100-500-900	500	710	250	900	28.76
SIBROL-100-500-1200	500	710	250	1200	37.63
SIBROL-100-560-300	560	800	280	300	12.77
SIBROL-100-560-600	560	800	280	600	22.95
SIBROL-100-560-900	560	800	280	900	33.12
SIBROL-100-560-1200	560	800	280	1200	43.30

Description	Ød$_1$ (mm)	D (mm)	Ød$_2$ (mm)	L (mm)	Weight (kg)
SIBROL-100-600-300	600	800	300	300	13.54
SIBROL-100-600-600	600	800	300	600	24.18
SIBROL-100-600-900	600	800	300	900	34.82
SIBROL-100-600-1200	600	800	300	1200	45.46
SIBROL-100-630-300	630	800	315	300	14.05
SIBROL-100-630-600	630	800	315	600	24.97
SIBROL-100-630-900	630	800	315	900	35.89
SIBROL-100-630-1200	630	800	315	1200	46.82
SIBROL-100-710-300	710	900	355	300	16.50
SIBROL-100-710-600	710	900	355	600	28.64
SIBROL-100-710-900	710	900	355	900	40.78
SIBROL-100-710-1200	710	900	355	1200	52.92
SIBROL-100-800-300	800	1000	355	300	18.90
SIBROL-100-800-600	800	1000	355	600	32.52
SIBROL-100-800-900	800	1000	355	900	46.15
SIBROL-100-800-1200	800	1000	355	1200	59.77
SIBROL-100-900-300	900	1120	450	300	23.57
SIBROL-100-900-600	900	1120	450	600	38.86
SIBROL-100-900-900	900	1120	450	900	54.15
SIBROL-100-900-1200	900	1120	450	1200	69.45
SIBROL-100-1000-300	1000	1250	500	300	27.33
SIBROL-100-1000-600	1000	1250	500	600	44.19
SIBROL-100-1000-900	1000	1250	500	900	58.94
SIBROL-100-1000-1200	1000	1250	500	1200	77.91

ALNOR® ventilation systems
is a registered trademark protected by a technical patent. All modification rights reserved.

Round silencers

SIL-GL/SI-GL



Description

The SI-GL silencers are not provided with gaskets.
The SIL-GL silencers are delivered with the SPIRAL® system seals.
The SIL-GL and SI-GL silencers have permanently fixed covers, which are not removable. Glass wool thickness inside the silencer:
25 mm for SIL-GL-25 / SI-GL-25 - depends on the outer cladding size.
50 mm for SIL-GL-50 / SI-GL-50 - depends on the outer cladding size.
100 mm for SIL-GL-100 / SI-GL-100 - depends on the outer cladding size.

Insulation:
Insulation material: glass wool.
Insulation type: trimmed from reel, flexible.

Available materials - Product code examples

SIL-GL-...-...-...	- galvanized steel sheet
SIL-GL-K-...-...-...	- 1.4301/304 stainless steel sheet
SIL-GL-K-...-...-...-316L	- 1.4404/316L stainless steel sheet
SIL-GL-A-...-...-...	- aluminium sheet
SIL-GL-CU-...-...-...	- copper sheet

Product code examples
Product code: **SIL-GL - iii - aaa - bbb**

type
Insulation thickness
Ød$_1$
L

Dimensions

SIL-GL

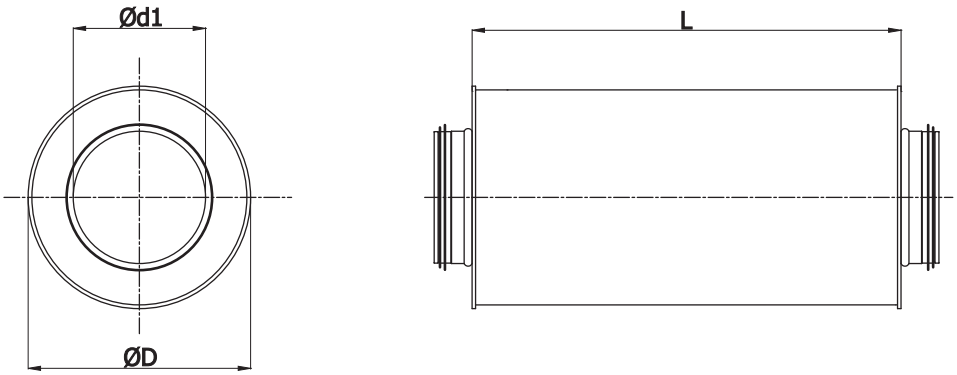

SI-GL

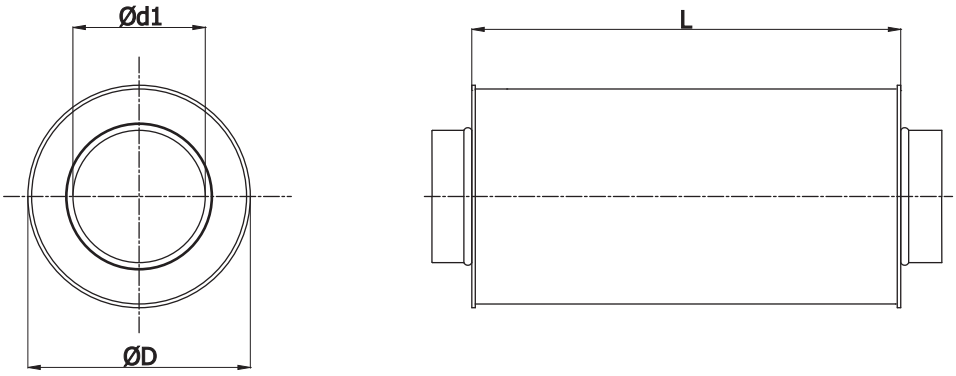

ALNOR® ventilation systems
is a registered trademark protected by a technical patent. All modification rights reserved.

Round silencers

SIL-GL/SI-GL

Dimensions

SIL-GL-50 / SI-GL-50 - 50 mm insulation

Description	$Ød_{1\ nom}$ (mm)	D_{nom} (mm)	L (mm)	Sound insulation (dB) at frequency (Hz) 125	250	500	1000	2000	4000	8000	Weight (kg)
SIL-GL 080-300	80	180	300	6	15	29	45	50	26	28	2
080-500	80	180	500	9	18	32	48	53	29	31	3
080-600	80	180	600	11	19	33	49	54	30	32	3
080-900	80	180	900	13	22	36	52	57	33	35	5
080-1000	80	180	1000	14	23	37	53	58	34	36	6
SIL-GL 100-300	100	200	300	5	13	26	41	44	22	24	2
100-500	100	200	500	8	16	29	44	47	26	27	3
100-600	100	200	600	9	17	30	45	49	27	29	3
100-900	100	200	900	12	19	32	48	51	29	31	5
100-1000	100	200	1000	13	21	34	49	52	30	32	6
SIL-GL 125-300	125	224	300	4	11	22	37	41	19	21	3
125-500	125	224	500	7	14	26	40	44	22	24	4
125-600	125	224	600	8	15	27	41	45	24	25	4
125-900	125	224	900	11	18	29	44	47	26	28	7
125-1000	125	224	1000	12	19	31	45	49	27	29	7
SIL-GL 160-300	160	250	300	3	9	20	33	35	16	18	3
160-500	160	250	500	6	12	23	36	38	19	21	5
160-600	160	250	600	7	14	24	37	39	21	22	6
160-900	160	250	900	10	16	26	40	42	23	25	8
160-1000	160	250	1000	11	17	28	41	43	24	26	8
SIL-GL 200-300	200	315	300	2	7	16	31	31	15	16	4
200-500	200	315	500	5	10	19	34	34	18	19	6
200-600	200	315	600	6	11	20	35	35	19	20	7
200-900	200	315	900	8	13	23	38	38	22	23	10
200-1000	200	315	1000	9	15	24	39	39	23	24	11
SIL-GL 250-500	250	355	500	4	9	18	29	27	15	16	9
250-600	250	355	600	5	11	19	30	28	16	18	11
250-900	250	355	900	8	13	22	33	31	19	20	14
250-1000	250	355	1000	9	14	23	33	32	20	21	12
SIL-GL 315-500	315	400	500	4	7	14	23	21	13	14	11
315-600	315	400	600	5	8	16	25	19	14	15	12
315-900	315	400	900	7	11	18	28	21	17	18	16
315-1000	315	400	1000	8	12	19	28	22	18	19	16

ALNOR® ventilation systems
is a registered trademark protected by a technical patent. All modification rights reserved.

Silencers
SQLL-25

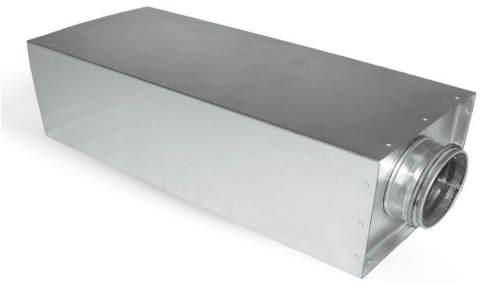

Dimensions

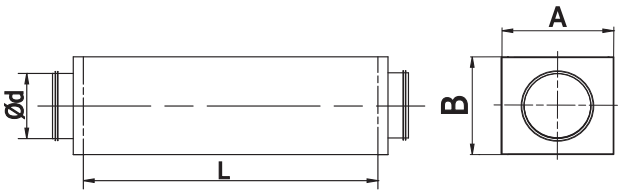

Ød1 (mm)	A (mm)	B (mm)	L (mm)	Sound insulation (dB) at frequency (Hz) 125	250	500	1000	2000	4000	8000	Weight (kg)
100	150	150	600	4	4	12	20	25	21	13	3.2
100	150	150	900	7	6	18	31	37	32	19	4.6
100	150	150	1200	9	8	24	41	49	43	25	5.9
125	175	175	600	4	4	12	20	24	20	12	3.6
125	175	175	900	6	6	18	30	35	31	18	5.1
125	175	175	1200	8	8	24	40	47	41	24	6.6
160	210	210	600	4	4	11	19	21	19	11	4.6
160	210	210	900	6	6	17	28	32	28	17	6.4
160	210	210	1200	8	7	23	38	43	37	22	8.2
200	250	250	600	3	4	11	18	18	16	10	5.9
200	250	250	900	5	5	16	26	28	24	15	8.3
200	250	250	1200	7	7	21	35	37	32	19	10.7
250	300	300	600	2	3	10	16	15	12	8	7.3
250	300	300	900	4	5	14	23	23	18	11	10.0
250	300	300	1200	5	6	19	31	31	24	15	12.7
315	365	365	600	1	3	8	12	12	8	4	9.2
315	365	365	900	2	5	12	18	18	12	6	10.8
315	365	365	1200	2	6	16	24	24	16	8	12.4
400	450	450	600	–	–	–	–	–	–	–	11.4
400	450	450	900	10	15	25	35	31	24	22	15.5
400	450	450	1200	12	17	29	43	39	27	25	19.5
450	500	500	600	–	–	–	–	–	–	–	13.5
450	500	500	900	10	13	23	33	30	23	21	19.5
450	500	500	1200	11	16	27	41	37	35	24	22.5
500	550	550	600	–	–	–	–	–	–	–	14.0
500	550	550	900	9	13	23	32	28	22	20	19.8
500	550	550	1200	10	16	27	40	35	25	23	24.7
630	680	680	600	–	–	–	–	–	–	–	30.5
630	680	680	900	7	10	19	28	22	19	16	37.5
630	680	680	1200	9	13	23	36	30	21	19	46.5

Description

The SQLL silencers are made of a square duct for the outer cladding with an inner cladding of perforated sheet. The clearance between the outer and inner cladding is filled with 25 mm thick sound-proofing mineral wool.
The silencers of 400 mm in size and larger are made with a 50 mm thick sound-proofing baffle.

Insulation:
Insulation material: glass wool.
Insulation type: trimmed from reel, flexible.

Available materials - Product code examples
SQLL-25-...-... - galvanized steel sheet
SQLL-25-K-...-... - 1.4301/304 stainless steel sheet
SQLL-25-K-...-...-316L - 1.4404/316L stainless steel sheet
SQLL-25-...-... - aluminium sheet
SQLL-25-CU-...-... - copper sheet

Product code examples
Product code: **SQLL - 25 - aaa - bbb**

type
Insulation thickness
Ød
L

ALNOR® ventilation systems
is a registered trademark protected by a technical patent. All modification rights reserved.

Silencers

SQLL-25

Pressure drop

Description	Pressure loss (Pa) at air flow velocity (m/s)				
	2	4	8	10	12
SQLL-25-100-600	0.10	0.38	1.54	2.40	3.46
SQLL-25-100-900	0.12	0.48	1.92	3.00	4.32
SQLL-25-100-1200	0.17	0.67	2.69	4.20	6.05
SQLL-25-125-600	0.08	0.32	1.28	2.00	2.88
SQLL-25-125-900	0.12	0.48	1.92	3.00	4.32
SQLL-25-125-1200	0.17	0.67	2.69	4.20	6.05
SQLL-25-160-600	0.07	0.28	1.12	1.75	2.51
SQLL-25-160-900	0.10	0.38	1.54	2.40	3.46
SQLL-25-160-1200	0.14	0.58	2.30	3.60	5.18
SQLL-25-200-600	0.05	0.22	0.88	1.37	1.98
SQLL-25-200-900	0.07	0.29	1.15	1.80	2.59
SQLL-25-200-1200	0.12	0.48	1.92	3.00	4.32
SQLL-25-250-600	0.03	0.13	0.51	0.80	1.15
SQLL-25-250-900	0.05	0.19	0.77	1.20	1.73
SQLL-25-250-1200	0.07	0.29	1.15	1.80	2.59
SQLL-25-315-600	0.02	0.10	0.38	0.60	0.86
SQLL-25-315-900	0.04	0.14	0.58	0.90	1.30
SQLL-25-315-1200	0.05	0.19	0.77	1.20	1.73
SQLL-25-400-900	0.86	3.46	13.82	21.60	31.10
SQLL-25-450-900	0.22	0.89	3.57	5.58	8.04
SQLL-25-500-900	1.13	4.51	18.05	28.20	40.61
SQLL-25-630-900	0.60	2.40	9.60	15.00	21.60
SQLL-25-400-1200	0.24	0.94	3.76	5.88	8.47
SQLL-25-450-1200	0.23	0.91	3.65	5.70	8.21
SQLL-25-500-1200	0.22	0.89	3.57	5.58	8.04
SQLL-25-630-1200	0.20	0.82	3.26	5.10	7.34

ALNOR® ventilation systems
is a registered trademark protected by a technical patent. All modification rights reserved.

Silencers
SQLL-50

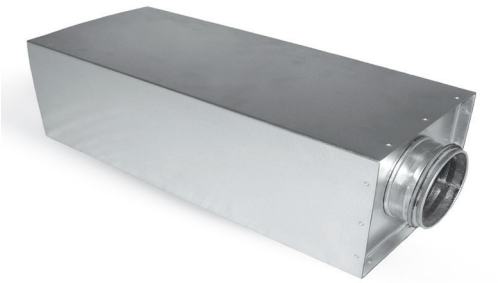

Description

The SQLL silencers are made of a square duct for the outer cladding with an inner cladding of perforated sheet. The clearance between the outer and inner cladding is filled with 50 mm thick sound-proofing mineral wool.
The silencers of 400 mm in size and larger are made with a 50 mm thick sound-proofing baffle.

Insulation:
Insulation material: glass wool.
Insulation type: trimmed from reel, flexible.

Available materials - Product code examples

SQLL-50-...-...	- galvanized steel sheet
SQLL-50-K-...-...	- 1.4301/304 stainless steel sheet
SQLL-50-K-...-...-316L	- 1.4404/316L stainless steel sheet
SQLL-50-...-...	- aluminium sheet
SQLL-50-CU-...-...	- copper sheet

Product code examples

Product code: **SQLL - 50 - aaa - bbb**

type
Insulation
Ød
L

Dimensions

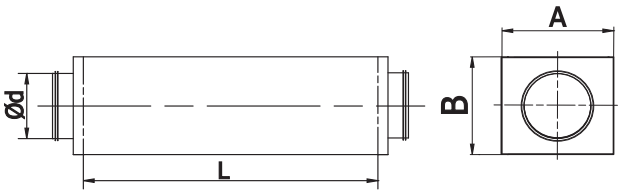

Ød1 (mm)	A (mm)	B (mm)	L (mm)	Weight (kg)
100	210	160	300	1.95
100	210	160	500	2.55
100	210	160	600	2.95
100	210	160	900	4.15
100	210	160	1000	4.55
125	240	180	300	2.10
125	240	180	500	2.95
125	240	180	600	3.55
125	240	180	900	4.45
125	240	180	1000	5.15
160	270	220	300	2.42
160	270	220	500	3.70
160	270	220	600	4.20
160	270	220	900	5.80
160	270	220	1000	6.40
200	330	250	300	3.50
200	330	250	500	4.60
200	330	250	600	5.80
200	330	250	900	7.90
200	330	250	1000	8.90
250	380	310	300	3.80
250	380	310	500	5.40
250	380	310	600	6.30
250	380	310	900	8.80
250	380	310	1000	9.40
315	450	370	300	4.90
315	450	370	500	6.90
315	450	370	600	8.00
315	450	370	900	10.90
315	450	370	1000	13.50

ALNOR® ventilation systems
is a registered trademark protected by a technical patent. All modification rights reserved.

Silencers

SQLL-50

Dimensions

Ød$_1$ (mm)	A (mm)	B (mm)	L (mm)	Weight (kg)
400	530	460	300	6.50
400	530	460	500	8.50
400	530	460	600	12.00
400	530	460	900	14.50
400	530	460	1000	15.00
450	580	510	300	9.50
450	580	510	500	11.00
450	580	510	600	15.50
450	580	510	900	18.00
450	580	510	1000	20.00
500	630	560	300	8.50
500	630	560	500	12.00
500	630	560	600	16.00
500	630	560	900	20.00
500	630	560	1000	23.00
630	760	690	300	16.00
630	760	690	500	17.50
630	760	690	600	19.50
630	760	690	900	26.00
630	760	690	1000	29.00

ALNOR® ventilation systems
is a registered trademark protected by a technical patent. All modification rights reserved.

SQLL-CR/SQLL-CRQ

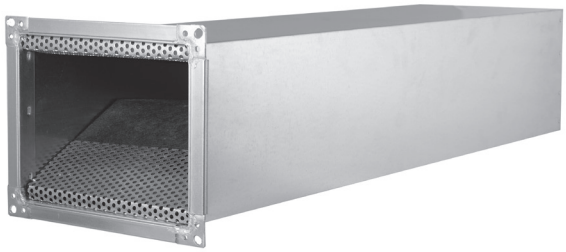

Description

The SQLL-CR silencer for the spiral duct system provides an extremely good insulation of all noise types in ventilation systems operated in industrial, office, or single-family buildings. The silencer housing is square-shaped and available in two different sizes fitted with a round port, which has a factory-installed EPDM gasket to achieve air tightness class D. The sound insulation layer is made of mineral wool with lining and covered with a ridged inner cladding to increase the sound-insulating surface area.

Note:
SQLL-CR - round intake and outlet
SQLL-CRQ - PQ angle frame intake and round outlet

Insulation:
Insulation material: glass wool + lining
Insulation type: rigid panel with lining

Available materials - Product code examples

SQLL-CR-...-...	- galvanized steel sheet
SQLL-CR-K-...-...	- 1.4301/304 stainless steel sheet
SQLL-CR-K-...-...-316L	- 1.4404/316L stainless steel sheet
SQLL-CR-...-...	- aluminium sheet
SQLL-CR-CU-...-...	- copper sheet

Product code examples
Product code: **SQLL-CR - aaa - bbb**

type
Ød
L

Dimensions

SQLL-CR

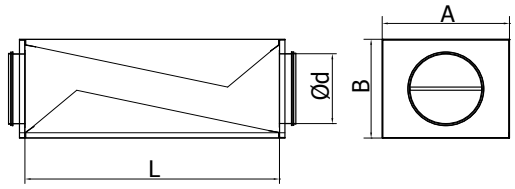

SQLL-CRQ

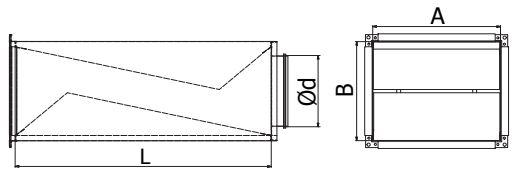

Description	Ød1 (mm)	A (mm)	B (mm)	L (mm)
SQLL-CR-080-500	80	280	200	500
SQLL-CR-080-700	80	280	200	700
SQLL-CR-080-900	80	280	200	900
SQLL-CR-080-1200	80	280	200	1200
SQLL-CR-100-500	100	280	200	500
SQLL-CR-100-700	100	280	200	700
SQLL-CR-100-900	100	280	200	900
SQLL-CR-100-1200	100	280	200	1200
SQLL-CR-125-500	125	280	200	500
SQLL-CR-125-700	125	280	200	700
SQLL-CR-125-900	125	280	200	900
SQLL-CR-125-1200	125	280	200	1200
SQLL-CR-150-500	150	280	200	500
SQLL-CR-150-700	150	280	200	700
SQLL-CR-150-900	150	280	200	900
SQLL-CR-150-1200	150	280	200	1200
SQLL-CR-160-500	160	280	200	500
SQLL-CR-160-700	160	280	200	700
SQLL-CR-160-900	160	280	200	900
SQLL-CR-160-1200	160	280	200	1200
SQLL-CR-180-500	180	280	200	500
SQLL-CR-180-700	180	280	200	700
SQLL-CR-180-900	180	280	200	900
SQLL-CR-180-1200	180	280	200	1200
SQLL-CR-200-500	200	350	280	500
SQLL-CR-200-700	200	350	280	700
SQLL-CR-200-900	200	350	280	900
SQLL-CR-200-1200	200	350	280	1200
SQLL-CR-250-500	250	350	280	500
SQLL-CR-250-700	250	350	280	700
SQLL-CR-250-900	250	350	280	900
SQLL-CR-250-1200	250	350	280	1200

ALNOR® ventilation systems
is a registered trademark protected by a technical patent. All modification rights reserved.

Silencers

SQLL-CR/SQLL-CRQ

Sound insulation

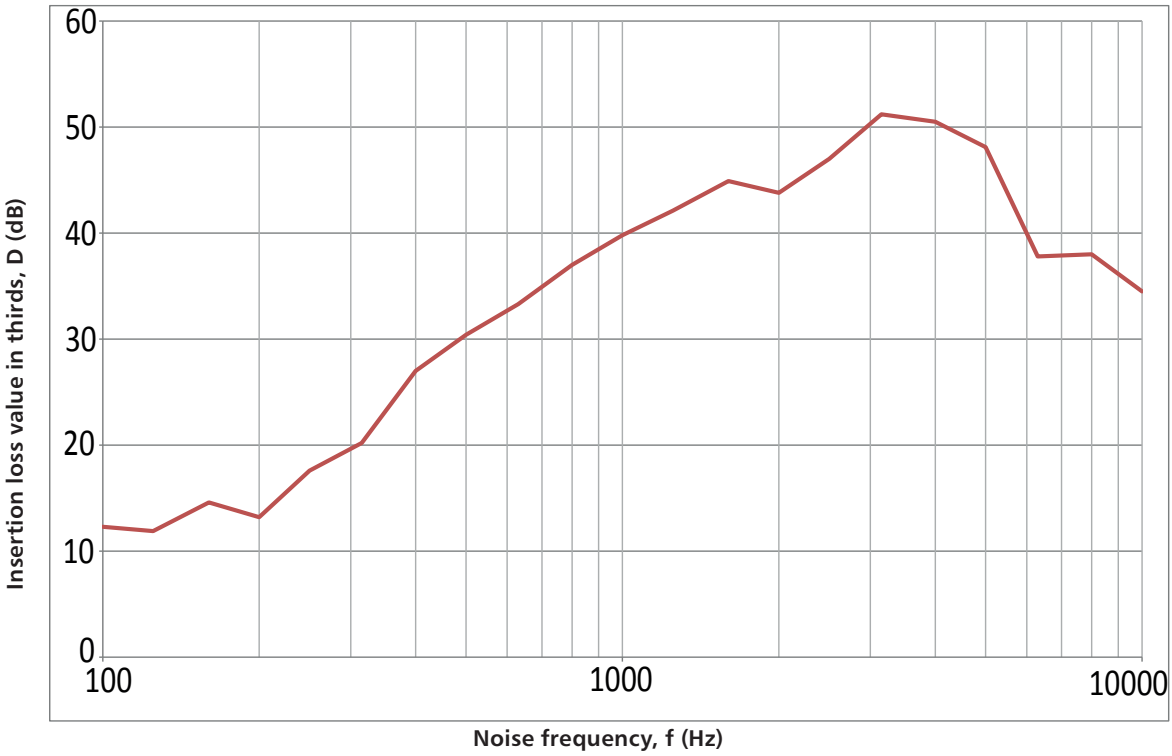

	540 m3/h	770 m3/h	860 m3/h	920 m3/h
f (Hz)	D (dB)	D (dB)	D (dB)	D (dB)
100	11.9	12.3	10.8	10.9
125	11.8	11.9	11.8	11.8
160	14.6	14.6	14.7	14.3
200	13.1	13.2	13.2	13.4
250	17.5	17.6	17.3	17.6
315	20.2	20.2	20	20.2
400	27	27	26.9	26.8
500	30.4	30.4	29.9	30
630	33.3	33.3	33.1	33.2
800	37.3	37	36.7	36.9
1000	40	39.8	39.5	39.5
1250	42.2	42.1	42	42.1
1600	44.8	44.9	44.8	45.2
2000	43.4	43.8	43.8	43.3
2500	46.7	47	47	47
3150	51.2	51.2	51.2	51.3
4000	50.5	50.5	50.3	50.4
5000	47.9	48.1	48	48.2
6300	37.7	37.8	37.4	37.5
8000	37.7	38	37.8	37.8
10000	34.3	34.5	34.4	34.6

ALNOR® ventilation systems
is a registered trademark protected by a technical patent. All modification rights reserved.

Silencers

SQQL-30

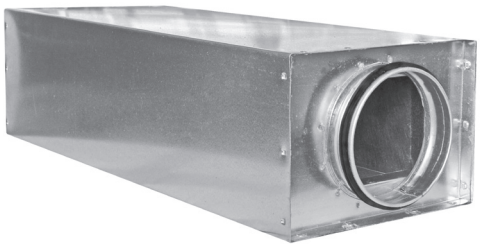

Description

The SQQL-30 silencers are made of a square duct for the outer cladding. The clearance between the outer and inner cladding is filled with 30 mm thick sound-proofing mineral wool.

Insulation:
Insulation material: glass wool.
Insulation type: rigid panel with lining

Available materials - Product code examples

SQQL-30-...-...	- galvanized steel sheet
SQQL-30-K-...-...	- 1.4301/304 stainless steel sheet
SQQL-30-K-...-...-316L	- 1.4404/316L stainless steel sheet
SQQL-30-A-...-...	- aluminium sheet
SQQL-30-CU-...-...	- copper sheet

Product code examples

Product code: **SQQL-30 - aaa - bbb**

type
Ød
L

Dimensions

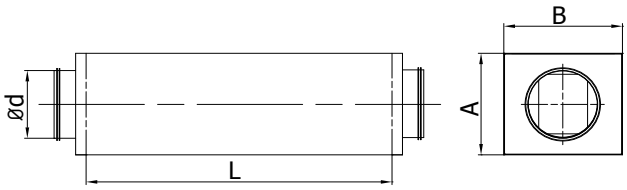

$Ød_{nom}$ (mm)	A (mm)	B (mm)	L (mm)	Weight (kg)
100	150	150	600	3.2
100	150	150	900	4.6
100	150	150	1200	5.9
125	175	175	600	3.6
125	175	175	900	5.1
125	175	175	1200	6.6
160	210	210	600	4.6
160	210	210	900	6.4
160	210	210	1200	8.2
200	250	250	600	5.9
200	250	250	900	8.3
200	250	250	1200	10.7
250	300	300	600	7.3
250	300	300	900	10.0
250	300	300	1200	12.7
315	365	365	600	9.2
315	365	365	900	10.8
315	365	365	1200	12.4
400	450	450	600	11.4
400	450	450	900	15.5
400	450	450	1200	19.5
450	500	500	600	13.5
450	500	500	900	19.5
450	500	500	1200	22.5
500	550	550	600	14.0
500	550	550	900	19.8
500	550	550	1200	24.7
630	680	680	600	30.5
630	680	680	900	46.5
630	680	680	1200	37.5

ALNOR® ventilation systems
is a registered trademark protected by a technical patent. All modification rights reserved.

Silencers
SQQL-30

Ød$_{nom}$ (mm)	A (mm)	B (mm)	L (mm)	Weight (kg)
250	300	300	300	4.18
250	300	300	500	6.39
250	300	300	600	7.30
250	300	300	900	10.00
250	300	300	1000	11.01
250	300	300	1200	12.70
250	300	300	1500	15.56
315	365	365	300	5.26
315	365	365	500	8.05
315	365	365	600	9.20
315	365	365	900	10.80
315	365	365	1000	10.75
315	365	365	1200	12.40
315	365	365	1500	15.19
400	450	450	300	6.52
400	450	450	500	9.98
400	450	450	600	11.40
400	450	450	900	15.50
400	450	450	1000	16.90
400	450	450	1200	19.50
400	450	450	1500	23.89
450	500	500	300	7.73
450	500	500	500	11.81
450	500	500	600	13.50
450	500	500	900	19.50
450	500	500	1000	19.50
450	500	500	1200	22.50
450	500	500	1500	27.56
500	550	550	300	8.01
500	550	550	500	12.25
500	550	550	600	14.00
500	550	550	900	19.80
500	550	550	1000	21.41
500	550	550	1200	24.70
500	550	550	1500	30.26
630	680	680	300	17.45
630	680	680	500	26.69
630	680	680	600	30.50
630	680	680	900	46.50
630	680	680	1000	32.50
630	680	680	1200	37.50
630	680	680	1500	45.94

Technical specifications

Pressure loss (Pa)

Ød$_{nom}$ (mm)	L (mm)	2 m/s	4 m/s	8 m/s	10 m/s	12 m/s
100	300	0.4	1.5	6.2	9.6	13.9
100	500	0.4	1.7	6.9	10.7	15.5
100	600	0.4	1.7	7.0	10.9	15.7
100	900	0.5	1.9	7.7	12.0	17.3
100	1000	0.55	2.2	8.8	13.75	19.85
100	1200	0.6	2.5	9.9	15.5	22.4
100	1500	0.8	3.0	12.0	18.8	27.0
125	300	0.3	1.3	5	7.8	11.3
125	500	0.3	1.4	5.6	8.7	12.5
125	600	0.4	1.4	5.7	8.9	12.9
125	900	0.4	1.6	6.4	10.0	14.4
125	1000	0.5	2	8	12.5	18
125	1200	0.6	2.4	9.6	15.0	21.6
125	1500	0.7	2.9	11.6	18.1	26.1
160	300	0.3	1.1	4.2	6.6	9.5
160	500	0.3	1.2	4.7	7.4	10.6
160	600	0.3	1.2	4.8	7.6	10.9
160	900	0.3	1.4	5.5	8.6	12.4
160	1000	0.4	1.65	6.65	10.35	14.95
160	1200	0.5	1.9	7.8	12.1	17.5
160	1500	0.6	2.3	9.4	14.6	21.1
200	300	0.2	0.7	3	4.6	6.7
200	500	0.2	0.8	3.3	5.2	7.4
200	600	0.2	0.9	3.4	5.3	7.7
200	900	0.3	1.0	4.1	6.4	9.2
200	1000	0.35	1.3	5.25	8.2	11.8
200	1200	0.4	1.6	6.4	10.0	14.4
200	1500	0.5	1.9	7.7	12.1	17.4
250	300	0.2	0.8	3.2	4.9	7.1
250	500	0.2	0.9	3.5	5.5	7.9
250	600	0.2	0.9	3.6	5.7	8.2
250	900	0.3	1.1	4.3	6.8	9.8
250	1000	0.35	1.4	5.45	8.6	12.35
250	1200	0.4	1.7	6.6	10.4	14.9
250	1500	0.5	1.9	7.5	11.8	16.9
315	300	0.1	0.5	2.1	3.3	4.8
315	500	0.1	0.6	2.4	3.7	5.4
315	600	0.2	0.6	2.5	3.9	5.6
315	900	0.2	0.8	3.2	5.0	7.2
315	1000	0.25	1.1	4.35	6.8	9.8
315	1200	0.3	1.4	5.5	8.6	12.4
315	1500	0.4	1.7	6.6	10.4	14.9

ALNOR® ventilation systems
is a registered trademark protected by a technical patent. All modification rights reserved.

Silencers
SQQL-30

Ød nom (mm)	L (mm)	2 m/s	4 m/s	8 m/s	10 m/s	12 m/s
400	300	0.1	0.4	1.5	2.4	3.5
400	500	0.1	0.4	1.7	2.7	3.9
400	600	0.1	0.4	1.8	2.8	4.0
400	900	0.2	0.6	2.5	3.8	5.5
400	1000	0.25	0.9	3.65	5.6	8.1
400	1200	0.3	1.2	4.8	7.4	10.7
400	1500	0.4	1.6	6.2	9.7	14.0
450	300	0.1	0.3	1.4	2.2	3.1
450	500	0.1	0.4	1.5	2.4	3.5
450	600	0.1	0.4	1.6	2.5	3.6
450	900	0.1	0.6	2.3	3.6	5.2
450	1000	0.2	0.85	3.45	5.35	7.75
450	1200	0.3	1.1	4.6	7.1	10.3
450	1500	0.4	1.5	6.0	9.3	13.4

Ød nom (mm)	L (mm)	2 m/s	4 m/s	8 m/s	10 m/s	12 m/s
500	300	0.1	0.3	1.2	1.9	2.7
500	500	0.1	0.3	1.3	2.0	2.9
500	600	0.1	0.3	1.4	2.2	3.1
500	900	0.1	0.5	2.1	3.2	4.7
500	1000	0.2	0.8	3.2	5	7.25
500	1200	0.3	1.1	4.3	6.8	9.8
500	1500	0.4	1.4	5.8	9.0	13.0
630	300	0.1	0.3	1.2	1.8	2.6
630	500	0.1	0.3	1.3	2.0	2.9
630	600	0.1	0.3	1.3	2.1	3.0
630	900	0.1	0.4	1.7	2.6	3.8
630	1000	0.15	0.7	2.85	4.4	6.4
630	1200	0.2	1.0	4.0	6.2	9.0
630	1500	0.3	1.2	4.8	7.5	10.8

Sound insulation (dB)

Ød (mm)	L (mm)	63 Hz	125 Hz	250 Hz	500 Hz	1k	2k	4k	8k
100	300	1	4.6	3.6	14	32.6	36.4	21.8	11.4
100	500	4.4	6.7	4.3	15.5	34.8	38.7	24.5	12.7
100	600	5.1	7.6	4.7	16.2	35.8	39.7	25.7	13.3
100	900	12.5	9.5	5.2	17.5	38.1	41.9	28.2	14.5
100	1000	13.05	9.95	5.7	18.3	38.95	43.05	29.5	15.1
100	1200	13.6	10.4	6.2	19.1	39.8	44.2	30.8	15.7
100	1500	15.7	12	6.8	20.5	42.7	47.7	33.8	17
125	300	0.9	4	3.2	12.6	29.7	33.6	19.1	10.1
125	500	3.8	5.8	3.8	13.9	31.7	35.7	21.5	11.2
125	600	4	9	3	13	30	37	24	13
125	900	11.3	8.6	4.7	15.9	34.9	38.8	25.2	13.1
125	1000	12	9.15	4.9	16.2	35.2	39.25	25.7	13.3
125	1200	12.7	9.7	5.1	16.5	35.5	39.7	26.2	13.5
125	1500	14.6	11.2	5.6	17.7	38.1	43	28.8	14.6
160	300	0.8	3.4	2.7	11.1	26.6	29.2	16.5	8.8
160	500	3.3	4.9	3.3	12.2	28.4	31	18.6	9.8
160	600	3.9	5.8	3.6	12.9	29.4	31.9	19.8	10.4
160	900	6.8	5.2	5.4	15.7	34.2	33.8	21	10.4
160	1000	10.2	7.8	5.3	15.8	33.8	35.05	22.9	11.55
160	1200	13.6	10.4	5.2	15.9	33.4	36.3	24.8	12.7
160	1500	15.6	12	5.7	17	35.8	39.2	27.2	13.8

ALNOR® ventilation systems
is a registered trademark protected by a technical patent. All modification rights reserved.

Silencers
SQQL-30

Ød (mm)	L (mm)	63 Hz	125 Hz	250 Hz	500 Hz	1k	2k	4k	8k
200	300	0.6	2.5	2.2	9.4	25.4	26.4	15.6	8
200	500	2.5	3.7	2.7	10.4	27.1	28	17.5	8.9
200	600	3.1	4.7	3	11	28	29	18.6	9.5
200	900	8.6	6.6	3.6	12.3	30.3	31.1	21.1	10.7
200	1000	10.25	7.85	4.1	13.15	31.2	32.25	22.35	11.3
200	1200	11.9	9.1	4.6	14	32.1	33.4	23.6	11.9
200	1500	13.8	10.5	5	15	34.4	36.1	26	12.9
250	300	0.6	2.4	2.1	8.8	21.1	20.8	12.5	6.8
250	500	2.4	3.5	2.5	9.7	22.6	22.1	14.1	7.6
250	600	3	4.4	2.9	10.3	23.5	23.1	15.3	8.1
250	900	8.4	6.4	3.4	11.7	25.8	25.2	17.8	9.3
250	1000	10.05	7.7	3.9	12.5	26.65	26.35	19.1	9.9
250	1200	11.7	9	4.4	13.3	27.5	27.5	20.4	10.5
250	1500	13.2	10.1	4.8	14.1	29	28.8	21.9	11.2
315	300	0.5	2.1	1.6	7	17.3	16.4	11	5.9
315	500	2	3	1.9	7.7	18.5	17.4	12.4	6.6
315	600	2.6	3.9	2.2	8.4	19.5	15.2	13.6	7.2
315	900	7.7	5.9	2.8	9.7	21.8	17.4	16	8.4
315	1000	9.4	7.2	3.3	10.55	22.65	18.55	17.25	8.95
315	1200	11.1	8.5	3.8	11.4	23.5	19.7	18.5	9.5
315	1500	12.6	9.6	4.2	12.2	24.9	21	20.2	10.3
400	300	0.4	1.9	1.7	7.1	14.5	11	9.8	5.3
400	500	1.9	2.8	2	7.8	15.5	11.7	11	5.9
400	600	2.2	3.3	2.2	8.2	16	12	11.6	6.2
400	900	6.8	5.2	2.8	9.5	18.3	14.1	14.1	7.5
400	1000	8.45	6.45	3.3	10.3	19.15	15.25	15.35	8.05
400	1200	10.1	7.7	3.8	11.1	20	16.4	16.6	8.6
400	1500	11.7	9	4.1	12	21.5	17.7	18.2	9.4
450	300	0.4	1.9	1.7	7.3	12.9	9.8	9.6	4.9
450	500	1.8	2.7	2.1	8.1	13.8	10.4	10.8	5.5
450	600	2.1	3.1	2.3	8.4	14.2	10.7	11.4	5.8
450	900	6.6	5	2.9	9.7	16.5	12.8	13.9	7
450	1000	8.25	6.3	3.4	10.55	17.4	13.95	15.15	7.55
450	1200	9.9	7.6	3.9	11.4	18.3	15.1	16.4	8.1
450	1500	11.5	8.8	4.2	12.2	19.7	16.4	18.1	8.9
500	300	0.4	1.7	1.5	6.3	12.4	8.6	8.5	4.7
500	500	1.6	2.4	1.8	7	13.3	9.1	9.6	5.2
500	600	1.9	2.8	1.9	7.3	13.7	9.3	10.1	5.5
500	900	6.1	4.7	2.5	8.6	16	11.4	12.6	6.7
500	1000	7.8	5.95	3	9.4	16.85	12.55	13.85	7.3
500	1200	9.5	7.2	3.5	10.2	17.7	13.7	15.1	7.9
500	1500	11.1	8.5	3.8	11	19.2	15	16.7	8.6
630	300	0.5	2.1	1.5	6.3	12	7.9	8.7	4.8
630	500	2	3	1.8	6.9	12.8	8.4	9.8	5.3
630	600	2.3	3.5	2	7.3	13.2	8.7	10.3	5.5
630	900	5.6	4.3	2.2	7.8	13.9	9.1	11.2	6
630	1000	7.25	5.55	2.7	8.6	14.8	10.25	12.45	6.6
630	1200	8.9	6.8	3.2	9.4	15.7	11.4	13.7	7.2
630	1500	10.3	7.9	3.5	10.1	16.8	12.3	15.1	7.8

ALNOR® ventilation systems
is a registered trademark protected by a technical patent. All modification rights reserved.

Silencers
SQQL-B-30



Description

The SQQL-B-30 silencers are made of a square duct for the outer cladding. The SQQL-B-30 has one branch port on the side wall. The clearance between the outer and inner cladding is filled with 30 mm thick sound-proofing mineral wool.

Insulation:
Insulation material: glass wool.
Insulation type: trimmed from reel, flexible.

Available materials - Product code examples

SQQL-B-30-...-...	- galvanized steel sheet
SQQL-B-30-K-...-...	- 1.4301/304 stainless steel sheet
SQQL-B-30-K-...-...-316L	- 1.4404/316L stainless steel sheet
SQQL-B-30-A-...-...	- aluminium sheet

Product code examples

Product code: **SQQL-B-30 - aaa - bbb**

type
A
B

Dimensions

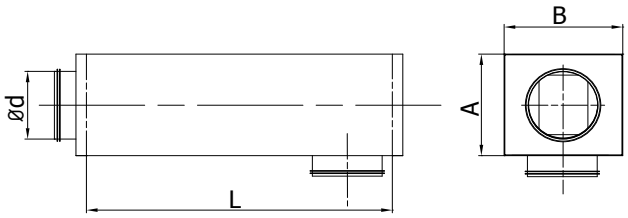

$Ød_{nom}$ (mm)	A (mm)	B (mm)	L (mm)	Weight (kg)
100	150	150	600	3.2
100	150	150	900	4.6
100	150	150	1200	5.9
125	175	175	600	3.6
125	175	175	900	5.1
125	175	175	1200	6.6
160	210	210	600	4.6
160	210	210	900	6.4
160	210	210	1200	8.2
200	250	250	600	5.9
200	250	250	900	8.3
200	250	250	1200	10.7
250	300	300	600	7.3
250	300	300	900	10.0
250	300	300	1200	12.7
315	365	365	600	9.2
315	365	365	900	10.8
315	365	365	1200	12.4
400	450	450	600	11.4
400	450	450	900	15.5
400	450	450	1200	19.5
450	500	500	600	13.5
450	500	500	900	19.5
450	500	500	1200	22.5
500	550	550	600	14.0
500	550	550	900	19.8
500	550	550	1200	24.7
630	680	680	600	30.5
630	680	680	900	46.5
630	680	680	1200	37.5

ALNOR® ventilation systems
is a registered trademark protected by a technical patent. All modification rights reserved.

Silencers

SQQL-B-30

Ød$_{nom}$ (mm)	A (mm)	B (mm)	L (mm)	Weight (kg)
250	300	300	300	4.18
250	300	300	500	6.39
250	300	300	600	7.30
250	300	300	900	10.00
250	300	300	1000	11.01
250	300	300	1200	12.70
250	300	300	1500	15.56
315	365	365	300	5.26
315	365	365	500	8.05
315	365	365	600	9.20
315	365	365	900	10.80
315	365	365	1000	10.75
315	365	365	1200	12.40
315	365	365	1500	15.19
400	450	450	300	6.52
400	450	450	500	9.98
400	450	450	600	11.40
400	450	450	900	15.50
400	450	450	1000	16.90
400	450	450	1200	19.50
400	450	450	1500	23.89
450	500	500	300	7.73
450	500	500	500	11.81
450	500	500	600	13.50
450	500	500	900	19.50
450	500	500	1000	19.50
450	500	500	1200	22.50
450	500	500	1500	27.56
500	550	550	300	8.01
500	550	550	500	12.25
500	550	550	600	14.00
500	550	550	900	19.80
500	550	550	1000	21.41
500	550	550	1200	24.70
500	550	550	1500	30.26
630	680	680	300	17.45
630	680	680	500	26.69
630	680	680	600	30.50
630	680	680	900	46.50
630	680	680	1000	32.50
630	680	680	1200	37.50
630	680	680	1500	45.94

Technical specifications

Pressure loss (Pa)

Ød$_{nom}$ (mm)	L (mm)	2 m/s	4 m/s	8 m/s	10 m/s	12 m/s
100	300	0.4	1.5	6.2	9.6	13.9
100	500	0.4	1.7	6.9	10.7	15.5
100	600	0.4	1.7	7.0	10.9	15.7
100	900	0.5	1.9	7.7	12.0	17.3
100	1000	0.55	2.2	8.8	13.75	19.85
100	1200	0.6	2.5	9.9	15.5	22.4
100	1500	0.8	3.0	12.0	18.8	27.0
125	300	0.3	1.3	5	7.8	11.3
125	500	0.3	1.4	5.6	8.7	12.5
125	600	0.4	1.4	5.7	8.9	12.9
125	900	0.4	1.6	6.4	10.0	14.4
125	1000	0.5	2	8	12.5	18
125	1200	0.6	2.4	9.6	15.0	21.6
125	1500	0.7	2.9	11.6	18.1	26.1
160	300	0.3	1.1	4.2	6.6	9.5
160	500	0.3	1.2	4.7	7.4	10.6
160	600	0.3	1.2	4.8	7.6	10.9
160	900	0.3	1.4	5.5	8.6	12.4
160	1000	0.4	1.65	6.65	10.35	14.95
160	1200	0.5	1.9	7.8	12.1	17.5
160	1500	0.6	2.3	9.4	14.6	21.1
200	300	0.2	0.7	3	4.6	6.7
200	500	0.2	0.8	3.3	5.2	7.4
200	600	0.2	0.9	3.4	5.3	7.7
200	900	0.3	1.0	4.1	6.4	9.2
200	1000	0.35	1.3	5.25	8.2	11.8
200	1200	0.4	1.6	6.4	10.0	14.4
200	1500	0.5	1.9	7.7	12.1	17.4
250	300	0.2	0.8	3.2	4.9	7.1
250	500	0.2	0.9	3.5	5.5	7.9
250	600	0.2	0.9	3.6	5.7	8.2
250	900	0.3	1.1	4.3	6.8	9.8
250	1000	0.35	1.4	5.45	8.6	12.35
250	1200	0.4	1.7	6.6	10.4	14.9
250	1500	0.5	1.9	7.5	11.8	16.9
315	300	0.1	0.5	2.1	3.3	4.8
315	500	0.1	0.6	2.4	3.7	5.4
315	600	0.2	0.6	2.5	3.9	5.6
315	900	0.2	0.8	3.2	5.0	7.2
315	1000	0.25	1.1	4.35	6.8	9.8
315	1200	0.3	1.4	5.5	8.6	12.4
315	1500	0.4	1.7	6.6	10.4	14.9

ALNOR® ventilation systems
is a registered trademark protected by a technical patent. All modification rights reserved.

Silencers
SQQL-B-30

Ød nom (mm)	L (mm)	2 m/s	4 m/s	8 m/s	10 m/s	12 m/s
400	300	0.1	0.4	1.5	2.4	3.5
400	500	0.1	0.4	1.7	2.7	3.9
400	600	0.1	0.4	1.8	2.8	4.0
400	900	0.2	0.6	2.5	3.8	5.5
400	1000	0.25	0.9	3.65	5.6	8.1
400	1200	0.3	1.2	4.8	7.4	10.7
400	1500	0.4	1.6	6.2	9.7	14.0
450	300	0.1	0.3	1.4	2.2	3.1
450	500	0.1	0.4	1.5	2.4	3.5
450	600	0.1	0.4	1.6	2.5	3.6
450	900	0.1	0.6	2.3	3.6	5.2
450	1000	0.2	0.85	3.45	5.35	7.75
450	1200	0.3	1.1	4.6	7.1	10.3
450	1500	0.4	1.5	6.0	9.3	13.4

Ød nom (mm)	L (mm)	2 m/s	4 m/s	8 m/s	10 m/s	12 m/s
500	300	0.1	0.3	1.2	1.9	2.7
500	500	0.1	0.3	1.3	2.0	2.9
500	600	0.1	0.3	1.4	2.2	3.1
500	900	0.1	0.5	2.1	3.2	4.7
500	1000	0.2	0.8	3.2	5	7.25
500	1200	0.3	1.1	4.3	6.8	9.8
500	1500	0.4	1.4	5.8	9.0	13.0
630	300	0.1	0.3	1.2	1.8	2.6
630	500	0.1	0.3	1.3	2.0	2.9
630	600	0.1	0.3	1.3	2.1	3.0
630	900	0.1	0.4	1.7	2.6	3.8
630	1000	0.15	0.7	2.85	4.4	6.4
630	1200	0.2	1.0	4.0	6.2	9.0
630	1500	0.3	1.2	4.8	7.5	10.8

Sound insulation (dB)

Ød (mm)	L (mm)	63 Hz	125 Hz	250 Hz	500 Hz	1k	2k	4k	8k
100	300	1	4.6	3.6	14	32.6	36.4	21.8	11.4
100	500	4.4	6.7	4.3	15.5	34.8	38.7	24.5	12.7
100	600	5.1	7.6	4.7	16.2	35.8	39.7	25.7	13.3
100	900	12.5	9.5	5.2	17.5	38.1	41.9	28.2	14.5
100	1000	13.05	9.95	5.7	18.3	38.95	43.05	29.5	15.1
100	1200	13.6	10.4	6.2	19.1	39.8	44.2	30.8	15.7
100	1500	15.7	12	6.8	20.5	42.7	47.7	33.8	17
125	300	0.9	4	3.2	12.6	29.7	33.6	19.1	10.1
125	500	3.8	5.8	3.8	13.9	31.7	35.7	21.5	11.2
125	600	4	9	3	13	30	37	24	13
125	900	11.3	8.6	4.7	15.9	34.9	38.8	25.2	13.1
125	1000	12	9.15	4.9	16.2	35.2	39.25	25.7	13.3
125	1200	12.7	9.7	5.1	16.5	35.5	39.7	26.2	13.5
125	1500	14.6	11.2	5.6	17.7	38.1	43	28.8	14.6
160	300	0.8	3.4	2.7	11.1	26.6	29.2	16.5	8.8
160	500	3.3	4.9	3.3	12.2	28.4	31	18.6	9.8
160	600	3.9	5.8	3.6	12.9	29.4	31.9	19.8	10.4
160	900	6.8	5.2	5.4	15.7	34.2	33.8	21	10.4
160	1000	10.2	7.8	5.3	15.8	33.8	35.05	22.9	11.55
160	1200	13.6	10.4	5.2	15.9	33.4	36.3	24.8	12.7
160	1500	15.6	12	5.7	17	35.8	39.2	27.2	13.8

ALNOR® ventilation systems
is a registered trademark protected by a technical patent. All modification rights reserved.

Silencers

SQQL-B-30

Ød (mm)	L (mm)	63 Hz	125 Hz	250 Hz	500 Hz	1k	2k	4k	8k
200	300	0.6	2.5	2.2	9.4	25.4	26.4	15.6	8
200	500	2.5	3.7	2.7	10.4	27.1	28	17.5	8.9
200	600	3.1	4.7	3	11	28	29	18.6	9.5
200	900	8.6	6.6	3.6	12.3	30.3	31.1	21.1	10.7
200	1000	10.25	7.85	4.1	13.15	31.2	32.25	22.35	11.3
200	1200	11.9	9.1	4.6	14	32.1	33.4	23.6	11.9
200	1500	13.8	10.5	5	15	34.4	36.1	26	12.9
250	300	0.6	2.4	2.1	8.8	21.1	20.8	12.5	6.8
250	500	2.4	3.5	2.5	9.7	22.6	22.1	14.1	7.6
250	600	3	4.4	2.9	10.3	23.5	23.1	15.3	8.1
250	900	8.4	6.4	3.4	11.7	25.8	25.2	17.8	9.3
250	1000	10.05	7.7	3.9	12.5	26.65	26.35	19.1	9.9
250	1200	11.7	9	4.4	13.3	27.5	27.5	20.4	10.5
250	1500	13.2	10.1	4.8	14.1	29	28.8	21.9	11.2
315	300	0.5	2.1	1.6	7	17.3	16.4	11	5.9
315	500	2	3	1.9	7.7	18.5	17.4	12.4	6.6
315	600	2.6	3.9	2.2	8.4	19.5	15.2	13.6	7.2
315	900	7.7	5.9	2.8	9.7	21.8	17.4	16	8.4
315	1000	9.4	7.2	3.3	10.55	22.65	18.55	17.25	8.95
315	1200	11.1	8.5	3.8	11.4	23.5	19.7	18.5	9.5
315	1500	12.6	9.6	4.2	12.2	24.9	21	20.2	10.3
400	300	0.4	1.9	1.7	7.1	14.5	11	9.8	5.3
400	500	1.9	2.8	2	7.8	15.5	11.7	11	5.9
400	600	2.2	3.3	2.2	8.2	16	12	11.6	6.2
400	900	6.8	5.2	2.8	9.5	18.3	14.1	14.1	7.5
400	1000	8.45	6.45	3.3	10.3	19.15	15.25	15.35	8.05
400	1200	10.1	7.7	3.8	11.1	20	16.4	16.6	8.6
400	1500	11.7	9	4.1	12	21.5	17.7	18.2	9.4
450	300	0.4	1.9	1.7	7.3	12.9	9.8	9.6	4.9
450	500	1.8	2.7	2.1	8.1	13.8	10.4	10.8	5.5
450	600	2.1	3.1	2.3	8.4	14.2	10.7	11.4	5.8
450	900	6.6	5	2.9	9.7	16.5	12.8	13.9	7
450	1000	8.25	6.3	3.4	10.55	17.4	13.95	15.15	7.55
450	1200	9.9	7.6	3.9	11.4	18.3	15.1	16.4	8.1
450	1500	11.5	8.8	4.2	12.2	19.7	16.4	18.1	8.9
500	300	0.4	1.7	1.5	6.3	12.4	8.6	8.5	4.7
500	500	1.6	2.4	1.8	7	13.3	9.1	9.6	5.2
500	600	1.9	2.8	1.9	7.3	13.7	9.3	10.1	5.5
500	900	6.1	4.7	2.5	8.6	16	11.4	12.6	6.7
500	1000	7.8	5.95	3	9.4	16.85	12.55	13.85	7.3
500	1200	9.5	7.2	3.5	10.2	17.7	13.7	15.1	7.9
500	1500	11.1	8.5	3.8	11	19.2	15	16.7	8.6
630	300	0.5	2.1	1.5	6.3	12	7.9	8.7	4.8
630	500	2	3	1.8	6.9	12.8	8.4	9.8	5.3
630	600	2.3	3.5	2	7.3	13.2	8.7	10.3	5.5
630	900	5.6	4.3	2.2	7.8	13.9	9.1	11.2	6
630	1000	7.25	5.55	2.7	8.6	14.8	10.25	12.45	6.6
630	1200	8.9	6.8	3.2	9.4	15.7	11.4	13.7	7.2
630	1500	10.3	7.9	3.5	10.1	16.8	12.3	15.1	7.8

ALNOR® ventilation systems
is a registered trademark protected by a technical patent. All modification rights reserved.

Attenuating bends
BSIL



Description

The BSIL attenuating bend has been designed for ventilation systems where confined installation space or other requirements prevent using straight (ducted) silencers, e.g. SIL.
The attenuating bend is made of two duct bends inside one another. The inner bend is made of perforated steel sheet. The clearance between the outer cladding and the inner perforated cladding is filled with sound-insulating material. To prevent its entrainment and loss due to the air flow, the sound-insulating material is lined with a cloth.
The standard attenuating bends sized Ø315 mm are supplied with the SPIRAL® system connectors. The attenuating bends sized Ø355 mm and larger are supplied with the SPIRAL® system NSL connectors.

The BSIL attenuating bends with 50 mm thick insulation are available in the following diameter sizes: Ø125/160/200/250/315. The attenuating bends with 100 mm thick insulation are available in the following diameter sizes: Ø125/160/200/250/315/400/500/630.

The silencers are fully made from galvanized steel sheets.
The sound insulation has been measured according to GLSM guidelines.
Patented design.

Insulation:
Insulation material: glass wool.
Insulation type: trimmed from reel, flexible.

Available materials - Product code examples

BSIL-...-...	- galvanized steel sheet
BSIL-K-...-...	- 1.4301/304 stainless steel sheet
BSIL-K-...-...-316L	- 1.4404/316L stainless steel sheet
BSIL-A-...-...	- aluminium sheet

Product code examples
Product code: **BSIL - aaa - bbb**

type
Insulation thickness
Ød

Dimensions

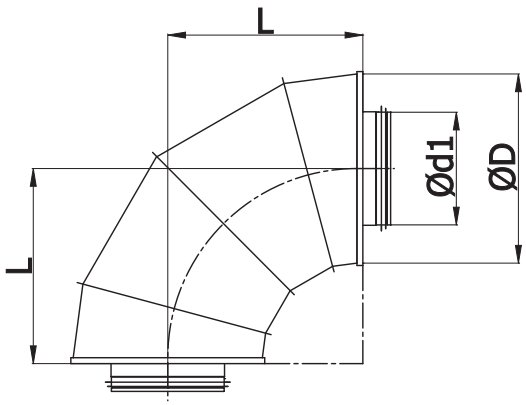

BSIL-50 - 50 mm insulation

Ød 1 nom (mm)	L (mm)	D (mm)	Sound insulation (dB) at frequency (Hz)							Weight (kg)
			125	250	500	1000	2000	4000	8000	
125	200	224	2	6	14	29	30	31	24	4
160	240	260	3	6	14	26	34	30	25	6
200	305	315	3	8	20	26	32	30	25	10
250	370	355	2	6	17	29	28	24	22	11
315	370	450	3	7	13	15	15	14	12	18

BSIL-100 - 100 mm insulation

Ød 1 nom (mm)	L (mm)	D (mm)	Sound insulation (dB) at frequency (Hz)							Weight (kg)
			125	250	500	1000	2000	4000	8000	
125	260	315	6	13	22	25	35	39	33	9
160	280	355	7	14	18	26	38	33	25	11
200	325	400	6	15	22	29	34	32	27	15
250	370	450	4	11	16	27	28	26	22	20
315	375	500	4	11	15	18	17	15	14	21
400	420	600	5	9	14	14	15	14	12	30
500	485	710	5	13	19	14	13	12	10	42
630	610	800	6	14	17	13	12	12	11	62

ALNOR® ventilation systems
is a registered trademark protected by a technical patent. All modification rights reserved.

Attenuating bends

BSIL

Technical specifications

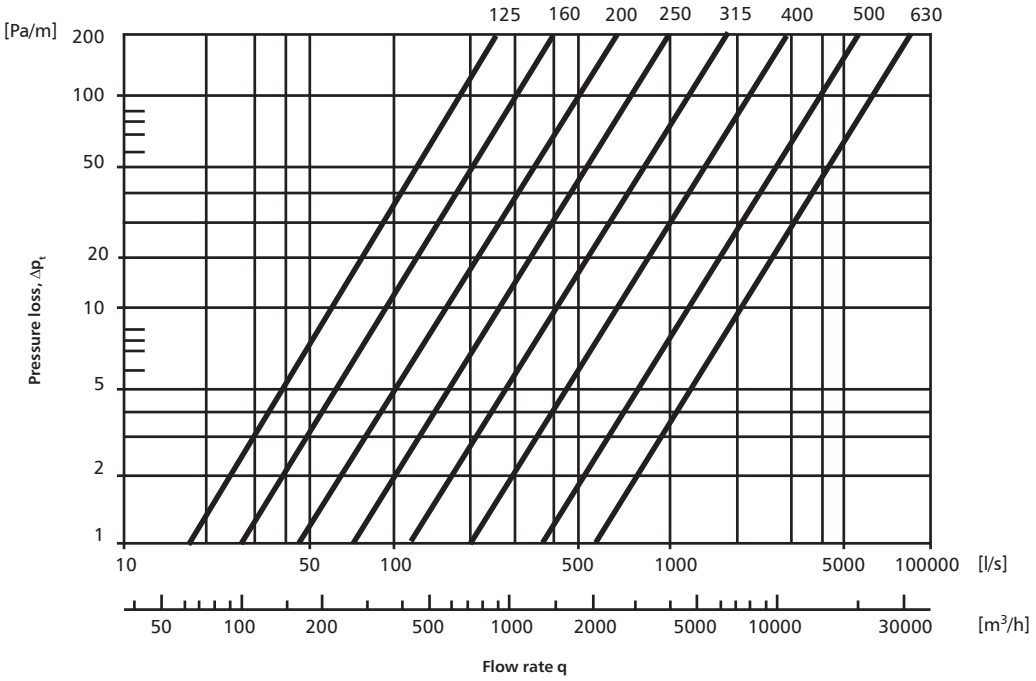

ALNOR® ventilation systems
is a registered trademark protected by a technical patent. All modification rights reserved.

Flexible silencers with aluminium-polyester cladding
SLEFL



Description

The SLEFL flexible silencer is made of the Alnor Flex perforated duct. The sound insulating layer is 25 mm thick and clad in aluminium and polyester. The silencer is connected to the ductwork with male flanges made of metal. The product is available in two length sizes, 600 mm and 1200 mm.

Other silencer versions are available on request:
with EPDM gaskets, female flanges, or in other length sizes.

Insulation:
Insulation material: glass wool.
Insulation type: trimmed from reel, flexible.

Temperature range: -20°C to +140°C

Thermal insulation performance of mineral wool:
λ = 0.034 W/mK at 24°C

Pressure drop:
See the enclosed diagram.

Fire resistance:
The silencers are made from fire-proof materials.

Production version - Product code example:
SLEFL - with male connections (standard)
SLEFLL - with male connections and EPDM gaskets
SLEFLF - with female connections

Product code examples
Product code: **SLEFL - 25 - 100 - 1000**

type
Insulation
Silencer diameter
Silencer length

Dimensions

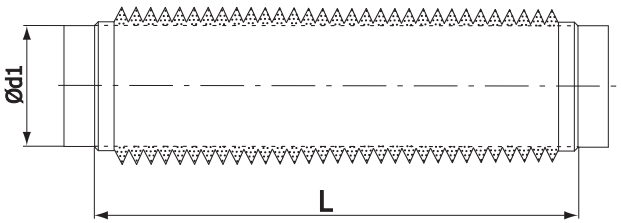

Ød1 nom (mm)	L (mm)	Sound insulation (dB) at frequency (Hz)						
		125	250	500	1000	2000	4000	8000
80	600	19	29	31	15	21	13	8
100	600	19	30	27	14	15	10	7
125	600	17	24	22	11	14	10	7
160	600	13	19	18	10	12	7	6
200	600	14	17	12	7	11	7	5
250	600	15	15	10	7	11	6	5
315	600	14	12	8	6	7	4	4

Ød1 nom (mm)	L (mm)	Sound insulation (dB) at frequency (Hz)						
		125	250	500	1000	2000	4000	8000
80	1200	30	40	38	28	31	20	13
100	1200	29	37	33	27	30	24	13
125	1200	30	36	30	26	27	25	12
160	1200	17	29	28	23	26	23	11
200	1200	24	30	23	20	23	16	10
250	1200	22	23	18	17	16	8	7
315	1200	23	18	15	15	12	8	6

50 mm thick insulation and
L = 600 mm and 1200 mm are available on request.

ALNOR® ventilation systems
is a registered trademark protected by a technical patent. All modification rights reserved.

Flexible silencers with aluminium-polyester cladding

SLEFL

Technical specifications

Pressure loss across SLEFL-25 silencer

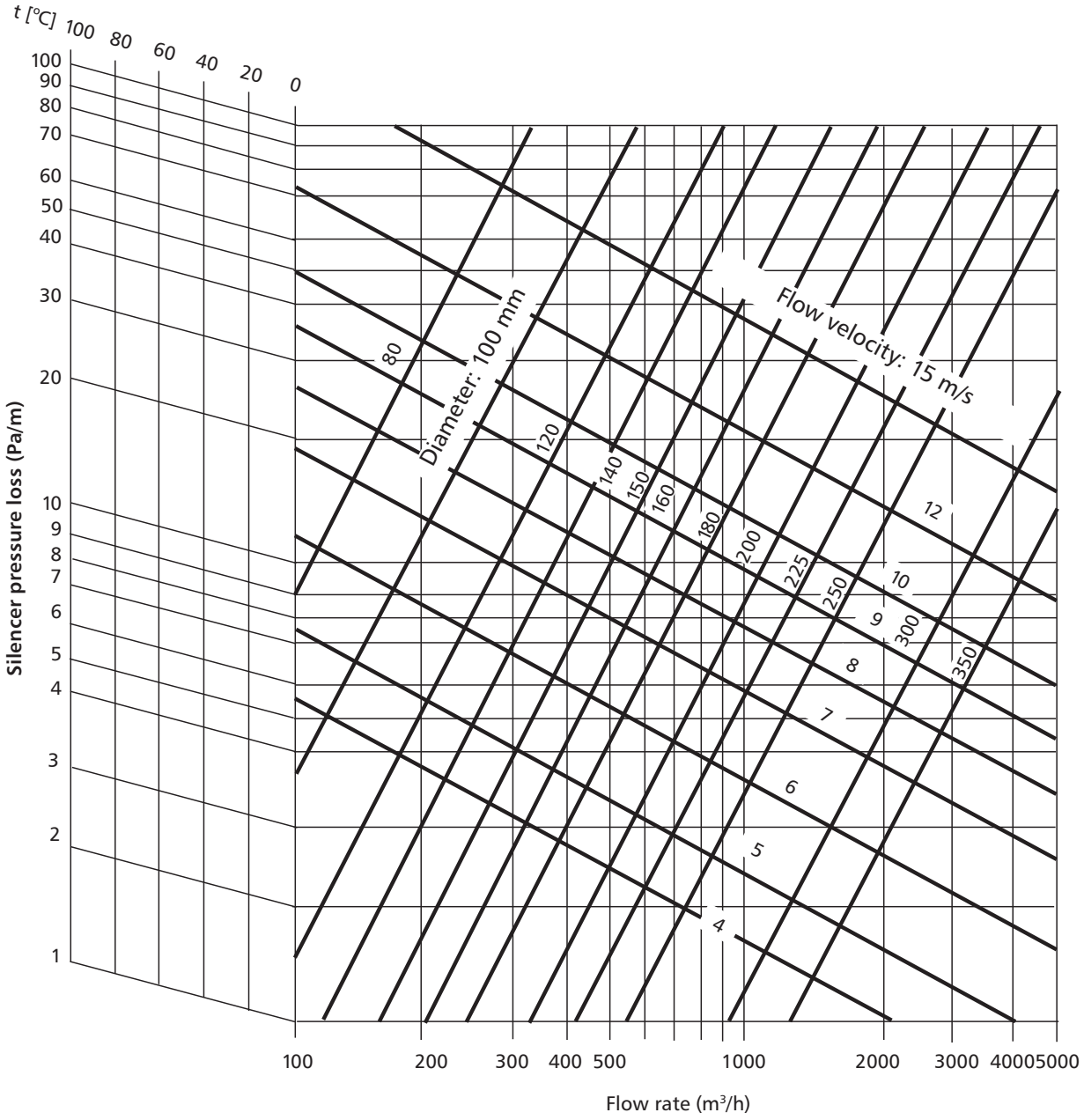

The pressure loss has been calculated for the silencer stretched and laid straight.
Silencer length = 1.0 m
1 Pa = 0.01 mbar = ca. 0.1 mm WG

ALNOR® ventilation systems
is a registered trademark protected by a technical patent. All modification rights reserved.

Flexible silencers with polyethylene cladding

SLEFL-P



Description

The SLEFL-P flexible silencer is made of the Alnor Flex perforated duct. The sound insulating layer is 25 mm thick and clad in polyethylene. The silencer is connected to the ductwork with male flanges made of metal. The product is available in two length sizes, 600 mm and 1200 mm.

Other silencer versions are available on request:
with EPDM gaskets, female flanges, or in other length sizes.

Insulation:
Insulation material: glass wool.
Insulation type: trimmed from reel, flexible.

Temperature range: -20°C to +140°C

Thermal insulation performance of mineral wool:
λ = 0.034 W/mK at 24°C

Pressure drop:
See the enclosed diagram.

Fire resistance:
The silencers are made from fire-proof materials.

Production version - Product code example:
SLEFL-P - with male connections (standard version)
SLEFLL-P - with male connections and EPDM gaskets
SLEFLF-P - with female connections

Product code examples
Product code: **SLEFL-P.. - 25 - 100 - 1000**

type
Insulation thickness
Silencer diameter
Silencer length

Dimensions

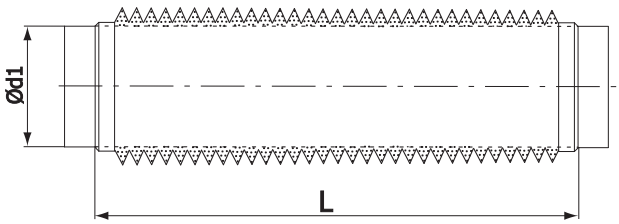

$Ød_{1\ nom}$ (mm)	L (mm)	Sound insulation (dB) at frequency (Hz)						
		125	250	500	1000	2000	4000	8000
80	600	19	29	31	28	27	13	8
100	600	19	30	27	25	19	10	7
125	600	17	24	22	21	18	10	7
160	600	13	19	18	18	16	7	6
200	600	14	17	12	13	14	7	5
250	600	15	15	10	12	14	6	5
315	600	12	12	8	11	9	5	4

$Ød_{1\ nom}$ (mm)	L (mm)	Sound insulation (dB) at frequency (Hz)						
		125	250	500	1000	2000	4000	8000
80	1200	30	40	38	37	36	20	13
100	1200	29	37	33	36	35	24	13
125	1200	30	36	30	34	32	25	12
160	1200	17	29	28	30	30	23	11
200	1200	24	30	23	26	27	16	10
250	1200	22	23	18	22	19	8	7
315	1200	23	18	15	20	14	8	6

50 mm thick insulation and
L = 500 mm and 1000 mm are available on request.

ALNOR® ventilation systems
is a registered trademark protected by a technical patent. All modification rights reserved.

Flexible silencers with polyethylene cladding

SLEFL-P

Technical specifications

Pressure loss across SLEFL-P flexible silencer

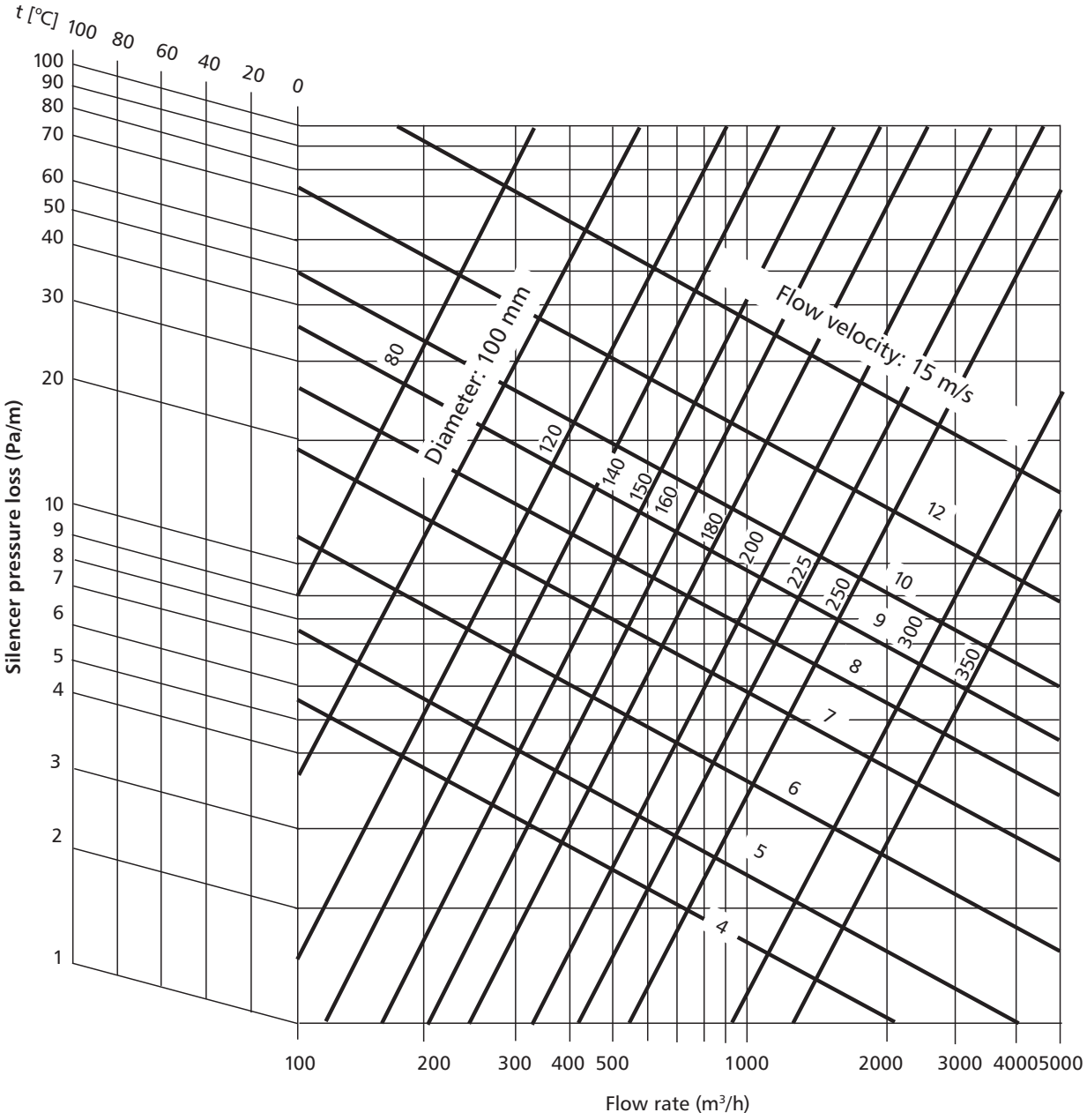

Pressure loss across metal duct silencers
Silencer length = 1.0 m
1 Pa = 0.01 mbar = ca. 0.1 mm WG

ALNOR® ventilation systems
is a registered trademark protected by a technical patent. All modification rights reserved.

Flexible silencers with aluminium-polyester foil cladding

SLEAL



Description

The SLEAL flexible silencer is made of the ALUDUCT perforated duct. The sound-insulating material is 25 mm thick and lined with the 45-micron thick ALUDUCT AD-L cladding reinforced with a steel wire. The flexible silencer is installed directly on the fittings with band clips and self-adhesive sealing tapes. The product is available in two length sizes, 500 mm and 1000 mm.

Insulation:
Insulation material: glass wool.
Insulation type: trimmed from reel, flexible.

Temperature range: -20°C to +140°C

Thermal insulation performance of mineral wool:
λ = 0.034 W/mK at 24°C

Sound insulation:
See the enclosed diagram.

Fire resistance:
The silencers are made from fire-proof materials.

Product code examples
Product code: **SLEAL - 25 - 100 - 1000**

type
Insulation thickness
Silencer diameter
Silencer length

Dimensions

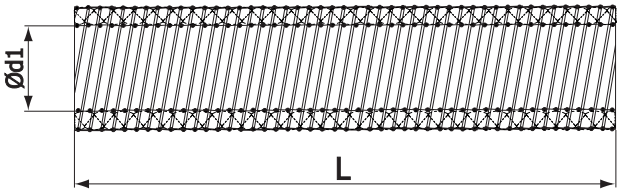

$Ød_{nom}$ (mm)	L (mm)
80	500, 1000
100	500, 1000
125	500, 1000
160	500, 1000
200	500, 1000
250	500, 1000
315	500, 1000

L = 600 mm and 1200 mm are available on request.

Technical specifications

Chart 1: Sound insulation
Sound insulation thickness: 25 mm, duct length: 1000 mm

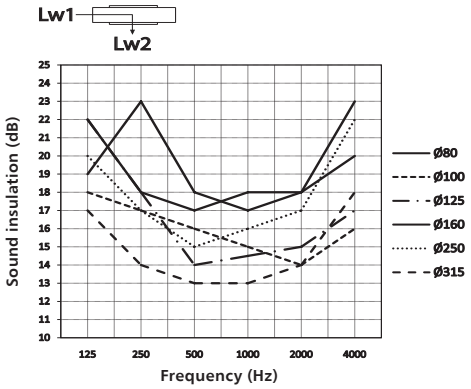

Chart 2: Sound insulation
Sound insulation thickness: 25 mm, duct length: 1000 mm

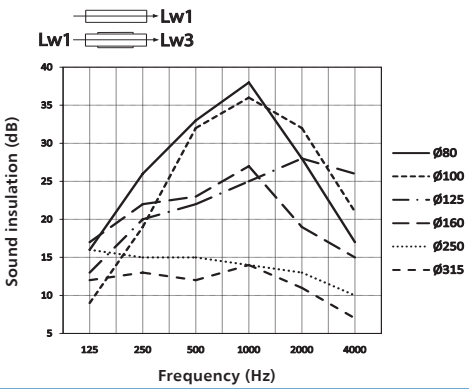

ALNOR® ventilation systems
is a registered trademark protected by a technical patent. All modification rights reserved.

Flexible silencers with aluminium-polyester cladding

SLEAL

Technical specifications

Chart 1: Pressure loss characteristics

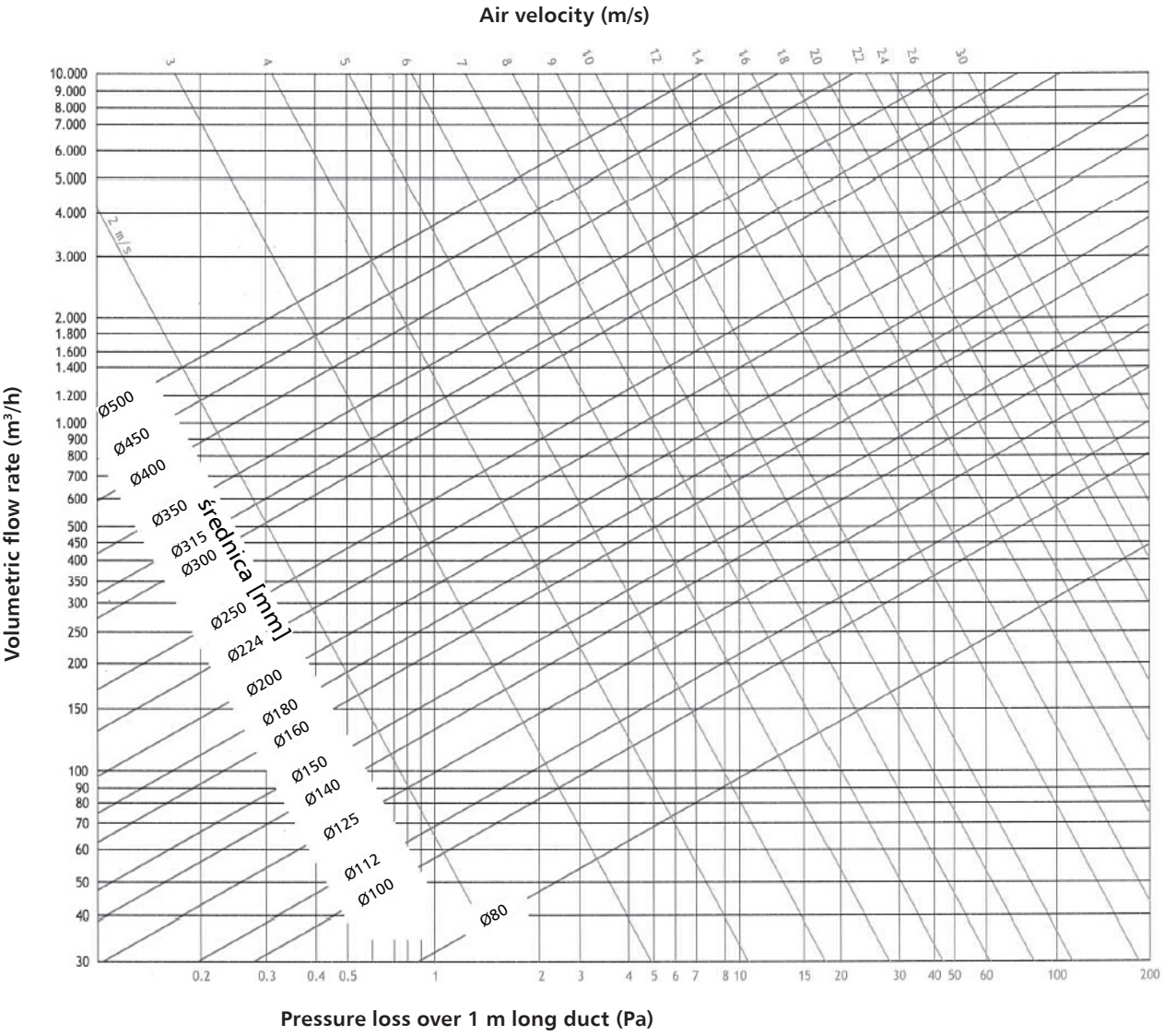

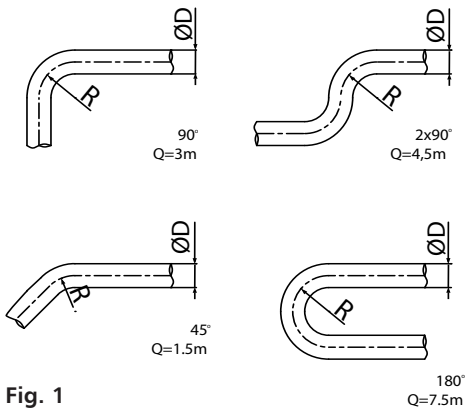

Fig. 1

Temperature	-20°C	-0°C	+20°C	+40°C	+60°C	+80°C	+100°C
Correction factor	1.158	1.073	1.000	0.936	0.880	0.830	0.785

Example

Z=Q x (D/300)

Z - duct length equivalent (m)
Q - length (m) (see Fig. 1)
D - duct diameter (mm)

Inputs:
Air velocity = 5m/s
Duct diameter = 200 mm
90° bend
Duct length = 1 m

To be calculated:
Pressure loss = ?

Calculation:
Pressure loss over 1 m of length = 3 Pa (see Chart 1)
Q = 3m (see Fig. 1)
Z = 3 x (200/300) = 1.99 m
Pressure loss = (1.99+1) x 3 Pa/m = 8.97 Pa

ALNOR® ventilation systems
is a registered trademark protected by a technical patent. All modification rights reserved.

Flexible silencers with aluminium-polyester cladding

SLESD



Description

The SLESD flexible silencer is made of the ALUDUCT perforated duct. The sound-insulating material is 25 mm thick and lined with the 45-micron thick ALUDUCT AD-L cladding. The silencer is connected to the ductwork with male flanges made of metal. The product is available in two length sizes, 500 mm and 1000 mm.

Other silencer versions are available on request:
with EPDM gaskets, female flanges, or in other length sizes.

Insulation:
Insulation material: glass wool.
Insulation type: trimmed from reel, flexible.

Temperature range: -20°C to +140°C

Thermal insulation performance of mineral wool:
λ = 0.034 W/mK at 24°C

Sound insulation:
See the enclosed diagram.

Fire resistance:
The silencers are made from fire-proof materials.

Production version - Product code example:
SLESD - with male connections (standard)
SLESDL - with male connections and EPDM gaskets
SLESDF - with female connections

Product code examples
Product code: **SLESD - 25 - 100 - 1000**

type
Insulation thickness
Silencer diameter
Silencer length

Dimensions

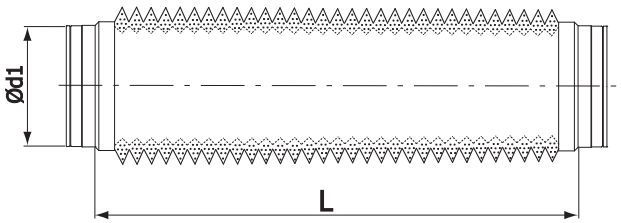

$Ød_{nom}$ (mm)	L (mm)
80	500, 1000
100	500, 1000
125	500, 1000
160	500, 1000
200	500, 1000
250	500, 1000
315	500, 1000

50 mm thick insulation and
L = 600 mm and 1200 mm are available on request.

Technical specifications

Chart 1: Sound insulation
Sound insulation thickness: 25 mm, duct length: 1000 mm

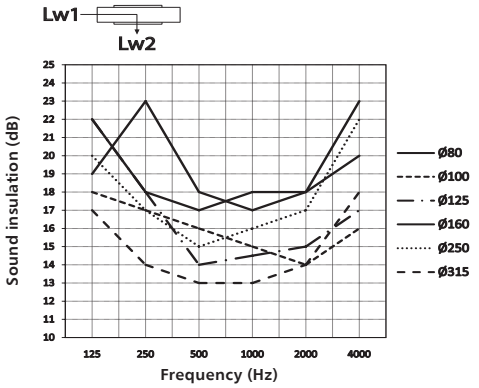

Chart 2: Sound insulation
Sound insulation thickness: 25 mm, duct length: 1000 mm

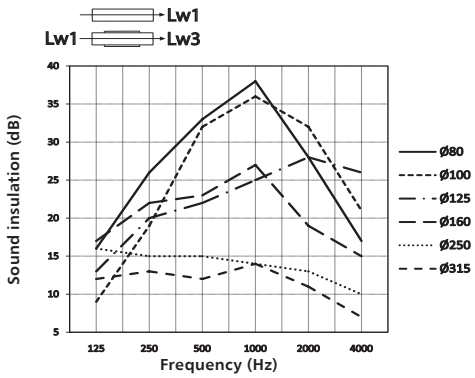

ALNOR® ventilation systems
is a registered trademark protected by a technical patent. All modification rights reserved.

Flexible silencers with aluminium-polyester cladding

SLESD

Technical specifications

Chart 1: Pressure loss characteristics

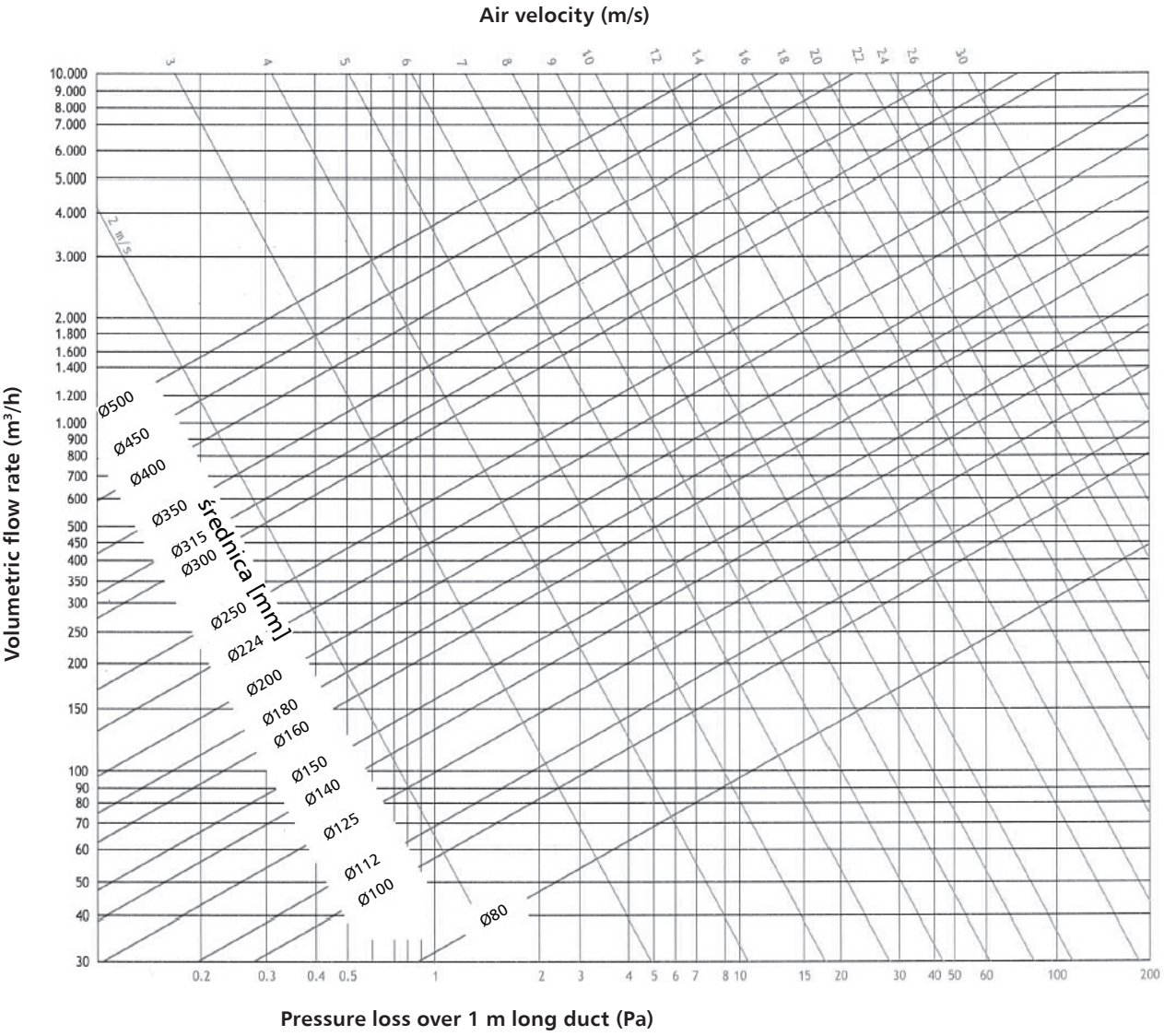

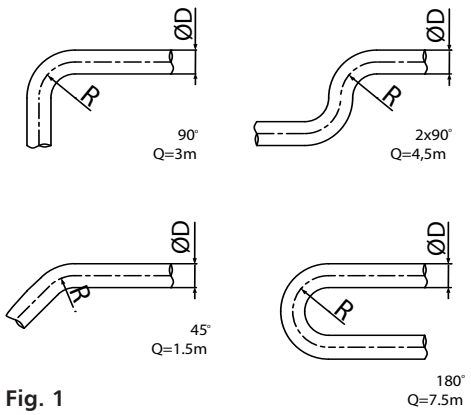

Fig. 1

Temperature	-20°C	-0°C	+20°C	+40°C	+60°C	+80°C	+100°C
Correction factor	1.158	1.073	1.000	0.936	0.880	0.830	0.785

Example

Z=Q x (D/300)

Z - duct length equivalent (m)
Q - length (m) (see Fig. 1)
D - duct diameter (mm)

Inputs:
Air velocity = 5m/s
Duct diameter = 200 mm
90° bend
Duct length = 1 m

To be calculated:
Pressure loss = ?

Calculation:
Pressure loss over 1 m of length = 3 Pa (see Chart 1)
Q = 3m (see Fig. 1)
Z = 3 x (200/300) = 1.99 m
Pressure loss = (1.99+1) x 3 Pa/m = 8.97 Pa

ALNOR® ventilation systems
is a registered trademark protected by a technical patent. All modification rights reserved.

Flexible silencers with aluminium cladding
SLEAF



Description

The SLEAF flexible silencer is made of two AF-AL flexible ducts, one placed in the other. The sound insulation thickness is 25 mm. Both ends of the silencer are provided with male reducers. The SLEAF silencer is available in two length sizes, 500 mm and 1000 mm.

Other silencer versions are available on request:
with EPDM gaskets, female flanges, or in other length sizes.

Insulation:
Insulation material: glass wool.
Insulation type: trimmed from reel, flexible.

Temperature range: -20°C to +140°C

Thermal insulation performance of mineral wool:
λ = 0.034 W/mK at 24°C

Sound insulation:
See the enclosed diagram.

Fire resistance:
The silencers are made from fire-proof materials.

Production version - Product code example:
SLEAF - with male connections (standard version)
SLEAFL - with male connections and EPDM gaskets
SLEAFF - with female connections

Product code examples
Product code: **SLEAF - 25 - 100 - 1000**

type
Insulation thickness
Silencer diameter
Silencer length

Dimensions

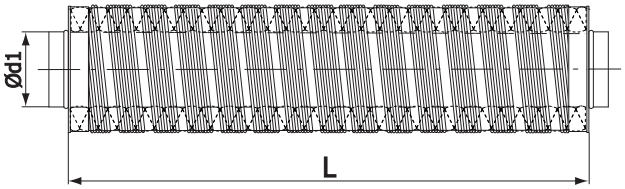

$Ød_{nom}$ (mm)	L (mm)
80	500, 1000
100	500, 1000
125	500, 1000
160	500, 1000
200	500, 1000
250	500, 1000
315	500, 1000

50 mm thick insulation and
L = 600 mm and 1200 mm are available on request.

ALNOR® ventilation systems
is a registered trademark protected by a technical patent. All modification rights reserved.

Flexible silencers with aluminium-polyester cladding
SLEFD



Description

The SLEFD flexible silencer is made of the Alnor Flex perforated duct. The sound insulating layer is 25 mm thick and clad in aluminium and polyester. The silencer is connected to the ductwork with male flanges made of metal. The product is available in two length sizes, 500 mm and 1000 mm.

Other silencer versions are available on request:
with EPDM gaskets, female flanges, or in other length sizes.

Insulation:
Insulation material: glass wool.
Insulation type: trimmed from reel, flexible.

Temperature range: -20°C to +140°C

Thermal insulation performance of mineral wool:
λ = 0.034 W/mK at 24°C

Pressure drop:
See the enclosed diagram.

Fire resistance:
The silencers are made from fire-proof materials.

Production version - Product code example:
SLEFD - with male connections (standard version)
SLEFDL - with male connections and EPDM gaskets
SLEFDF - with female connections

Product code examples
Product code: **SLEFD - 25 - 100 - 1000**

type
Insulation thickness
Silencer diameter
Silencer length

Dimensions

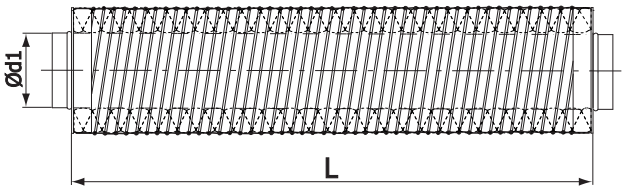

$Ød_{nom}$ (mm)	L (mm)
80	500, 1000
100	500, 1000
125	500, 1000
160	500, 1000
200	500, 1000
250	500, 1000
315	500, 1000

50 mm thick insulation and
L = 600 mm and 1200 mm are available on request.

ALNOR® ventilation systems
is a registered trademark protected by a technical patent. All modification rights reserved.

SLEFD

Technical specifications

Pressure loss across SLEFD-25 silencer

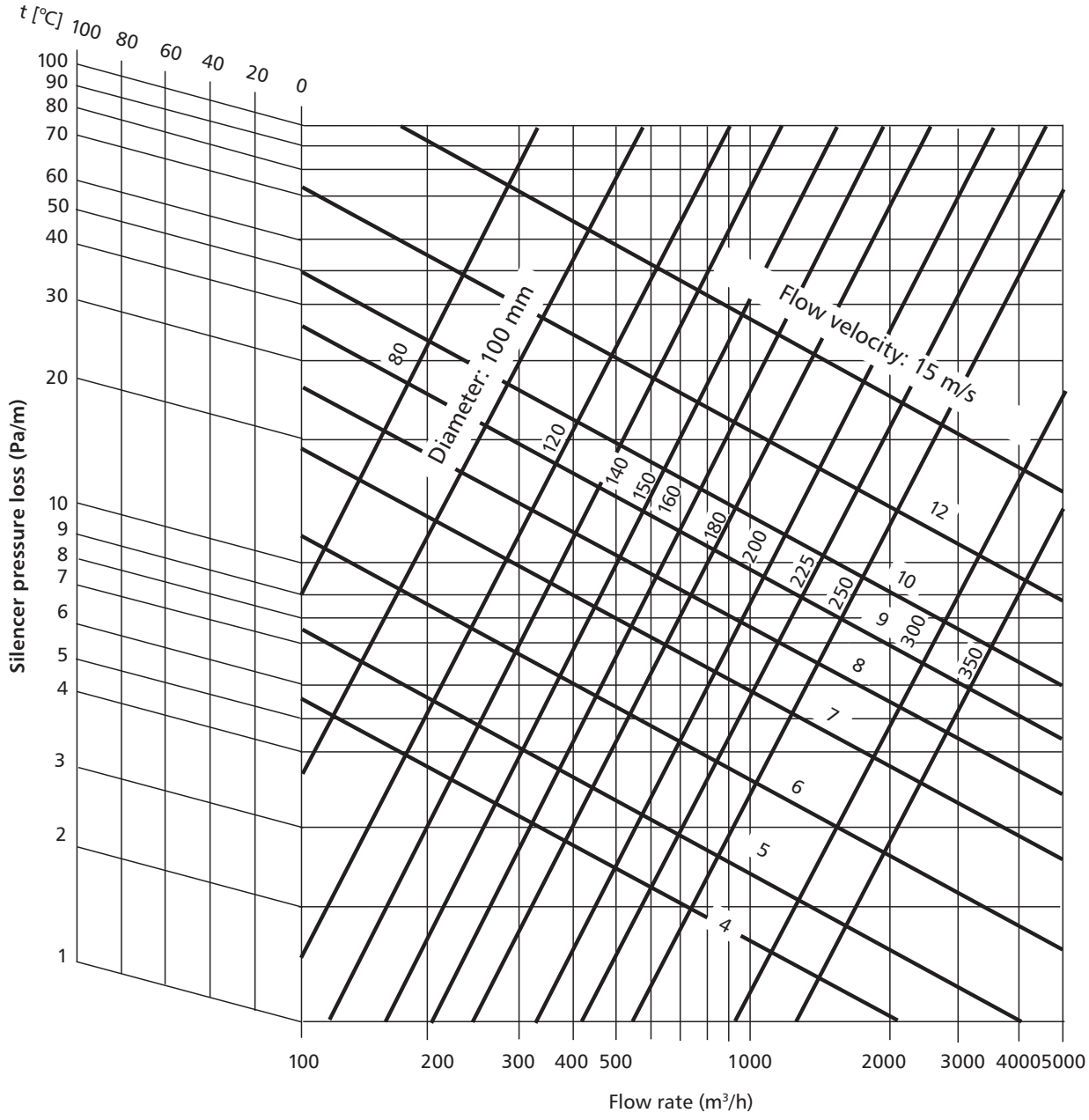

Pressure loss across metal duct silencers
Silencer length = 1.0 m
1 Pa = 0.01 mbar = ca. 0.1 mm WG

ALNOR® ventilation systems
is a registered trademark protected by a technical patent. All modification rights reserved.

Flexible textile silencer

SLEST



Description

The SLEST flexible silencer comprises an inner textile duct and an outer duct, between which is a sound-proofing layer made of 25 mm thick mineral wool lined with aluminium and polyester. The connection ends are finished with safe edges.

Other silencer versions are available on request:
with EPDM gaskets, female flanges, or in other length sizes.

Available length sizes:
500, 600, 1000, and 1200 mm.

Temperature range: -20°C to +140°C

Pressure drop:
See the enclosed diagram.

Production version - Product code example:
SLEST - with male connections (standard version)
SLESTL - with male connections and EPDM gaskets
SLESTF - with female connections

Product code examples
Product code: **SLEST - 25 - 100 - 1000**

type
Insulation thickness
Silencer diameter
Silencer length

Dimensions

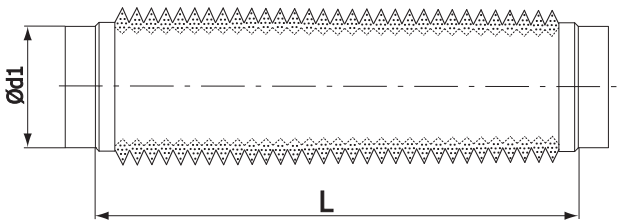

$Ød_{1\ nom}$ [mm]	L [mm]	Sound insulation (dB) at frequency (Hz)							
		63	125	250	500	1000	2000	4000	8000
80	600	4	18	21	19	17	17	25	20
100	600	4	14	17	18	15	15	18	13
125	600	-	5	9	13	16	16	18	10
160	600	3	9	14	11	12	13	12	7
200	600	5	9	12	9	10	11	7	5
250	600	6	10	10	9	8	9	4	2
315	600	6	10	9	7	8	8	3	2

$Ød_{1\ nom}$ (mm)	L (mm)	Sound insulation (dB) at frequency (Hz)						
		125	250	500	1000	2000	4000	8000
80	1200	29	42	40	35	38	54	52
100	1200	23	33	37	30	34	39	33
125	1200	9	18	28	32	36	39	25
160	1200	15	28	23	25	28	26	17
200	1200	15	24	19	20	25	16	12
250	1200	16	19	18	16	20	8	6
315	1200	16	18	15	15	17	6	6

The 50 mm sound-proofing insulation is available on request.

ALNOR® ventilation systems
is a registered trademark protected by a technical patent. All modification rights reserved.

Rectangula duct silencers

SLC/SRC/SPC

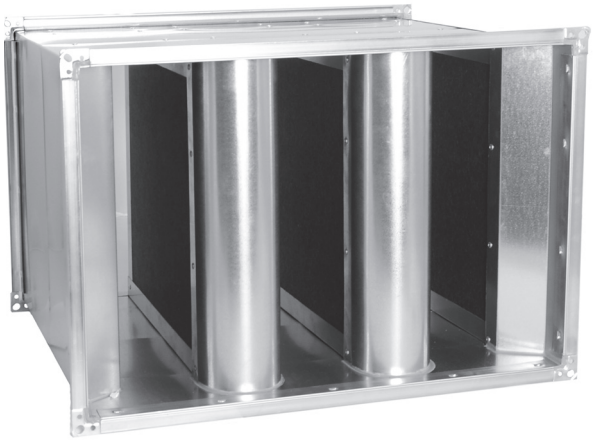

Description

The SLC and SRC rectangular duct silencers reduce the noise level in ventilation and A/C systems. This silencer type is usually installed between a fan and an air supply or exhaust duct, and upstream of air supply vents.
All silencers are made of a housing and inner baffles. The housing is made from galvanized steel sheet and its ends are framed with steel sheet angles.
All baffles inside the silencer have a round breast at one end and comprise a galvanized steel frame with a sound-insulating insert which absorbs the acoustic energy from the air flow.
The sound-insulating insert is a set of non-flammable mineral wool panels. The outer surface of the sound-insulating insert is lined with a special abrasion-resistant textile to protect the mineral wool from wear and tear. The mineral wool panels are finished with a glass fibre lining in black; this lining is suitable for systems with a maximum air flow rate of 20 m/s. The maximum heat medium temperature is 250°C. The product is non-flammable.
The products with larger dimensions a and/or b feature compound baffles.

There are three baffle design types:
L - sound-absorbing baffles;
R - sound-absorbing resonator baffles;
P - perforated sound-absorbing resonator baffles

The baffle spacing s ranges from 40 to 100 mm.
The baffle surfaces should be protected against damage during transport, storage and on-site installation of the silencers.

The SLC, SRC and SPC rectangular duct silencers are installed in the ductwork with the baffles upright.

Dimensions

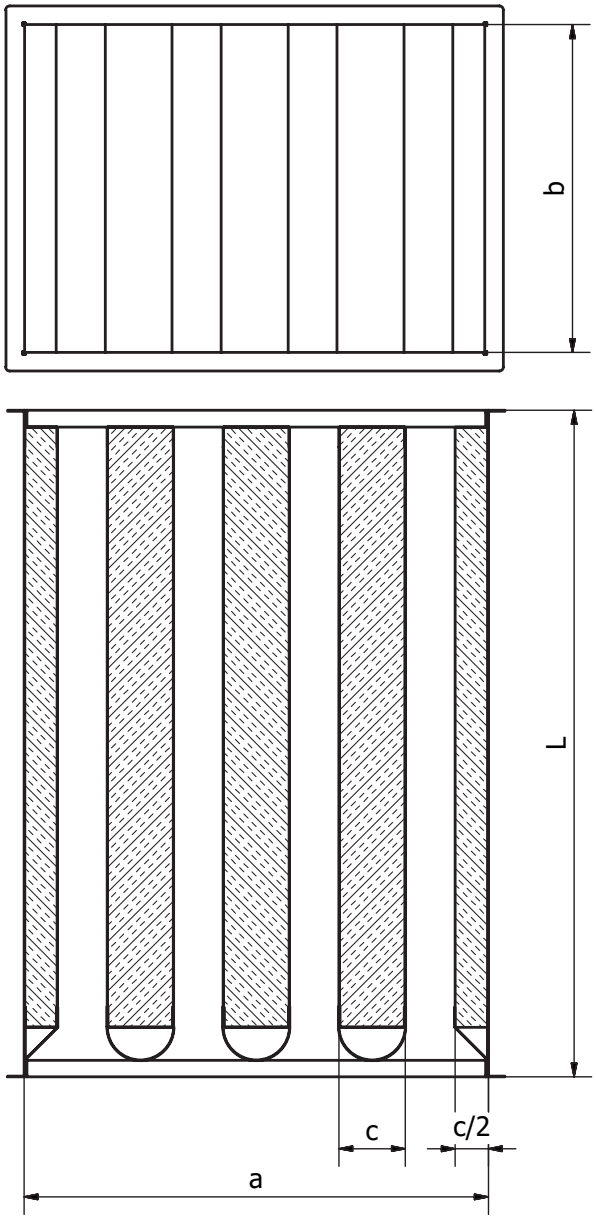

ALNOR® ventilation systems
is a registered trademark protected by a technical patent. All modification rights reserved.

Rectangular duct silencers

SLC/SRC/SPC

Description

Available materials - Product code examples

SLC-...-...-...-...-...-... - Z275 galvanized steel sheet
SLK-...-...-...-...-...-... - 1.4301/304 stainless steel sheet
SLM-...-...-...-...-...-...- 316L - 1.4404/316L stainless steel sheet
SLA-...-...-...-...-...-... - 0.8 to 1.0 mm thick aluminium sheet

Other stainless steel sheet grades: please submit a request for quotation to determine manufacturability.

Product code example:

Product code: SLC - 10 - 04 - 0800 - 0400 - 0500

Type L baffle
Type R baffle
Type P baffle
Material
c - 100 baffle thickness
c - 200 baffle thickness
Number of baffles
width a
height b
length L

Product code example:
Silencer with 100 mm thick type L baffle, 4 baffles:
SLC-100-4-0800-0400-0500

Manufacturability

Material:
Z275 galvanized steel sheet
0.8 to 1.0 mm thick aluminium sheet
1.4301 stainless steel sheet
1.4404 stainless steel sheet
Other stainless steel sheet grades: please submit a request for quotation to determine manufacturability.

Number of baffles:
Silencer with 1 baffle: 2 half-baffles at the duct sides
Silencer with 2 baffles: 1 full baffle + 2 half-baffles at the duct sides
Silencer with 3 baffles: 2 full baffles + 2 half-baffles at the duct sides
Silencer with 5 baffles: 4 full baffles + 2 half-baffles at the duct sides

Baffles:
Mineral wool: rock or glass wool; other insulators, e.g. expanded PVC or as supplied by the customer.
Baffle thickness: 40 mm to 300 mm with type N3 lining or type G9 washable lining.
Mineral wool density: 40 to 100 kg/m^3.
The baffle front breast is curved to reduce the air flow turbulence and pressure loss.

Dimensions:
PQ frames: see the standard dimensions of square ducts. Other versions are available on request.
Front-to-back baffles: stops 1 to 3 cm before the PQ angle at the edge.

Silencer baffle types

SLC
Silencer with sound-absorbing baffles - steel frame + mineral wool in lining: This baffle type is generally used for sound insulation at low and medium frequencies.



SRC
Silencer with perforated sound-absorbing resonator baffles - steel frame + mineral wool in lining + ½ of baffle length covered with steel sheet: This baffle type is generally used for sound insulation at medium and high frequencies.

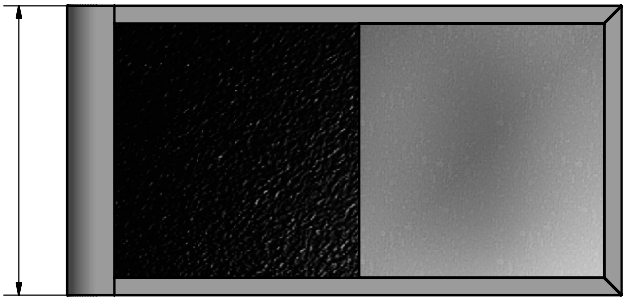

SPC
Silencer with perforated sound-absorbing resonator baffles - steel frame + mineral wool in lining + baffle covered over its entire length with perforated steel sheet at an open surface area ratio of 36%:

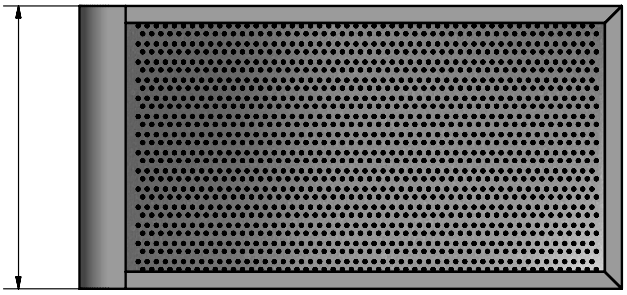

ALNOR® ventilation systems
is a registered trademark protected by a technical patent. All modification rights reserved.

Sound performance measurement of the SLC-100-3-390-490-500 silencer

Product code	Height (mm)	Baffle length (mm)	Baffle width (mm)	Flow rate in the duct (m/s)	Baffle gap flow (m/s)	Baffle gap width (mm)
SLC-100-3-390-490-500	390	500	100	2.1	10.0	40

Components:
2 middle baffles + 2 side baffles

Mean sound power level: 53.3 dB
Mean A-weighted sound power level: 37.7 dB (A)

Mean octave frequency (Hz)	Measured value (dB)	Calculated value (dB)
63	2.7	2.9
125	4.0	4.1
250	12.4	10.9
500	24.2	22.3
1000	34.5	34.9
2000	30.1	29.1
4000	19.3	20.2
8000	18.3	18.4

Table 1. Insertion loss, Test Report no. P-TA 31/2014, ref. DIN EN ISO 7235

No.	Dynamic pressure (Pa)	Volumetric flow rate (m^3/s)	Air volume in baffle gaps (m/s)	Pressure loss over substitute duct (Pa)	Pressure loss over specimen (Pa)	Resulting pressure loss (Pa)	zeta** (-)
1	0.4	0.4	10.0	1.3	27.2	25.9	0.45
2	0.5	0.5	12.0	1.7	44.1	42.4	0.51
3	0.8	0.6	15.0	2.9	68.2	65.3	0.50
4	1.5	0.8	20.0	5.5	117.8	112.3	0.48
5	2.3	1.0	25.0	8.3	186.0	177.7	0.49

Arithmetic mean zeta: 0.49
Table 6. Test Report no. P-TA 31/2014, ref. DIN EN ISO 7235

Ambient pressure: 980 hPa
Duct internal temperature: 21.2˚C
Air density: 1.16 kg/m^3

ALNOR® ventilation systems
is a registered trademark protected by a technical patent. All modification rights reserved.

4-baffle rectangular duct silencer
SLC

Sound performance measurements for the SLC-100-4-590-490-1500 silencer

Product code	Height (mm)	Baffle length (mm)	Baffle width (mm)	Flow rate in the duct (m/s)	Baffle gap flow (m/s)	Baffle gap width (mm)
SLC-100-4-590-490-1500	590	1500	100	2.1	10.0	60

Components:
3 middle baffles + 2 side baffles

Mean sound power level: 51.73 dB
Mean A-weighted sound power level: 41.3 dB (A)

Mean octave frequency (Hz)	Measured value (dB)	Calculated value (dB)
63	2.7	2.9
125	4.0	4.1
250	12.4	10.9
500	24.2	22.3
1000	34.5	34.9
2000	30.1	29.1
4000	19.3	20.2
8000	18.3	18.4

Table 1. Insertion loss, Test Report no. P-TA 31/2014, ref. DIN EN ISO 7235

No.	Dynamic pressure (Pa)	Volumetric flow rate (m^3/s)	Air volume in baffle gaps (m/s)	Pressure loss over substitute duct (Pa)	Pressure loss over specimen (Pa)	Resulting pressure loss (Pa)	zeta** (-)
1	1.8	0.9	10.0	2.9	47.2	44.3	0.78
2	2.7	1.1	12.0	4.1	68.2	64.1	0.78
3	4.2	1.3	15.0	6.4	106.2	99.8	0.78
4	7.4	1.8	20.0	11.6	181.0	169.4	0.74
5	11.6	2.2	25.0	18.8	304.0	285.2	0.80

Arithmetic mean zeta: 0.49
Table 12. Test Report no. P-TA 31/2014, ref. DIN EN ISO 7235

Ambient pressure: 965 hPa
Duct internal temperature: 21.6˚C
Air density: 1.14 kg/m^3

ALNOR® ventilation systems
is a registered trademark protected by a technical patent. All modification rights reserved.

Sound performance measurements for the SLC-100-3-470-490-500 silencer

Product code	Height (mm)	Baffle length (mm)	Baffle width (mm)	Flow rate in the duct (m/s)	Baffle gap flow (m/s)	Baffle gap width (mm)
SLC-100-3-470-490-500	470	500	100	3.8	10.0	90

Components:
2 middle baffles + 2 side baffles

Mean sound power level: 56.2 dB
Mean A-weighted sound power level: 47.3 dB (A)

Mean octave frequency (Hz)	Measured value (dB)	Calculated value (dB)
63	2.7	2.9
125	4.0	4.1
250	12.4	10.9
500	24.2	22.3
1000	34.5	34.9
2000	30.1	29.1
4000	19.3	20.2
8000	18.3	18.4

Table 1. Insertion loss, Test Report no. P-TA 31/2014, ref. DIN EN ISO 7235

No.	Dynamic pressure (Pa)	Volumetric flow rate (m^3/s)	Air volume in baffle gaps (m/s)	Pressure loss over substitute duct (Pa)	Pressure loss over specimen (Pa)	Resulting pressure loss (Pa)	zeta** (-)
1	1.8	0.9	10.0	3.8	36.9	33.1	0.59
2	2.6	1.1	12.0	5.5	53.8	48.3	0.59
3	4.1	1.4	15.0	8.6	84.5	75.9	0.60
4	7.3	1.8	20.0	14.1	144.0	129.9	0.57
5	11.5	2.3	25.0	25.6	235.0	209.4	0.59

Arithmetic mean zeta: 0.59
Table 18. Test Report no. P-TA 31/2014, ref. DIN EN ISO 7235

Ambient pressure: 955 hPa
Duct internal temperature: 21.6˚C
Air density: 1.13 kg/m^3

ALNOR® ventilation systems
is a registered trademark protected by a technical patent. All modification rights reserved.

5-baffle rectangular duct silencer
SLC

Sound performance measurements for the SLC-100-5-830-490-500 silencer

Product code	Height (mm)	Baffle length (mm)	Baffle width (mm)	Flow rate in the duct (m/s)	Baffle gap flow (m/s)	Baffle gap width (mm)
SLC-100-5-830-490-500	830	500	100	3.9	10.0	80

Components:
4 middle baffles + 2 side baffles

Mean sound power level: 52.2 dB
Mean A-weighted sound power level: 44.8 dB (A)

Mean octave frequency (Hz)	Measured value (dB)	Calculated value (dB)
63	2.7	2.9
125	4.0	4.1
250	12.4	10.9
500	24.2	22.3
1000	34.5	34.9
2000	30.1	29.1
4000	19.3	20.2
8000	18.3	18.4

Table 1. Insertion loss, Test Report no. P-TA 31/2014, ref. DIN EN ISO 7235

No.	Dynamic pressure (Pa)	Volumetric flow rate (m^3/s)	Air volume in baffle gaps (m/s)	Pressure loss over substitute duct (Pa)	Pressure loss over specimen (Pa)	Resulting pressure loss (Pa)	zeta** (-)
1	5.9	1.6	10.0	5.9	32.2	26.3	0.45
2	8.6	1.9	12.0	8.7	47.3	38.6	0.46
3	13.4	2.4	15.0	14.1	78.8	64.7	0.50
4	23.8	3.2	20.0	25.8	128.0	102.2	0.44
5	37.1	4.0	25.0	40.6	204.0	163.4	0.45

Arithmetic mean zeta: 0.46
Table 24. Test Report no. P-TA 31/2014, ref. DIN EN ISO 7235

Ambient pressure: 980 hPa
Duct internal temperature: 21.6˚C
Air density: 1.16 kg/m^3

ALNOR® ventilation systems
is a registered trademark protected by a technical patent. All modification rights reserved.

4-baffle rectangular duct silencer
SLC

Sound performance measurements for the SLC-100-4-590-490-500 silencer

Product code	Height (mm)	Baffle length (mm)	Baffle width (mm)	Flow rate in the duct (m/s)	Baffle gap flow (m/s)	Baffle gap width (mm)
SLC-100-4-590-490-500	590	500	100	3.0	10.0	60

Components:
3 middle baffles + 2 side baffles

Mean sound power level: 52.2 dB
Mean A-weighted sound power level: 43.8 dB (A)

Mean octave frequency (Hz)	Measured value (dB)	Calculated value (dB)
63	2.7	2.9
125	4.0	4.1
250	12.4	10.9
500	24.2	22.3
1000	34.5	34.9
2000	30.1	29.1
4000	19.3	20.2
8000	18.3	18.4

Table 1. Insertion loss, Test Report no. P-TA 31/2014, ref. DIN EN ISO 7235

No.	Dynamic pressure (Pa)	Volumetric flow rate (m^3/s)	Air volume in baffle gaps (m/s)	Pressure loss over substitute duct (Pa)	Pressure loss over specimen (Pa)	Resulting pressure loss (Pa)	zeta** (-)
1	1.8	0.9	10.0	2.8	32.5	29.7	0.52
2	2.7	1.1	12.0	4.2	47.2	43.0	0.53
3	4.1	1.4	15.0	6.5	71.3	64.8	0.51
4	7.4	1.8	20.0	11.8	124.0	112.2	0.49
5	11.5	2.3	25.0	18.5	205.0	186.5	0.53

Arithmetic mean zeta: 0.51
Table 30. Test Report no. P-TA 31/2014, ref. DIN EN ISO 7235

Ambient pressure: 960 hPa
Duct internal temperature: 21.4˚C
Air density: 1.14 kg/m^3

ALNOR® ventilation systems
is a registered trademark protected by a technical patent. All modification rights reserved.

4-baffle rectangular duct silencer
SLC

Sound performance measurements for the SLC-100-4-510-490-500 silencer

Product code	Height (mm)	Baffle length (mm)	Baffle width (mm)	Flow rate in the duct (m/s)	Baffle gap flow (m/s)	Baffle gap width (mm)
SLC-100-4-510-490-500	510	500	100	3.9	10.0	100

Components:
3 middle baffles + 2 side baffles

Mean sound power level: 55.0 dB
Mean A-weighted sound power level: 45.1 dB (A)

Mean octave frequency (Hz)	Measured value (dB)	Calculated value (dB)
63	2.7	2.9
125	4.0	4.1
250	12.4	10.9
500	24.2	22.3
1000	34.5	34.9
2000	30.1	29.1
4000	19.3	20.2
8000	18.3	18.4

Table 1. Insertion loss, Test Report no. P-TA 31/2014, ref. DIN EN ISO 7235

No.	Dynamic pressure (Pa)	Volumetric flow rate (m^3/s)	Air volume in baffle gaps (m/s)	Pressure loss over substitute duct (Pa)	Pressure loss over specimen (Pa)	Resulting pressure loss (Pa)	zeta** (-)
1	2.3	1.0	10.0	4.2	31.2	27.0	0.47
2	3.3	1.2	12.0	6.3	43.4	37.1	0.45
3	5.1	1.5	15.0	9.1	69.5	60.4	0.47
4	9.1	2.0	20.0	16.3	117.0	100.7	0.44
5	14.2	2.5	25.0	27.5	201.0	173.5	0.49

Arithmetic mean zeta: 0.47
Table 36. Test Report no. P-TA 31/2014, ref. DIN EN ISO 7235

Ambient pressure: 960 hPa
Duct internal temperature: 21.1˚C
Air density: 1.14 kg/m^3

ALNOR® ventilation systems
is a registered trademark protected by a technical patent. All modification rights reserved.

Sound performance measurements for the SLC-100-6-1100-490-500 silencer

Product code	Height (mm)	Baffle length (mm)	Baffle width (mm)	Flow rate in the duct (m/s)	Baffle gap flow (m/s)	Baffle gap width (mm)
SLC-100-6-1100-490-500	1100	500	100	4.4	10.0	100

Components:
5 middle baffles + 2 side baffles

Mean sound power level: 52.0 dB
Mean A-weighted sound power level: 44.9 dB (A)

Mean octave frequency (Hz)	Measured value (dB)	Calculated value (dB)
63	2.7	2.9
125	4.0	4.1
250	12.4	10.9
500	24.2	22.3
1000	34.5	34.9
2000	30.1	29.1
4000	19.3	20.2
8000	18.3	18.4

Table 1. Insertion loss, Test Report no. P-TA 31/2014, ref. DIN EN ISO 7235

No.	Dynamic pressure (Pa)	Volumetric flow rate (m^3/s)	Air volume in baffle gaps (m/s)	Pressure loss over substitute duct (Pa)	Pressure loss over specimen (Pa)	Resulting pressure loss (Pa)	zeta** (-)
1	14.4	2.5	10.0	13.2	37.5	24.3	0.42
2	20.7	3.0	12.0	18.0	51.8	33.8	0.41
3	32.3	3.8	15.0	28.1	76.0	47.9	0.37
4	57.5	5.0	20.1	49.1	133.0	83.9	0.36
5	89.8	6.3	25.1	76.9	217.0	140.1	0.39

Arithmetic mean zeta: 0.39
Table 42. Test Report no. P-TA 31/2014, ref. DIN EN ISO 7235

Ambient pressure: 967 hPa
Duct internal temperature: 21.6˚C
Air density: 1.14 kg/m^3

ALNOR® ventilation systems
is a registered trademark protected by a technical patent. All modification rights reserved.

4-baffle rectangular duct silencer
SLC

Sound performance measurements for the SLC-200-4-1100-490-500 silencer

Product code	Height (mm)	Baffle length (mm)	Baffle width (mm)	Flow rate in the duct (m/s)	Baffle gap flow (m/s)	Baffle gap width (mm)
SLC-200-4-1100-490-500	1100	500	200	2.5	10.0	95

Components:
3 middle baffles + 2 side baffles

Mean sound power level: 52.2 dB
Mean A-weighted sound power level: 41.8 dB (A)

Mean octave frequency (Hz)	Measured value (dB)	Calculated value (dB)
63	2.7	2.9
125	4.0	4.1
250	12.4	10.9
500	24.2	22.3
1000	34.5	34.9
2000	30.1	29.1
4000	19.3	20.2
8000	18.3	18.4

Table 1. Insertion loss, Test Report no. P-TA 31/2014, ref. DIN EN ISO 7235

No.	Dynamic pressure (Pa)	Volumetric flow rate (m^3/s)	Air volume in baffle gaps (m/s)	Pressure loss over substitute duct (Pa)	Pressure loss over specimen (Pa)	Resulting pressure loss (Pa)	zeta** (-)
1	4.7	1.4	10.0	3.9	41.1	37.2	0.65
2	6.7	1.7	12.0	5.6	58.4	52.8	0.64
3	10.6	2.1	15.0	9.7	91.6	81.9	0.63
4	18.7	2.9	20.0	16.8	168.0	151.2	0.66
5	29.3	3.6	25.0	25.5	261.0	235.5	0.65

Arithmetic mean zeta: 0.64
Table 48. Test Report no. P-TA 31/2014, ref. DIN EN ISO 7235

Ambient pressure: 975 hPa
Duct internal temperature: 21.6˚C
Air density: 1.15 kg/m^3

ALNOR® ventilation systems
is a registered trademark protected by a technical patent. All modification rights reserved.

4-baffle rectangular duct silencer
SLC

Sound performance measurements for the SLC-200-4-1140-490-1500 silencer

Product code	Height (mm)	Baffle length (mm)	Baffle width (mm)	Flow rate in the duct (m/s)	Baffle gap flow (m/s)	Baffle gap width (mm)
SLC-200-4-1140-490-1500	1140	1500	200	3.0	10.0	110

Components:
3 middle baffles + 2 side baffles

Mean sound power level: 51.0 dB
Mean A-weighted sound power level: 39.8 dB (A)

Mean octave frequency (Hz)	Measured value (dB)	Calculated value (dB)
63	2.7	2.9
125	4.0	4.1
250	12.4	10.9
500	24.2	22.3
1000	34.5	34.9
2000	30.1	29.1
4000	19.3	20.2
8000	18.3	18.4

Table 1. Insertion loss, Test Report no. P-TA 31/2014, ref. DIN EN ISO 7235

No.	Dynamic pressure (Pa)	Volumetric flow rate (m^3/s)	Air volume in baffle gaps (m/s)	Pressure loss over substitute duct (Pa)	Pressure loss over specimen (Pa)	Resulting pressure loss (Pa)	zeta** (-)
1	6.2	1.6	10.0	5.2	57.7	52.5	0.92
2	8.9	2.0	12.0	7.7	81.9	74.2	0.91
3	14.0	2.5	15.0	12.4	126.0	113.6	0.88
4	24.9	3.3	20.0	22.1	231.0	208.9	0.91
5	38.9	4.1	25.0	34.1	358.0	323.9	0.91

Arithmetic mean zeta: 0.91
Table 54. Test Report no. P-TA 31/2014, ref. DIN EN ISO 7235

Ambient pressure: 967 hPa
Duct internal temperature: 21.6˚C
Air density: 1.14 kg/m^3

ALNOR® ventilation systems
is a registered trademark protected by a technical patent. All modification rights reserved.

2-baffle rectangular duct silencer
SLC

Sound performance measurements for the SLC-200-2-470-490-500 silencer

Product code	Height (mm)	Baffle length (mm)	Baffle width (mm)	Flow rate in the duct (m/s)	Baffle gap flow (m/s)	Baffle gap width (mm)
SLC-200-2-470-490-500	470	500	200	1.3	10.0	30

Components:
1 middle baffle + 2 side baffles

Mean sound power level: 50.3 dB
Mean A-weighted sound power level: 36.8 dB (A)

Mean octave frequency (Hz)	Measured value (dB)	Calculated value (dB)
63	2.7	2.9
125	4.0	4.1
250	12.4	10.9
500	24.2	22.3
1000	34.5	34.9
2000	30.1	29.1
4000	19.3	20.2
8000	18.3	18.4

Table 1. Insertion loss, Test Report no. P-TA 31/2014, ref. DIN EN ISO 7235

No.	Dynamic pressure (Pa)	Volumetric flow rate (m^3/s)	Air volume in baffle gaps (m/s)	Pressure loss over substitute duct (Pa)	Pressure loss over specimen (Pa)	Resulting pressure loss (Pa)	zeta** (-)
1	0.2	0.3	10.0	0.4	23.3	22.9	0.41
2	0.3	0.4	12.0	0.6	36.1	35.6	0.44
3	0.5	0.5	15.0	0.8	56.8	56.0	0.44
4	0.8	0.6	20.0	1.6	101.0	99.4	0.44
5	1.3	0.8	25.0	2.5	158.0	155.5	0.44

Arithmetic mean zeta: 0.43
Table 60. Test Report no. P-TA 31/2014, ref. DIN EN ISO 7235

Ambient pressure: 955 hPa
Duct internal temperature: 21.1˚C
Air density: 1.13 kg/m^3

ALNOR® ventilation systems
is a registered trademark protected by a technical patent. All modification rights reserved.

Rectangular silencer baffles

K-SLC/K-SRC/K-SPC



Description

The K-SLC / K-SRC / K-SPC baffles are intended for installation inside square ducts when fabricating a ducted silencer. When installed according to the arrangement of the SLC silencer, the baffles provide the same sound insulation performance. The baffles can be installed during the assembly of the main ventilation ducts or after the installation of the whole ductwork by removing the relevant ductwork sections. The baffles are installed by inserting, aligning and fastening them with WGO self-drilling screws.

Available materials - Product code examples

K-SL… - sound-absorbing baffle
K-SR… - sound-absorbing resonator baffle
K-SP… - perforated sound-absorbing resonator baffle
C - galvanized steel sheet
A - aluminium sheet
K - 1.4301 stainless steel sheet
M - 1.4404 stainless steel sheet
CO - copper sheet
P - half-baffle; asymmetric breast profile
G - baffle with type G9 washable lining
100 - full baffle width

Product code example:

Product code: K-SLC - P - - 100 - 600 - 500

Type L baffle
Type R baffle
Type P baffle
Material
Half-baffle
G9-lined baffle
Full baffle width
height
length

Baffle types

K-SLC

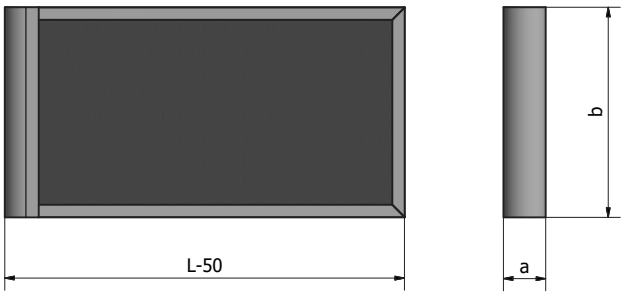

The solid sound-absorbing baffle is made of mineral wool with type N3 lining. The entire baffle is open, except for the galvanized steel frame.
Sound-insulating baffles available on request:

- with washable lining
- with aluminium, stainless steel (various grades) or copper frames
- other sound insulator densities, from 40 to 100 kg/m³ - manufacturable with possible deviations of the sound insulation performance.

The silencer sides are always lined with the K-SLC half-baffle with only a part of it lined with glass fibre, and the rounded breast ends at the side wall.

K-SRC

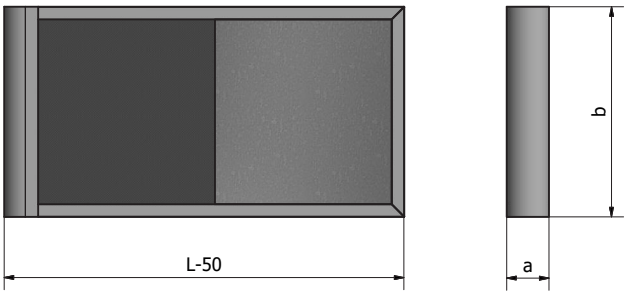

The sound-proofing resonator baffle has one half of the length clad in steel sheet on both sides. See the K-SLC specifications for the sound insulator density, materials and half-baffles. The baffle is installed inside the duct with self-drilling screws or rivets; as a result, a ducted silencer can be fabricated.

ALNOR® ventilation systems
is a registered trademark protected by a technical patent. All modification rights reserved.

Rectangular silencer baffles

K-SLC/K-SRC/K-SPC

Baffle types

K-SPC

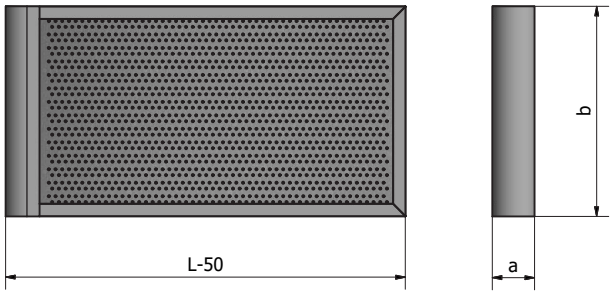

The perforated sound-proofing resonator baffle is clad in perforated sheet on both sides (and one side only for half-baffles). The open surface area ratio of the perforation is 36%. All the other structural parts are identical to the K-SLC and form a silencer when installed in a square duct.

Important! Half-baffles, e.g. K-SLC-P, is $^{1}/_{2}$ wide as the standard baffle and intended for installation at the ducted silencer side wall:
The K-SLC-P-100 is 50 mm wide.
The K-SLC-P-200 is 100 mm wide.

K-SLC-P

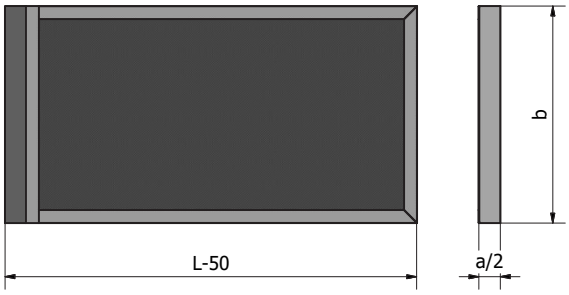

ALNOR® ventilation systems
is a registered trademark protected by a technical patent. All modification rights reserved.

Flexible ducts

ALNOR reserves the right to modify technical specifications in line with the policy of continuous product improvement.

ALNOR® ventilation systems
is a registered trademark protected by a technical patent. All modification rights reserved.

System description

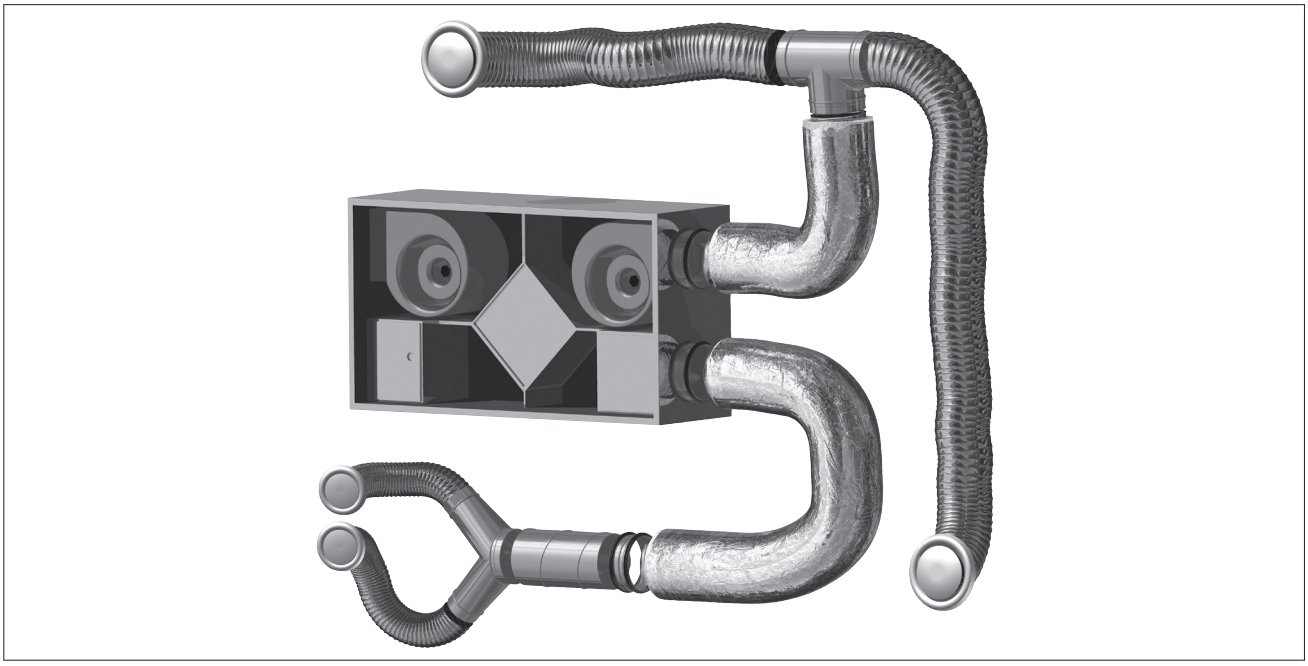

System description

Flexible ducts complement the ventilation ductwork. Flexible ducts are a good solution for building connections between rigid ducts made from metal sheets and air supply diffusers or plenum boxes. They can also be used to output hot air from a fireplace firebox to an air heating ductwork system, or for building heat recovery systems.

Dimensions

The flexible ducts are designed for the high sizing range of round ventilation components to facilitate assembly of a ventilation system. The flexible ducts are available in 3, 5 and 10 metre long sections (measured for a fully stretched section).

Marking

ALNOR products carry the Polish conformity mark B for construction products and product codes as shown in the technical specifications listed in this catalogue.

Application advantages

The ducts are flexible; as such, they can be easily installed in hard-to-reach parts of building or whenever it is difficult to exactly lay out the connections of plenum boxes beneath a suspended ceiling. The 10 metre long flexible ducts reduce the time to connect short ductwork stretches. The 120-cm long boxes ensure easy handling and storage of flexible ducts. The 25-mm thick mineral wool insulation and the perforated inner tube allow using flexible ducts as ducted silencers.

Installation instructions

When trimming a flexible duct, the cladding must be first cut with a knife or scissors. Next, the cladding needs to be cut along the inner spiral over one turn of its coil. Finally, the coil needs to be cut off with pliers at the trimmed edge. The trimmed duct edge is then put over a fitting or an air supply diffuser, fixed in place with a TKS band clip, and the outer cladding of the flexible duct needs to be sealed along the joint with a sealing tape.

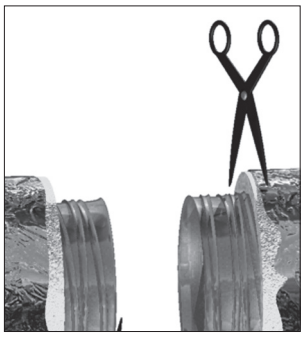

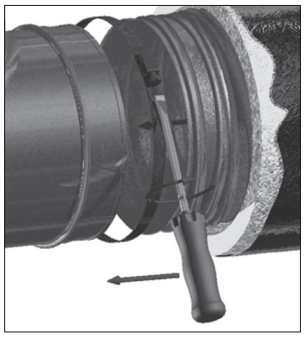

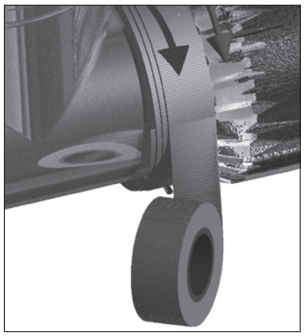

The ALUDUCT AD-L, ALUDUCT AD-3, SONODUCT AD-L, SONODUCT PE AD-L, and IZODUCT AD-3 flexible ventilation ducts are provided with the PZH-NIH Hygiene Certificate no. HK/B/0100/01/2009.

ALNOR® ventilation systems
is a registered trademark protected by a technical patent. All modification rights reserved.

Semi-flexible aluminium duct

AF-AL



Description

ALNOR FLEX ducts are made from 60-mm wide aluminium foil strip spiral coils. The ducts are designed for flexible connections between specific ventilation system components, e.g. the main ventilation ducts and plenum boxes. They can also be used for hot air exhaust connections between fireplace fireboxes and for building air heating ductwork.

Packaging: 3-metre sections compressed to 1000 – 1300 mm.
Flexibility: The minimum duct bending radius is 1.5 times the duct diameter (R = 1.5D)

Temperature range: -30˚C to +250˚C
Max. humidity: 95%

Maximum acceptable static pressure: 2000 Pa
Maximum acceptable static vacuum: 1000 Pa

Flow rate:
Recommended operating velocity: max. 7 m/s
Maximum flow velocity: 25 m/s

Fire resistance: non-flammable

Available materials - Product code example
AF-AL-...- aluminium sheet

Product code example
Product code: **AF-AL - aaa - bbbb**

type
Ød
lenght

Dimensions

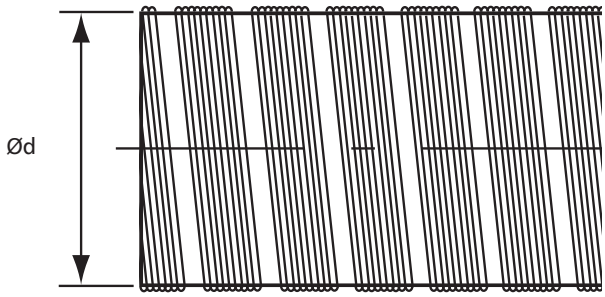

$Ød_{1\ nom}$ (mm)	$Ød_{2\ nom}$ (mm)	Length L (mm)	Weight (kg)
80	83	3000	0.34
85	88	3000	0.36
90	93	3000	0.38
100	103	3000	0.42
110	113	3000	0.47
115	118	3000	0.49
120	123	3000	0.51
125	128	3000	0.53
130	133	3000	0.55
133	136	3000	0.57
135	138	3000	0.58
140	143	3000	0.59
150	154	3000	0.63
160	164	3000	0.68
180	184	3000	0.76
200	204	3000	0.90
250	254	3000	1.13
300	304	3000	1.35
315	319	3000	1.42
355	359	3000	1.60
400	406	3000	1.80
450	456	3000	2.14
500	506	3000	2.25

ALNOR® ventilation systems
is a registered trademark protected by a technical patent. All modification rights reserved.

Semi-flexible stainless steel duct

AF-SN



Description

STAL FLEX ducts are made by coiling 60 mm-wide stainless steel strips. This flexible duct type is designed for building ventilation ducts which require resistance to high temperature and chemicals, and flexible connections with the equipment and components of the ventilation system. The ducts can also be used for connecting gas stoves in fireplace air heating systems.

Packaging: 3-metre sections
Flexibility: The minimum duct bending radius is 2.5 times the duct diameter (R = 1.5D)

Temperature range: -30˚C to +500˚C
Max. humidity: 95%

Maximum acceptable static pressure: 2000 Pa
Maximum acceptable static vacuum: 1000 Pa

Flow rate:
Recommended operating velocity: max. 7 m/s
Maximum flow velocity: 25 m/s

Fire resistance: non-flammable

Available materials - Product code example
AF-SN-...- 1.4404/316L - stainless steel sheet

Product code example
Product code: **AF-SN - aaa - bbbb**

type
Ød
lenght

Dimensions

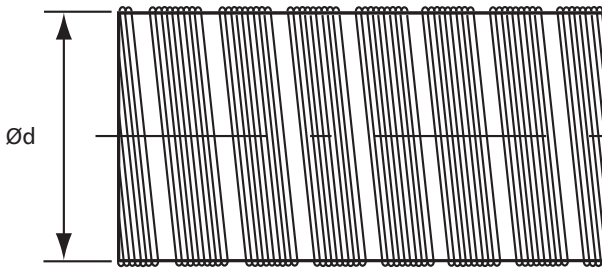

$Ød_{1\ nom}$ (mm)	$Ød_{2\ nom}$ (mm)	Length L (mm)
80	83	3000
85	88	3000
90	93	3000
100	103	3000
110	113	3000
115	118	3000
120	123	3000
125	128	3000
130	133	3000
133	136	3000
135	138	3000
140	143	3000
150	154	3000
160	164	3000
180	184	3000
200	204	3000
224	228	3000
250	254	3000
300	304	3000
315	319	3000
355	359	3000
400	404	3000

ALNOR® ventilation systems
is a registered trademark protected by a technical patent. All modification rights reserved.

AF-AL, AF-SN

Technical specifications

Straight-line pressure drop chart

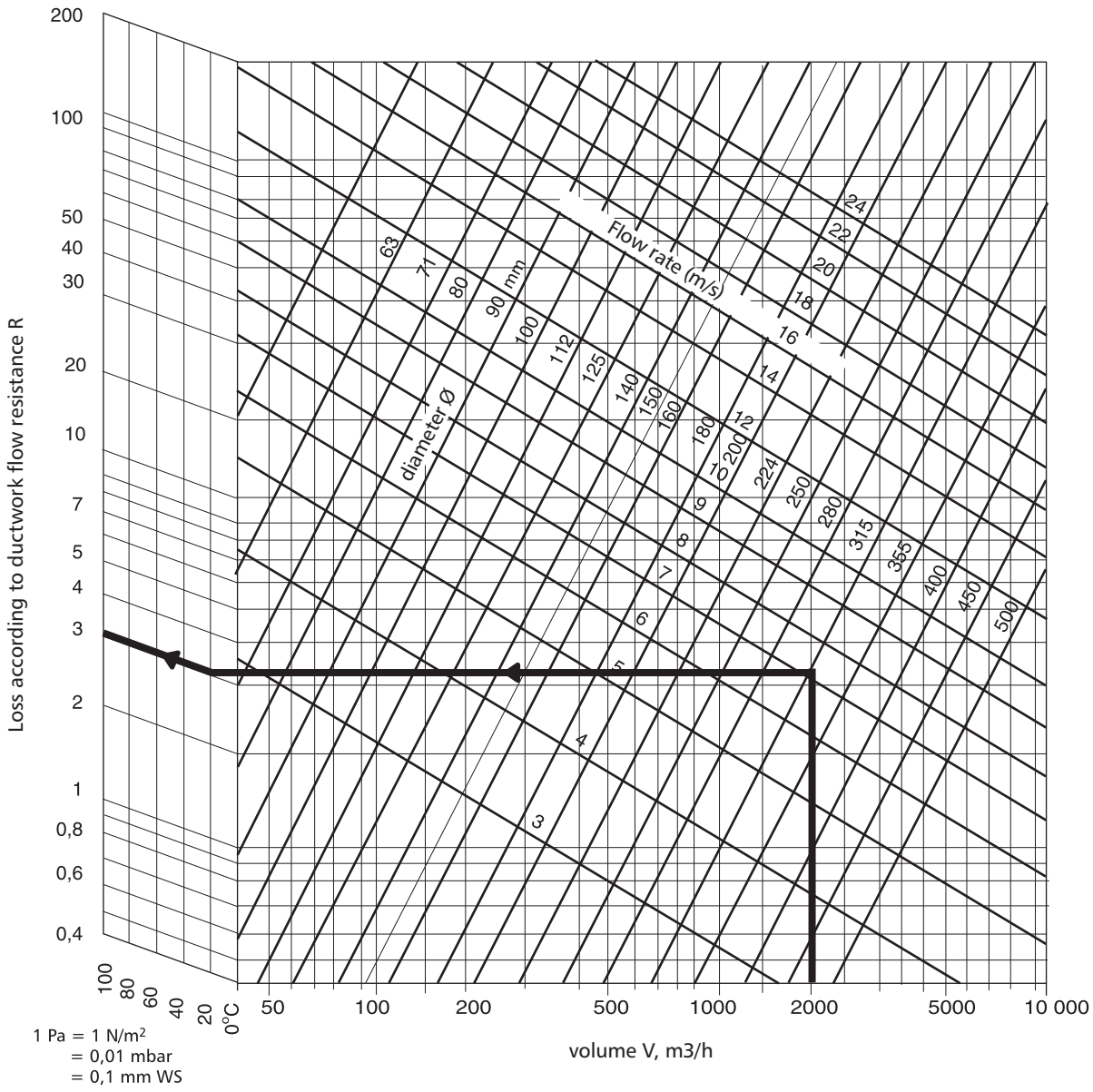

1 Pa = 1 N/m²
= 0,01 mbar
= 0,1 mm WS

ALNOR® ventilation systems
is a registered trademark protected by a technical patent. All modification rights reserved.

ALNOR®FLEX/STAL®FLEX ventilation ducts

AF-AL, AF-SN

Technical specifications

Pressure drop chart for 90° and 45° ductwork bends

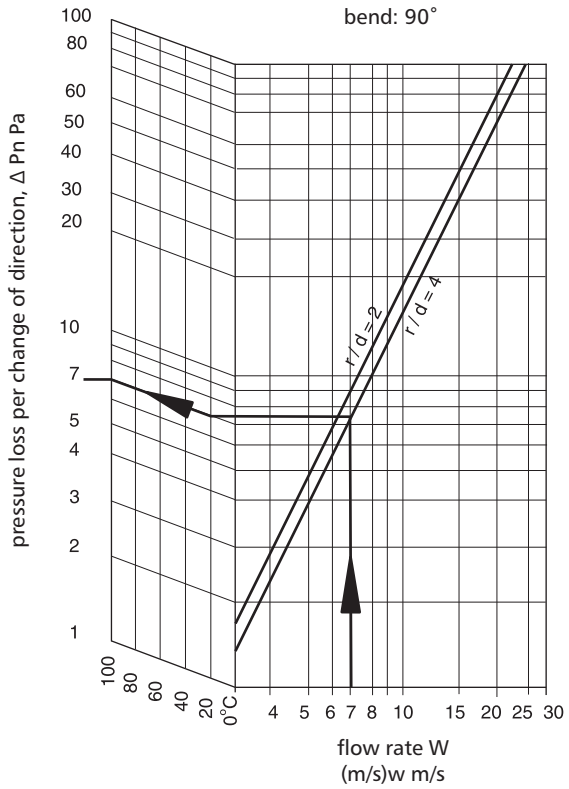

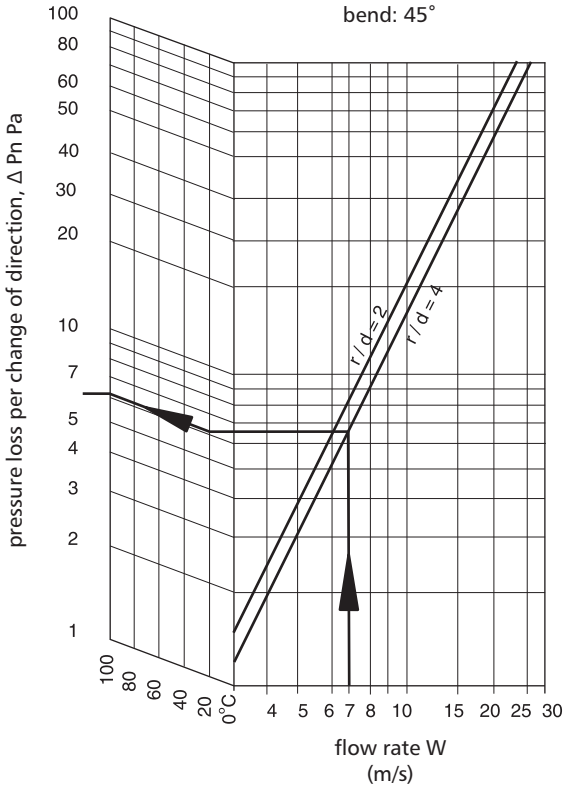

1 Pa = 1 N/m²
= 0,01 mbar
= 0,1 mm WS

Noise level in ALNOR®FLEX and STAL®FLEX ducts, standard diameters from 100 mm to 300 mm

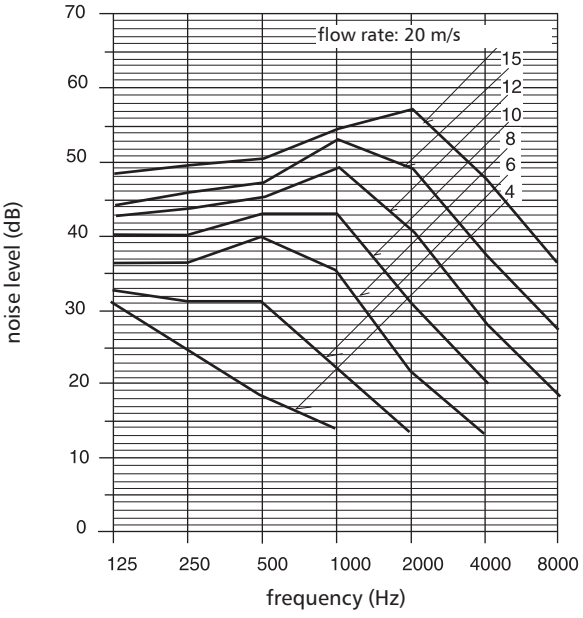

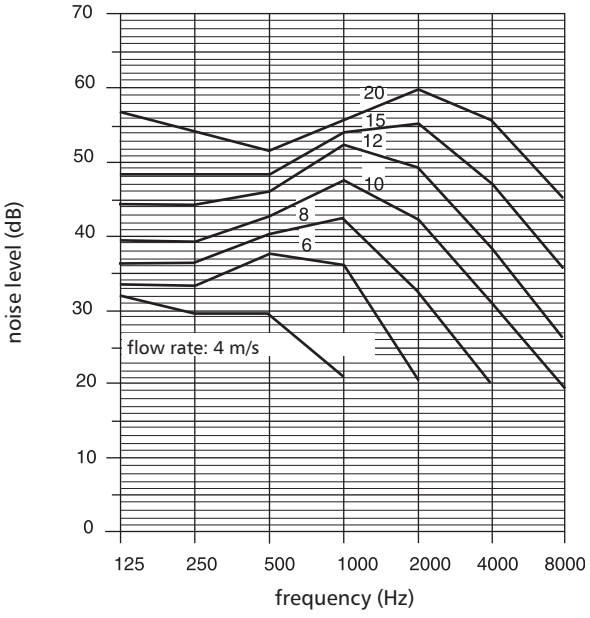

Noise level in ALNOR®FLEX and STAL®FLEX ducts
Straight run

Noise level in ALNOR®FLEX and STAL®FLEX ducts
Bend, 90°, r = d

ALNOR® ventilation systems
is a registered trademark protected by a technical patent. All modification rights reserved.

Flexible aluminium ventilation duct

ALAD-L



Description

Aluduct AD-L flexible ducts are made from aluminium polyester foil and reinforced with a helical coil of steel wire for better stiffness and shape stability. This product is recommended for all ventilation systems which require flexible connections between individual components. It is most often used for connecting ductwork to plenum boxes and air valves. It is also a popular option for building air exhaust lines which require no thermal or sound insulation.

Packaging: 10 metre sections compressed to 600 mm and packed in cardboard boxes.

Flexibility (winding diameter): Depends on the actual duct diameter, i.e. ca. 0.6D (mm).

Temperature range: -20˚C to +140˚C.

Maximum acceptable vacuum: Depending on the duct routing. For straight runs, 1/3 of the pressure transferred at the specific diameter can be taken.

Fire classification references: 0982.4/11/Z00NPU

Available materials - Product code example
ALAD-L-...- AW-1050A H24 aluminium sheet

Product code example
Product code: **ALAD-L - aaa - bbbb**

type
Ød$_1$
lenght

Dimensions

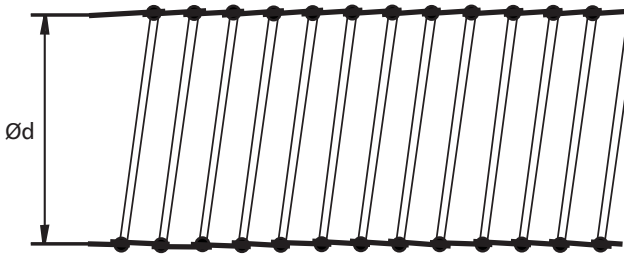

Ød$_{1\ nom}$ (mm)	Ød out. (mm)	Max. acceptable pressure (Pa)	Tolerance (mm)
80	82,0	2500	+ 1.5
100	102,0	2500	+ 1.5
125	127,0	2500	+ 1.5
140	140,0	2500	+ 1.5
150	152,0	2500	+ 1.5
160	160,0	2500	+ 2.0
180	180,0	2500	+ 2.0
200	203,0	2500	+ 2.0
225	229,0	2500	+ 2.0
250	254,0	2500	+ 3.0
280	280,0	2500	+ 3.0
300	305,0	2500	+ 3.0
315	315,0	2500	+ 3.0
355	355,0	2500	+ 3.0
400	406,0	2500	+ 4.0
450	457,0	2500	+ 4.0
500	508,0	2500	+ 4.0
560	568,0	2500	+ 4.0
630	638,0	2500	+ 4.0
710	718,0	2500	+ 4.0
800	810,0	2500	+ 4.0

ALNOR® ventilation systems
is a registered trademark protected by a technical patent. All modification rights reserved.

High-temperature flexible aluminium duct

ALAD-3



Description

Aluduct AD-3 flexible ducts are made from aluminium polyester foil and reinforced with a helical coil of steel wire for better stiffness and shape stability. This product is recommended for ventilation systems which require flexible connections between components and temperature resistance up to 250˚C. It is most often used for connecting ductwork to plenum boxes and air valves. It is also a popular option for building air exhaust lines which require no thermal or sound insulation.

Packaging: 10 metre sections compressed to 800mm and packed in cardboard boxes.

Flexibility (winding diameter): Depends on the actual duct diameter, i.e. ca. 0.6D (mm).

Temperature range: -30˚C to +250˚C

Maximum acceptable vacuum:
Depending on the duct routing. For straight runs, 1/3 of the pressure transferred at the specific diameter can be taken.

Available materials - Product code example
ALAD-3-...- AW-1050A H24 aluminium sheet

Product code example
Product code: **ALAD-3 - aaa - bbbb**

type
Ød$_1$
lenght

Dimensions

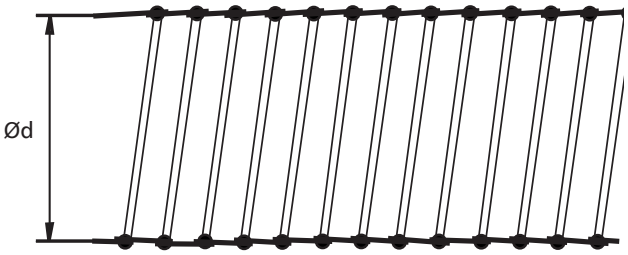

Ød$_{1\ nom}$ (mm)	Ød out. (mm)	Max. acceptable pressure (Pa)	Tolerance (mm)
80	82,0	3000	+ 1.5
100	102,0	3000	+ 1.5
125	127,0	3000	+ 1.5
140	140,0	3000	+ 1.5
150	152,0	3000	+ 1.5
160	160,0	3000	+ 2.0
180	180,0	3000	+ 2.0
200	203,0	3000	+ 2.0
225	229,0	3000	+ 2.0
250	254,0	3000	+ 3.0
280	280,0	3000	+ 3.0
300	305,0	3000	+ 3.0
315	315,0	3000	+ 3.0
355	355,0	3000	+ 3.0
400	406,0	3000	+ 4.0
450	457,0	3000	+ 4.0
500	508,0	3000	+ 4.0
560	568,0	2500	+ 4.0
630	638,0	2500	+ 4.0
710	718,0	2500	+ 4.0
800	810,0	2500	+ 4.0

ALNOR® ventilation systems
is a registered trademark protected by a technical patent. All modification rights reserved.

ALUDUCT flexible ventilation ducts

ALAD-L, ALAD-3

Technical specifications

Straight-line pressure drop chart

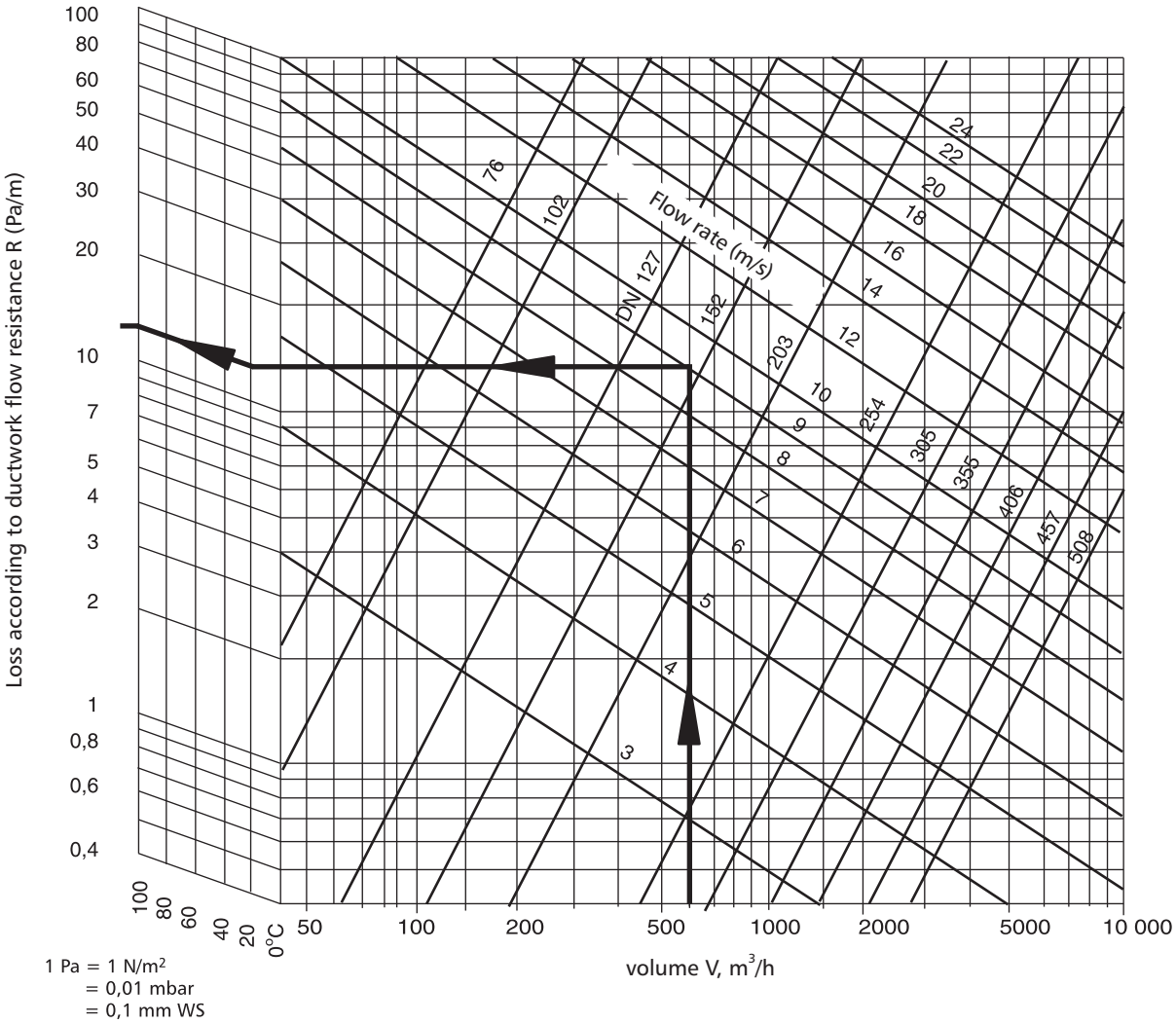

1 Pa = 1 N/m²
= 0,01 mbar
= 0,1 mm WS

ALNOR® ventilation systems
is a registered trademark protected by a technical patent. All modification rights reserved.

High-temperature flexible bactericidal duct

ALAD-HY-3



Description

ALAD-HY-3 flexible ducts are made from multi-layered aluminium polyester foil. All ALAD-HY-3 ducts have an internal bactericidal liner and a reinforcement made from a helical steel spring wire coil. The ALAD-HY-3 flexible ducts prevent the growth of harmful bacteria, fungi and mould inside the ventilation.
The ALAD-HY-3 flexible ducts are recommended for ventilation and A/C systems.

Packaging: 10 metre sections packed in cardboard boxes.

Flexibility (winding diameter): Depends on the actual duct diameter, i.e. ca. 0.6D (mm).

Temperature range: -30˚C to +180˚C

Maximum acceptable vacuum: Depending on the duct routing. For straight runs, 1/3 of the pressure transferred at the specific diameter can be taken.

Available materials - Product code example
ALAD-HY-3-...- AW-1050A H24 aluminium sheet

Product code example
Product code: **ALAD-HY-3 - aaa - bbbb**

type
Ød
lenght

Dimensions

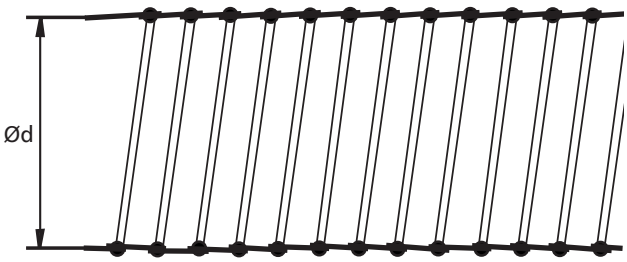

$Ød_{nom}$ (mm)	Ød out. (mm)	Max. acceptable pressure (Pa)	Tolerance (mm)
100	102,0	3000	+ 1.5
125	127,0	3000	+ 1.5
140	140,0	3000	+ 1.5
150	152,0	3000	+ 2.0
160	160,0	3000	+ 2.0
180	180,0	3000	+ 2.0
200	203,0	3000	+ 2.0
250	254,0	3000	+ 3.0
315	315,0	3000	+ 3.0
355	355,0	3000	+ 3.0
400	406,0	3000	+ 4.0
450	457,0	3000	+ 4.0
500	508,0	3000	+ 4.0

ALNOR® ventilation systems
is a registered trademark protected by a technical patent. All modification rights reserved.

Flexible bactericidal duct

ALAD-HY-L



Description

ALAD-HY-L flexible ducts are made from multi-layered aluminium-polyester laminate. All ALAD-HY-L ducts have an internal bactericidal liner and a reinforcement made from a helical steel spring wire coil. The ALAD-HY-L flexible ducts prevent the growth of harmful bacteria, fungi and mould inside the ventilation.

The ALAD-HY-L flexible ducts are recommended for ventilation and A/C systems.

Packaging: 10 metre sections packed in cardboard boxes.

Flexibility (winding diameter): Depends on the actual duct diameter, i.e. ca. 0.6D (mm).

Temperature range: -30˚C to +150˚C

Maximum acceptable vacuum: Depending on the duct routing. For straight runs, 1/3 of the pressure transferred at the specific diameter can be taken.

Available materials - Product code example
ALAD-HY-L-...- AW-1050A H24 aluminium sheet

Product code example

Product code: **ALAD-HY-L - aaa - bbbb**

type
Ød
lenght

Dimensions

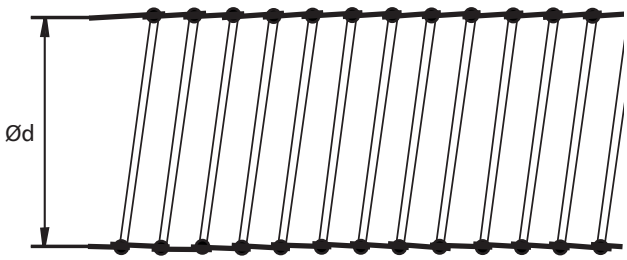

Ød 1 nom (mm)	*Ød out. (mm)*	*Max. acceptable pressure (Pa)*	*Tolerance (mm)*
100	102,0	3000	+ 1.5
125	127,0	3000	+ 1.5
140	140,0	3000	+ 1.5
150	152,0	3000	+ 2.0
160	160,0	3000	+ 2.0
180	180,0	3000	+ 2.0
200	203,0	3000	+ 2.0
250	254,0	3000	+ 3.0
315	315,0	3000	+ 3.0
355	355,0	3000	+ 3.0
400	406,0	3000	+ 4.0
450	457,0	3000	+ 4.0
500	508,0	3000	+ 4.0

ALNOR® ventilation systems
is a registered trademark protected by a technical patent. All modification rights reserved.

Thermal & sound-insulated flexible duct

ALSD-L



Description

Sonoduct AD-L thermal-insulated ducts protects air against heat loss inside the ventilation ductwork. The perforation improves the sound-insulating performance of this duct model. The product is based on the standard Aluduct and includes a 25 or 50 mm thick insulation with aluminium polyester cladding. It is generally intended for building connections for plenum boxes, air valves, or high-air-flow heat recovery ventilation systems.

Packaging: 10 metre sections compressed to 1200 mm and packed in cardboard boxes.
Flexibility (winding diameter): Depends on the actual duct outer diameter, i.e. ca. 0.75D (mm).
Temperature range: -30˚C to +140˚C
Maximum acceptable vacuum: Depending on the duct routing. For straight runs, 1/3 of the pressure transferred at the specific diameter can be taken.
Sound insulation: See the enclosed diagram.
Non-perforated version available on request.
IZODUCT AD-L ALID-L
Fire classification references: 2839.2/11/Z00NP

Available materials - Product code example
ALSD-L-...-...- AW-1050A H24 aluminium sheet

Product code example
Product code: **ALSD-L - aaa - bbb - cccc**

type
insulation thickness
$Ød_1$
lenght

Dimensions

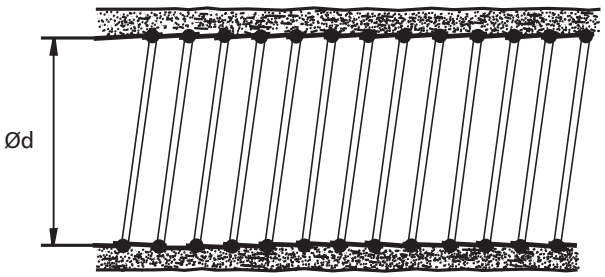

$Ød_{1\ nom}$ (mm)	Ød out. (mm)	Max. acceptable pressure (Pa)	Tolerance (mm)
80	82.0	2000	+ 1.5
100	102.0	2000	+ 1.5
125	127.0	2000	+ 1.5
140	140.0	2000	+ 1.5
150	152.0	2000	+ 1.5
160	160.0	2000	+ 2.0
180	180.0	2000	+ 2.0
200	203.0	2000	+ 2.0
225	229.0	2000	+ 2.0
250	254.0	2000	+ 3.0
280	280.0	2000	+ 3.0
300	305.0	2000	+ 3.0
315	315.0	2000	+ 3.0
355	355.0	2000	+ 3.0
400	406.0	2000	+ 3.0
450	457.0	2000	+ 3.0
500	508.0	2000	+ 3.0
560	568.0	2500	+ 4.0
630	638.0	2500	+ 4.0
710	718.0	2500	+ 4.0
800	810.0	2500	+ 4.0

ALNOR® ventilation systems
is a registered trademark protected by a technical patent. All modification rights reserved.

Thermal & sound-insulated flexible duct with vapour proof membrane

ALSD-PE-L



Description

Similarly to the Sonoduct AD-L, this model is based on the standard version of the Aluduct combined with thermal and sound insulation, and intended for building mechanical and heat recovery ventilation systems. An added feature which makes this model stand out from the flexible ducts is the vapour barrier film laid between the inner ducts and the mineral wool insulation. The vapour barrier keeps all condensate resulting from temperature differences away from the mineral wool to keep it dry; otherwise, humidity might reduce the sound and thermal insulating performance of the material.



Caution!
The vapour barrier is not seamless along the circumference. At high volumes, some condensate may penetrate the insulating layer.

Packaging: 10 metre sections compressed to 1200 mm and packed in cardboard boxes.
Flexibility (winding diameter): Depends on the actual duct outer diameter, i.e. ca. 0.75D (mm).
Temperature range: -20˚C to +140˚C
Maximum acceptable vacuum: Depending on the duct routing. For straight runs, 1/3 of the pressure transferred at the specific diameter can be taken.
Fire classification references: 2839.4/11/Z00NP and 2839.6/11/Z00NP

Available materials - Product code example
ALSD-PE-L-...-...-...- AW-1050A H24 aluminium sheet

Product code example
Product code: **ALSD-PE-L - aaa - bbb - cccc**

type
insulation thickness
$Ød_1$
lenght

Dimensions

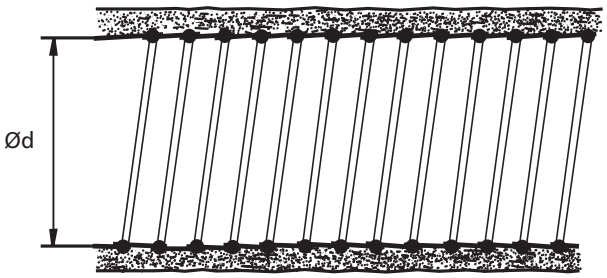

$Ød_{1\ nom}$ (mm)	Ød out. (mm)	Max. acceptable pressure (Pa)	Tolerance (mm)
80	82.0	2000	+ 1.5
100	102.0	2000	+ 1.5
125	127.0	2000	+ 1.5
140	140.0	2000	+ 1.5
150	152.0	2000	+ 1.5
160	160.0	2000	+ 2.0
180	180.0	2000	+ 2.0
200	203.0	2000	+ 2.0
225	229.0	2000	+ 2.0
250	254.0	2000	+ 3.0
280	280.0	2000	+ 3.0
300	305.0	2000	+ 3.0
315	315.0	2000	+ 3.0
355	355.0	2000	+ 3.0
400	406.0	2000	+ 3.0
450	457.0	2000	+ 3.0
500	508.0	2000	+ 3.0
560	568.0	2500	+ 4.0
630	638.0	2500	+ 4.0
710	718.0	2500	+ 4.0
800	810.0	2500	+ 4.0

ALNOR® ventilation systems
is a registered trademark protected by a technical patent. All modification rights reserved.

Thermal & sound-insulated flexible duct for fireplace systems

ALSD-3



Description

The Sonouct AD-3 is identical in design to the AD-L, except for the inner cladding. The outer cladding is a duct resistant to the maximum temperature of 250˚C; this makes it perfect for fireplace hot air distribution systems and for all ventilation systems with a maximum air temperature of 250˚C.

Packaging: 10 metre sections compressed to 1200 mm and packed in cardboard boxes, and 5 metre sections compressed to 600 mm and packed in cardboard boxes.
Flexibility (winding diameter): Depends on the actual duct outer diameter, i.e. ca. 0.80D (mm).
Temperature range: -30˚C to +250˚C
Maximum acceptable vacuum: Depending on the duct routing. For straight runs, 1/3 of the pressure transferred at the specific diameter can be taken.
Sound insulation: See the enclosed diagram.
Non-perforated version available on request.
IZODUCT AD-3 ALID-3
Fire classification references: 2839.1/11/Z00NP

Available materials - Product code example
ALSD-3-...-...-...- AW-1050A H24 aluminium sheet

Product code example
Product code: **ALSD-3 - aaa - bbb - cccc**

type
insulation thickness
$Ød_1$
lenght

Dimensions

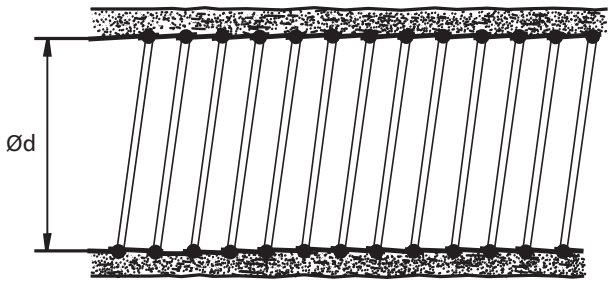

$Ød_{1\ nom}$ (mm)	Ød out. (mm)	Max. acceptable pressure (Pa)	Tolerance (mm)
80	82,0	2000	+ 1.5
100	102,0	2000	+ 1.5
125	127,0	2000	+ 1.5
140	140,0	2000	+ 1.5
150	152,0	2000	+ 1.5
160	160,0	2000	+ 2.0
180	180,0	2000	+ 2.0
200	203,0	2000	+ 2.0
225	229,0	2000	+ 2.0
250	254,0	2000	+ 3.0
280	280,0	2000	+ 3.0
300	305,0	2000	+ 3.0
315	315,0	2000	+ 3.0
355	355,0	2000	+ 3.0
400	406,0	2000	+ 3.0
450	457,0	2000	+ 3.0
500	508,0	2000	+ 3.0
560	568,0	2500	+ 4.0
630	638,0	2500	+ 4.0
710	718,0	2500	+ 4.0
800	810,0	2500	+ 4.0

ALNOR® ventilation systems
is a registered trademark protected by a technical patent. All modification rights reserved.

Thermal & sound-insulated flexible ventilation duct

ALSDL-L



Description

Sonolight AD-L thermal-insulated ducts protect air against heat loss inside the ventilation ductwork. The perforation improves the sound-insulating performance of this duct model. The product is based on the standard Aluduct and includes a 25 or 50 mm thick insulation with aluminium polyester cladding. It is generally intended for building connections for plenum boxes, air valves, or high-air-flow heat recovery ventilation systems.

Packaging: 10 metre sections compressed to 1200 mm and packed in cardboard boxes.

Flexibility (winding diameter): Depends on the actual duct outer diameter, i.e. ca. 0.75D (mm).

Temperature range: -30 °C to +120 °C

Maximum acceptable vacuum: Depending on the duct routing. For straight runs, 1/3 of the pressure transferred at the specific diameter can be taken.

Sound insulation: See the enclosed diagram.

Non-perforated version available on request.
IZOLIGHT AD-L ALIDL-L

Fire classification references: 2839.3/11/Z00NP

Available materials - Product code example
ALSDL-L-...-...-...- AW-1050A H24 aluminium sheet

Product code example
Product code: **ALSDL-L - aaa - bbb - cccc**

type
insulation thickness
$Ød_1$
lenght

Dimensions

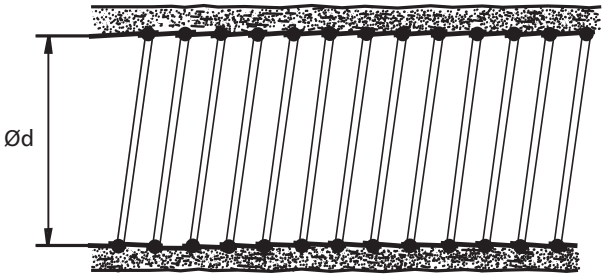

$Ød_{1\ nom}$ (mm)	Ød out. (mm)	Max. acceptable pressure (Pa)	Tolerance (mm)
80	82.0	2000	+ 1.5
100	102.0	2000	+ 1.5
125	127.0	2000	+ 1.5
140	140.0	2000	+ 1.5
150	152.0	2000	+ 1.5
160	160.0	2000	+ 2.0
180	180.0	2000	+ 2.0
200	203.0	2000	+ 2.0
225	229.0	2000	+ 2.0
250	254.0	2000	+ 3.0
280	280.0	2000	+ 3.0
300	305.0	2000	+ 3.0
315	315.0	2000	+ 3.0
355	355.0	2000	+ 3.0
400	406.0	2000	+ 3.0
450	457.0	2000	+ 3.0
500	508.0	2000	+ 3.0

ALNOR® ventilation systems
is a registered trademark protected by a technical patent. All modification rights reserved.

Thermal & sound-insulated flexible duct with vapour proof membrane

ALSDL-PE-L



Description

Similarly to the Sonolight AD-L, this model is based on the standard version of the Aluduct combined with thermal and sound insulation, and intended for building mechanical and heat recovery ventilation systems. An added feature which makes this model stand out from the flexible ducts is the vapour barrier film laid between the inner ducts and the mineral wool insulation. The vapour barrier keeps all condensate resulting from temperature differences away from the mineral wool to keep it dry; otherwise, humidity might reduce the sound and thermal insulating performance of the material.



Caution!
The vapour barrier is not seamless along the circumference. At high volumes, some condensate may penetrate the insulating layer.

Packaging: 10 metre sections compressed to 1200 mm and packed in cardboard boxes.
Flexibility (winding diameter): Depends on the actual duct outer diameter, i.e. ca. 0.80D (mm).
Temperature range: -30˚C to +120˚C
Maximum acceptable vacuum: Depending on the duct routing. For straight runs, 1/3 of the pressure transferred at the specific diameter can be taken.
Sound insulation: See the enclosed diagram.
Fire classification references: 2839.5/11/Z00NP and 2839.7/11/Z00NP

Available materials - Product code example
ALSDL-PE-L-...-...-...- AW-1050A H24 aluminium sheet

Product code example
Product code: **ALSDL-PE-L - aaa - bbb - cccc**

type
insulation thickness
$Ød_1$
lenght

Dimensions

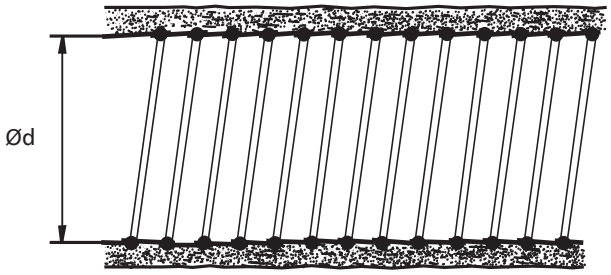

$Ød_{1\ nom}$ (mm)	Ød out. (mm)	Max. acceptable pressure (Pa)	Tolerance (mm)
80	82,0	2000	+ 1.5
100	102,0	2000	+ 1.5
125	127,0	2000	+ 1.5
140	140,0	2000	+ 1.5
150	152,0	2000	+ 1.5
160	160,0	2000	+ 2.0
180	180,0	2000	+ 2.0
200	203,0	2000	+ 2.0
225	229,0	2000	+ 2.0
250	254,0	2000	+ 3.0
280	280,0	2000	+ 3.0
300	305,0	2000	+ 3.0
315	315,0	2000	+ 3.0
355	355,0	2000	+ 3.0
400	406,0	2000	+ 3.0
450	457,0	2000	+ 3.0
500	508,0	2000	+ 3.0

ALNOR® ventilation systems
is a registered trademark protected by a technical patent. All modification rights reserved.

Technical specifications

Sound insulation performance charts
The charts show the noise levels for the SONODUCT and SONOLIGHT thermal and sound insulated ducts in relation to the duct section length sizes of 500 mm, 1000 mm and 1500 mm with the sound insulation thickness of ca. 25 mm.

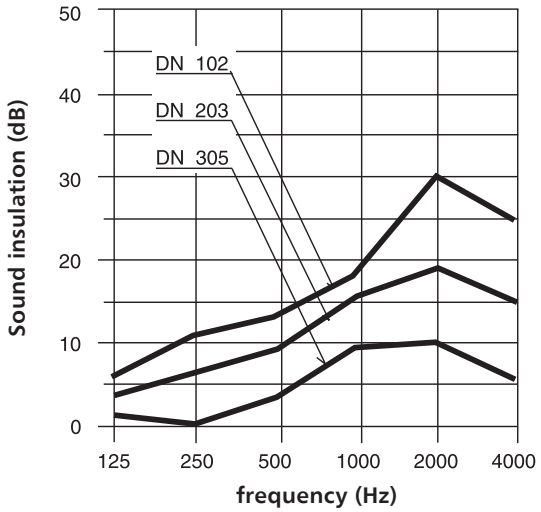

Chart 1: Noise levels in SONODUCT/SONOLIGHT
Sound insulation thickness: 25 mm
Duct section length: 500 mm

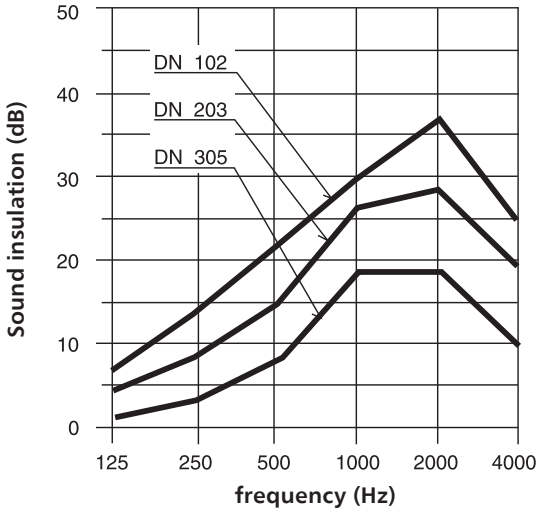

Chart 2: Noise levels in SONODUCT/SONOLIGHT
Sound insulation thickness: 25 mm
Duct section length: 1000 mm

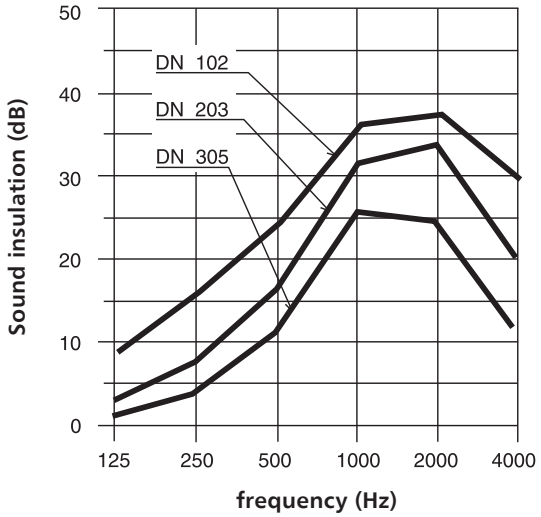

Chart 3: Noise levels in SONODUCT/SONOLIGHT
Sound insulation thickness: 25 mm
Duct section length: 1500 mm

ALNOR® ventilation systems
is a registered trademark protected by a technical patent. All modification rights reserved.

Technical specifications

Flow resistance chart for IZODUCT/IZOLIGHT ducts

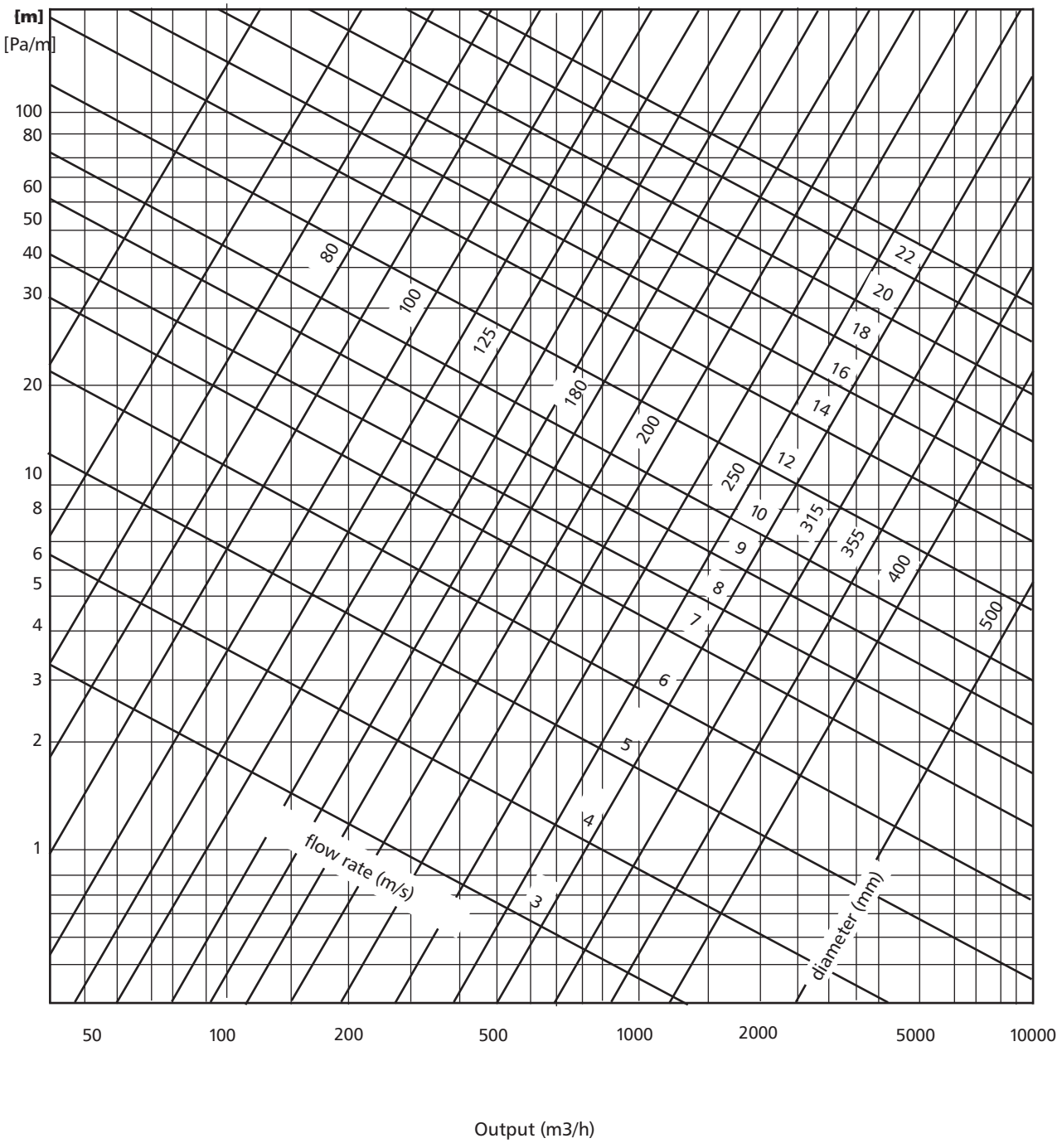

ALNOR® ventilation systems
is a registered trademark protected by a technical patent. All modification rights reserved.

Flexible plastic duct

POAD



Description

POLYDUCT flexible ducts are made of 30 µm multi-layered polyester. The duct structure is reinforced by a helical spring steel wire coil. The POLYDUCT is recommended for ventilation and A/C systems, as well as air heating systems. The biggest advantages of this model are a budget-level price and high mechanical strength; the duct can be always moved or rerouted when reconnecting plenum boxes, air supply diffusers or air exhaust valves.

Packaging: 10 metre sections packed in cardboard boxes.

Flexibility (winding diameter): Depends on the actual duct diameter, i.e. ca. 0.6D (mm).

Temperature range: -30˚C to +120˚C

Maximum acceptable vacuum: Depending on the duct routing. For straight runs, 1/3 of the pressure transferred at the specific diameter can be taken.

Product code example

Product code: **POAD - aaa - bbbb**

type
Ød
lenght

Dimensions

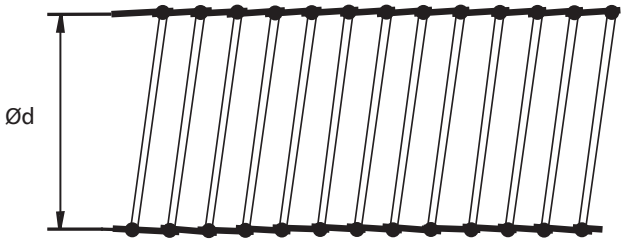

$Ød_{nom}$ (mm)	Ød out. (mm)	Max. acceptable pressure (Pa)	Tolerance (mm)
80	82,0	3000	+ 1.5
100	102,0	3000	+ 1.5
125	127,0	3000	+ 1.5
140	140,0	3000	+ 1.5
150	152,0	3000	+ 1.5
160	160,0	3000	+ 2.0
180	185,0	3000	+ 2.0
200	203,0	3000	+ 2.0
224	229,0	3000	+ 3.0
250	254,0	3000	+ 3.0
280	280,0	3000	+ 3.0
300	305,0	3000	+ 3.0
355	356,0	3000	+ 4.0
450	457,0	3000	+ 4.0
500	508,0	3000	+ 4.0
560	560,0	3000	+ 4.0

ALNOR® ventilation systems
is a registered trademark protected by a technical patent. All modification rights reserved.

POLYIZODUCT insulated ventilation ducts

POID



Description

This flexible duct model features thermal insulation based on 25 or 50 mm thick mineral wool. The inner cladding is made of two-ply 30 µm polyester film. The outer cladding is made of two-ply 30 µm polyester film with metallized finish. Between the inner cladding and the insulation there is a polyester vapour barrier film. The inner cladding is reinforced with a helical steel spring wire coil.

Packaging: 10 metre sections packed in cardboard boxes.

Flexibility (winding diameter): Depends on the actual duct diameter, i.e. from 0.8D to 1.5D (mm).

Temperature range: -30˚C to +120˚C

Maximum acceptable vacuum: Depending on the duct routing. For straight runs, 1/3 of the pressure transferred at the specific diameter can be taken.

Product code example

Product code: **POID - aaa - bbb - cccc**

type
insulation thickness
Ød$_1$
lenght

Dimensions

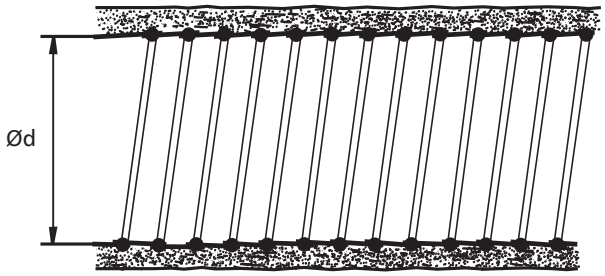

Ød$_{nom}$ (mm)	Ød out. (mm)	Max. acceptable pressure (Pa)	Tolerance (mm)
80	82,0	3000	+ 1.5
100	102,0	3000	+ 1.5
125	127,0	3000	+ 1.5
140	140,0	3000	+ 1.5
150	152,0	3000	+ 1.5
160	160,0	3000	+ 2.0
180	185,0	3000	+ 2.0
200	203,0	3000	+ 2.0
225	229,0	3000	+ 2.0
250	254,0	3000	+ 3.0
280	280,0	3000	+ 3.0
300	305,0	3000	+ 3.0
315	315,0	3000	+ 3.0
355	356,0	3000	+ 3.0
400	406,0	3000	+ 3.0
450	457,0	3000	+ 3.0
500	508,0	3000	+ 3.0
560	560,0	3000	+ 3.0

ALNOR® ventilation systems
is a registered trademark protected by a technical patent. All modification rights reserved.

High-temperature insulated bactericidal duct

ALID-HY-3



Description

ALID-HY-3 are flexible ventilation ducts with 25 mm thick mineral wool insulation. The inner and outer cladding are made from multi-layered aluminium polyester foil. The inner cladding features an internal bactericidal liner and a reinforcement made from a helical spring steel wire coil.
The ALID-HY-3 insulated flexible ducts prevent the growth of harmful bacteria, fungi and mould inside the ventilation. The ALID-HY-3 insulated flexible ducts are recommended for ventilation and A/C systems.

Packaging: 10 metre sections packed in cardboard boxes.

Flexibility (winding diameter): Depends on the actual duct diameter, i.e. from 0.8D to 1.1D (mm).

Temperature range: -30˚C to +180˚C

Maximum acceptable vacuum: Depending on the duct routing. For straight runs, 1/3 of the pressure transferred at the specific diameter can be taken.

Available materials - Product code example
ALID-HY-3-...-...-....- AW-1050A H24 aluminium sheet

Product code example
Product code: **ALID-HY-3 - aaa - bbb - cccc**

type
insulation thickness
$Ød_1$
lenght

Dimensions

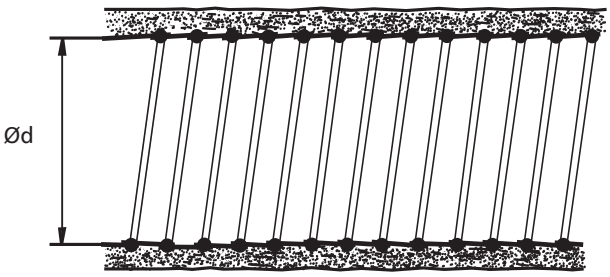

$Ød_{nom}$ (mm)	Ød out. (mm)	Max. acceptable pressure (Pa)	Tolerance (mm)
100	102.0	3000	+ 1.5
125	127.0	3000	+ 1.5
150	152.0	3000	+ 2.0
160	160.0	3000	+ 2.0
200	203.0	3000	+ 2.0
250	254.0	3000	+ 3.0
315	315.0	3000	+ 3.0
355	355.0	3000	+ 3.0
400	406.0	3000	+ 4.0
450	457.0	3000	+ 4.0
500	508.0	3000	+ 4.0

ALNOR® ventilation systems
is a registered trademark protected by a technical patent. All modification rights reserved.

Insulated flexible bactericidal duct

ALID-HY-L



Description

ALID-HY-L are flexible ventilation ducts with 25 mm thick mineral wool insulation. The inner and outer cladding are made from multi-layered aluminium polyester foil. The inner cladding features an internal bactericidal liner and a reinforcement made from a helical spring steel wire coil.
The ALAD-HY-L flexible ducts prevent the growth of harmful bacteria, fungi and mould inside the ventilation as a result of the bactericidal coating of silver ions which are odourless, abrasion- and damage-resistant. The ALID-HY-L insulated flexible ducts are recommended for ventilation and A/C systems.

Packaging: 10 metre sections packed in cardboard boxes.

Flexibility (winding diameter): Depends on the actual duct diameter, i.e. from 0.8D to 1.1D (mm).

Temperature range: -30˚C to +150˚C

Maximum acceptable vacuum: Depending on the duct routing. For straight runs, 1/3 of the pressure transferred at the specific diameter can be taken.

Available materials - Product code example
ALID-HY-L-...-...-....- AW-1050A H24 aluminium sheet

Product code example
Product code: **ALID-HY-L - aaa - bbb - cccc**

type
insulation thickness
Ød$_1$
lenght

Dimensions

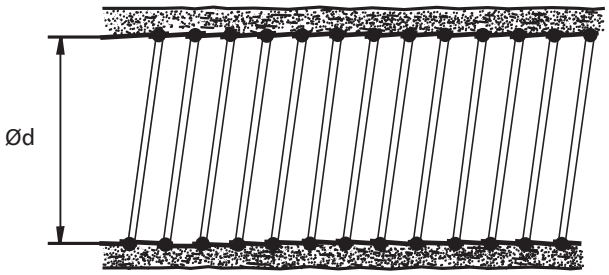

Ød$_{nom}$ (mm)	Ød out. (mm)	Max. acceptable pressure (Pa)	Tolerance (mm)
100	102.0	3000	+ 1.5
125	127.0	3000	+ 1.5
150	152.0	3000	+ 2.0
160	160.0	3000	+ 2.0
200	203.0	3000	+ 2.0
250	254.0	3000	+ 3.0
315	315.0	3000	+ 3.0
355	355.0	3000	+ 3.0
400	406.0	3000	+ 4.0
450	457.0	3000	+ 4.0
500	508.0	3000	+ 4.0

ALNOR® ventilation systems
is a registered trademark protected by a technical patent. All modification rights reserved.

Flexible plastic duct

PVC-A



Description

PVC-A flexible ducts are designed for HVAC (heating, ventilation, air conditioning and/or cooling) systems.
The PVC-A flexible ducts are made of heavy-duty PVC film reinforced with a spring wire coil. The PVC-A is so flexible that it can be easily adapted to round, oval or square ducts.
The material of the duct is UV-resistant and easily withstands repeated bending and flexing.
The PVC grade applied in this product also resists humidity and flooding with water.

Packaging: 6 and 10 metre long sections are packed into cardboard boxes.

Flexibility (winding diameter): Depends on the actual duct diameter, i.e. ca. 0.6D (mm).

Temperature range: -30˚C to +80˚C

Maximum acceptable vacuum: Depending on the duct routing. For straight runs, 1/3 of the pressure transferred at the specific diameter can be taken.

Product code example

Product code: **PVC-A - aaa - bbbb**

type
Ød
lenght

Dimensions

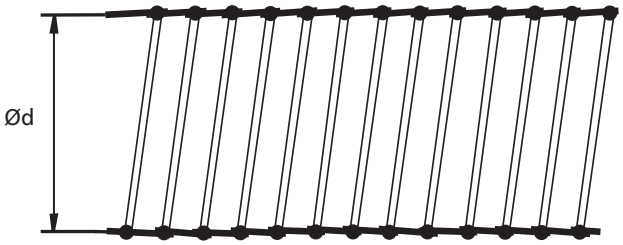

$Ød_{nom}$ (mm)	Ød out. (mm)	Max. acceptable pressure (Pa)	Tolerance (mm)
80	82.0	3000	+ 1.5
100	102.0	3000	+ 1.5
125	127.0	3000	+ 1.5
150	152.0	3000	+ 1.5
160	160.0	3000	+ 2.0
180	185.0	3000	+ 2.0
200	203.0	3000	+ 2.0
225	229.0	3000	+ 3.0
250	254.0	3000	+ 3.0
300	305.0	3000	+ 3.0
315	315.0	3000	+ 3.0
355	356.0	3000	+ 3.0
400	406.0	3000	+ 4.0
450	457.0	3000	+ 4.0
500	508.0	3000	+ 4.0
560	568.0	3000	+ 4.0
630	638.0	3000	+ 4.0
710	718.0	3000	+ 4.0
800	810.0	3000	+ 4.0

ALNOR® ventilation systems
is a registered trademark protected by a technical patent. All modification rights reserved.

COMBIFLEX flexible ventilation ducts

COM-F



Description

COMBIFLEX ducts are made from multi-layered aluminium foil in a hermetic and non-flammable 110-micron PVC cladding. The duct structure is reinforced with a helical steel spring wire coil. A great advantage of this product is that humidity does not condense on its surfaces. The COMBIFLEX is easy to clean and resists UV light and chemicals.
The COMBIFLEX is recommended for building ductwork in ventilation, A/C and air heating systems.

Packaging: 10 metre sections packed in cardboard boxes.

Flexibility (winding diameter): Depends on the actual duct diameter, i.e. ca. 0.6D (mm).

Temperature range: -30°C to +150°C

Maximum acceptable vacuum: Depending on the duct routing. For straight runs, 1/3 of the pressure transferred at the specific diameter can be taken.

Available materials - Product code example
COM-F-...-....- AW-1050A H24 aluminium sheet

Product code example
Product code: **COM-F - aaa - bbbb**

type
Ød$_1$
lenght

Dimensions

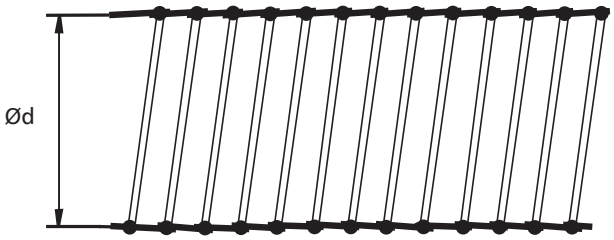

Ød$_{1\ nom}$ (mm)	Ød out. (mm)	Max. acceptable pressure (Pa)	Tolerance (mm)
80	82.0	3000	+ 1.5
100	102.0	3000	+ 1.5
125	127.0	3000	+ 1.5
150	152.0	3000	+ 1.5
160	160.0	3000	+ 2.0
180	185.0	3000	+ 2.0
200	203.0	3000	+ 2.0
225	229.0	3000	+ 2.0
250	254.0	3000	+ 3.0
300	305.0	3000	+ 3.0
315	315.0	3000	+ 3.0
355	356.0	3000	+ 3.0
400	406.0	3000	+ 4.0
450	457.0	3000	+ 4.0
500	508.0	3000	+ 4.0

ALNOR® ventilation systems
is a registered trademark protected by a technical patent. All modification rights reserved.

Flexible PVC ventilation ducts

PVC-R-DUCT, PVC-S-DUCT



Description

Round and square PVC ducts are made from 60 micron PVC film and reinforced with coiled steel wire. This duct type can be used in air heating, cooling, ventilation and/or A/C systems. The ducts can be used in low to medium pressure systems. The high flexibility makes this product perfect for ductwork systems exposed to continuous vibration.

Packaging: 1, 3 or 6 metre sections compressed and packed in plastic film.

Flexibility (winding diameter): Depends on the actual duct diameter, i.e. ca. 0.6D (mm).

Temperature range: -20˚C to +70˚C

Max. pressure: The maximum acceptable operating pressure is 2000 Pa.

Product code example

Product code: **PVC-R-DUCT - aaa - bbb**

type
Ød
length

Dimensions

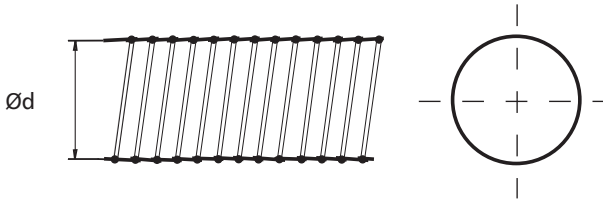

Product code	Ød (mm)	$Ød_{out}$ (mm)	Length (m)	Max. acceptable pressure (Pa)
PVC-R-DUCT-100-0100	100	102	1	2000
PVC-R-DUCT-100-0300	100	102	3	2000
PVC-R-DUCT-100-0600	100	102	6	2000
PVC-R-DUCT-125-0100	125	127	1	2000
PVC-R-DUCT-125-0300	125	127	3	2000
PVC-R-DUCT-125-0600	125	127	6	2000
PVC-R-DUCT-150-0100	150	152	1	2000
PVC-R-DUCT-150-0300	150	152	3	2000
PVC-R-DUCT-150-0600	150	152	6	2000

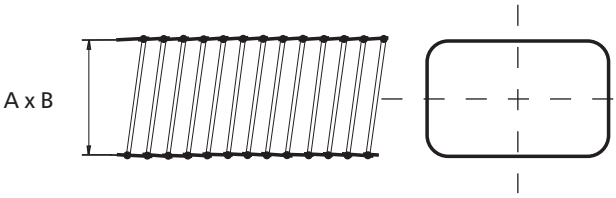

Product code	Dimensions A x B (mm)	Dimensions A_{out} x B_{out} (mm)	Length (m)	Max. acceptable pressure (Pa)
PVC-S-DUCT-55-110-0100	55x110	57x112	1	2000
PVC-S-DUCT-55-110-0300	55x110	57x112	3	2000
PVC-S-DUCT-55-110-0600	55x110	57x112	6	2000
PVC-S-DUCT-75-150-0100	75x150	77x152	1	2000
PVC-S-DUCT-75-150-0300	75x150	77x152	3	2000
PVC-S-DUCT-75-150-0600	75x150	77x152	6	2000

ALNOR® ventilation systems
is a registered trademark protected by a technical patent. All modification rights reserved.

Round duct insulating sleeve

SLVD-25/SLVD-50



Description

The sleeves feature thermal insulation made from 25 or 50 mm thick mineral wool. The cladding is made from class M1 aluminium and polyester material. The product is available in 10 metre sections, which makes it a very low-cost solutions which enables quick installation of insulation for round pipes, even with many bend fittings. The sections can be trimmed to size with a sharp utility knife.
The version with an inner PET liner below the insulating layer makes it easier to put the sleeve on a duct without any risk of pulling or ripping the mineral wool. The PET liner can be left in place or fully removed if the duct air is expected to exceed 60˚C.

Packaging:
10 metre sections in reels packed in plastic bags.
Temperature range: -30˚C to +150˚C

Available materials - Product code example

SLVD-25 - 25 mm mineral wool insulation + alu/poly cladding, 45 micron thick
SLVD-PE-25 - PET film + 25 mm mineral kwool insulation + alu/poly cladding,45 micron thick
SLVD-50 - 50 mm mineral wool insulation + alu/poly cladding, 45 micron thick
SLVD-PE-50 - PET film + 50 mm mineral wool insulation + alu/poly cladding,45 micron thick

Product code example

Product code: **SLVD - aaa - bbb - cccc**

type
insulation thickness
Ød$_1$
lenght

Dimensions

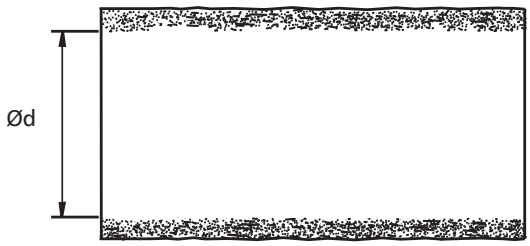

Ød$_{1\ nom}$ (mm)	Ød out. (mm)
80	82.0
100	102.0
125	127.0
140	140.0
150	152.0
160	160.0
180	180.0
200	203.0
225	229.0
250	254.0
280	280.0
300	305.0
315	315.0
355	355.0
400	406.0
450	457.0
500	508.0
560	568.0
630	638.0
710	718.0
800	810.0

ALNOR® ventilation systems
is a registered trademark protected by a technical patent. All modification rights reserved.

PE-clad mineral wool insulating sleeve

SLVD-PU



Description

This sleeve model is insulated with horizontal-fibre glass wool and intended for round ventilation ducts. The insulating layer is 25 or 50 mm thick, depending on the version, and the outer cladding is made of grey polyethylene. with high vibration strength. This is a perfect solution for quick installation of ductwork thermal insulation.

Packaging: 10 metre sections in reels packed in plastic bags.
Temperature range: -30˚C to +90˚C

Available materials — Product code example

SLVD-PU-25 - 25 mm glass wool + PE cladding, 100 micron thick
SLVD-PU-PE-25 - PET film + 25 mm mineral wool insulation + PE cladding 00 micron thick
SLVD-PU-50 - 50 mm glass wool + PE cladding, 100 micron thick
SLVD-PU-PE-50 - PET film + 50 mm mineral wool insulation + PE cladding, 100 micron thick

Product code example

Product code: **SLVD-PU - aaa - bbb - cccc**

type
insulation thickness
Ød$_1$
lenght

Dimensions

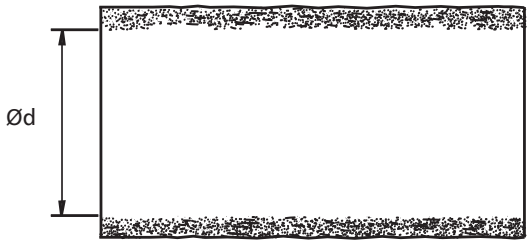

Ød$_{1\ nom}$ (mm)	*Ød out. (mm)*
80	82.0
100	102.0
125	127.0
140	140.0
150	152.0
160	160.0
180	180.0
200	203.0
225	229.0
250	254.0
280	280.0
300	305.0
315	315.0
355	355.0
400	406.0
450	457.0
500	508.0
560	568.0
630	638.0
710	718.0
800	810.0

ALNOR® ventilation systems
is a registered trademark protected by a technical patent. All modification rights reserved.

FLX-REKU / FLX-REKU-OVAL
Air distribution system

ALNOR reserves the right to modify technical specifications in line with the policy of continuous product improvement.

ALNOR® ventilation system
is a registered trademark protected by a technical patent. All modification rights reserved.

TECHNICAL INFORMATION

System description

The FLX-REKU air distribution ductwork consists of ventilation semi-rigid ducts, distribution and plenum boxes, ventilation dampers and other elements that, together with a heat recovery unit, constitute a complete mechanical ventilation system with heat recovery (MVHR). The FLX-REKU system is a great solution when high durability and flexibility are required. The high circumferential rigidity allows burying the ducts in concrete.

Dimensions

Main component of FLX-REKU air distribution system is radial, semi-rigid ducting in the outer diameter Ø50, Ø63, Ø75 or Ø90 mm, with inner diameter of 40 mm, 51 mm, 63 mm or 75 mm respectively. In FLX-PLO plenum and distribution boxes duct connection spigots fit the inner dimension of the duct (male connection), while in FLX-PRO plenum and distribution boxes, duct connection spigots fit outer dimension (male connection).
Main component of FLX-REKU-OVAL air distribution system is oval, semi-rigid ducting (a trapezoid-like shape) with a height of only 52mm and a width of 132mm, low profile of FLX-REKU-OVAL system allows it to be installed easily in the floor and ceiling insulation layer.
FLX-HDPE-A ducts are complying with European norm EN 17192:2018 for ridged or semi-ridgid non-metallic ductwork, which defines the test methods and performance characteristics like airtightness, pressure drop, reaction to fire, resistance to external pressure , thermal resistance and microbial resistance.

Installation instructions

FLX-HDPE ducts are pushed onto male connectors with gasket in plenum and distribution boxes (FLX-PLO) or inserted into female connectors with inner gaskets. In both cases the connection is airtight and easily made. Such ductwork can be laid in the concrete screed or inside the insulation layer. Round ducts are delivered in 50m long coils and oval in 20m ones - this minimalize the need for unnecessary connections. Regardless of, system includes male and female couplings. Typically, the system consists of supply and exhaust manifolds (FLX-PLO-R or FLX-PRO-R) with the number of outlets matched to ductwork and the number of rooms, and the appropriate number of plenum boxes for valves (FLX-PLO or FLX-PRO). Each plenum box is connected to the manifold with 1,2 or 3 FLX-HDPE pipes, depending on the required airflow, while maintaining an optimal air speed (2 - 2.5 m / s). To complete the FLX-REKU system, you can use SPIRAL® system elements, such as galvanized ducts, elbows, fittings, air intakes, outlets and more. As a rule, the SPIRAL® system is used on the following sections: from intake / exhaust to air handling unit and to distributions boxes.

Application advantages

The relatively small dimensions and an unique structure allow installing FLX ducts under the ceiling, on walls and laid on floors. The FLX ducts can be also concealed under drywall panels or wet render. The superior durability and strength of FLX materials can withstand the pressure of cast concrete and make this FLX system perfect for burying in separating floor slabs and cast-in-place flooring systems. The low-profile plenum boxes save space and usually do not require any specific finish of walls or ceiling systems. The antimicrobial lining in FLX-HDPE-A flexible ducts contains silver ions. The bactericidal and fungicidal performance of this ducting is certified with independent tests.

How to order

Product code: FLX-PLO-R-Ød$_2$-1-2-3-4-Ød$_1$

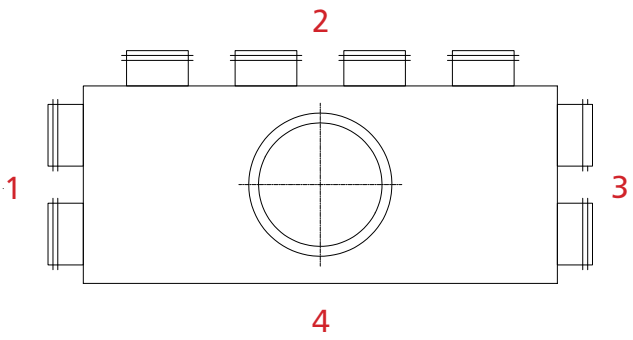

where:

type	(FLX-PLO or FLX-PRO for Ø63mm)
Ød$_2$	FLX-HDPE duct connection spigot (Ø63, Ø75, Ø90)
1-2-3-4	number and configuration of connection spigots
Ød$_1$	80,100,125,150,160,180,200,250 mm SPIRAL duct diameter
Z	no connection spigots, DIY solution = cutting at the construction site
F	female connection / no symbol = male connection

Connection

Typical connection diameters (d1) for ductwork in FLX-REKU system manifolds are Ø 100, 125, 160, 180,200 or 250mm (just like the diameter of the outlets in residential air handling units), e.g. FLX-PLO-R-75-3-5-3-5-160.
FLX-PLO plenum and distribution boxes have male connections (d2) Ø75 or Ø90 mm, while FLX-PRO (d2) Ø63 mm have female ones. Plenum boxes as standard are made with a male connection spigot with a gasket (d1) - e.g. PLX-PLO-75-2-100. The female connection spigot (d1) will be marked with the letter – F in the product code, e.g. FLX-PLO-90-1-125-F

ALNOR® ventilation system
is a registered trademark protected by a technical patent. All modification rights reserved.

Semi-rigid ducting

FLX-HDPE/FLX-HDPE-A



Description

FLX-HDPE and FLX-HDPE-A plastic ducts are used to air distribution in domestic ventilation systems. Relatively small diameters allow to hide the installation in ceilings, screeds or suspended ceilings. FLX-HDPE and FLX-HDPE-A semi-rigid ducts are connected to other system components like plenum boxes or distribution boxes with a simple push fit connection. Application of seals on the FLX-PLO plenum boxes' spigots guarantees high air tightness system.
FLX-HDPE and FLX-HDPE-A semi-rigid ducting is made of high-impact polyethylene. This makes the entire ventilation ductwork very durable.
FLX-HDPE-A ducts are complying with European norm **EN 17192:2018** for ridged or semi-ridgid non-metallic ductwork, which defines the test methods and performance characteristics like airtightness, pressure drop, reaction to fire, resistance to external pressure , thermal resistance and microbial resistance.

The semi-rigid ducting is delivered in 50-metre long coils.

Dimensions of the coil:
FLX-HDPE-A-50: 1200cm x 40cm
FLX-HDPE-A-63: 1200cm x 40cm
FLX-HDPE-75/FLX-HDPE-A-75: 1100cm x 40cm
FLX-HDPE-90/FLX-HDPE-A-90: 1400cm x 50cm

Product code example
Product code: **FLX - HDPE - 75**

type
material
diameter

Dimensions

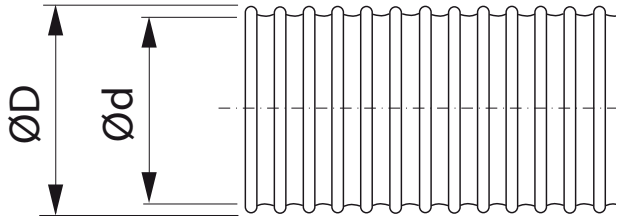

Product code	ØD [mm]	Ød [mm]	Bend radius [m]	Weight [kg]
FLX-HDPE-A-50	50	41	0.23	0.23
FLX-HDPE-A-63	63	51	0.26	0.26
FLX-HDPE-75	75	63	0.29	0.31
FLX-HDPE-A-75	75	63	0.29	0.31
FLX-HDPE-90	90	75	0.33	0.42
FLX-HDPE-A-90	90	75	0.33	0.42

ALNOR® ventilation system
is a registered trademark protected by a technical patent. All modification rights reserved.

FLX-HDPE/FLX-HDPE-A

Technical data

Pressure drop for 75 and 90mm ducts,
straight section L=1m

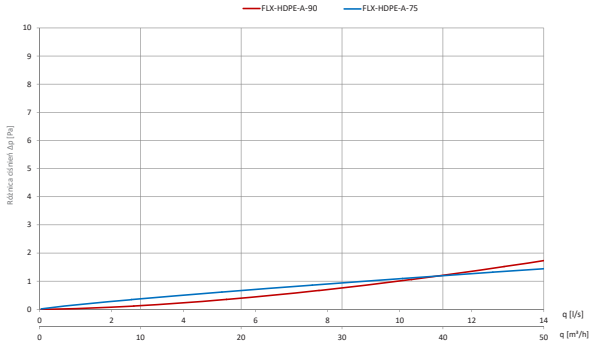

* greater pressure drop for higher airflow for 90mm duct occurs because of its curved inner structure

Pressure drop for FLX-HDPE-A-90 duct with various bend radiuses 15-90° L=1,5m

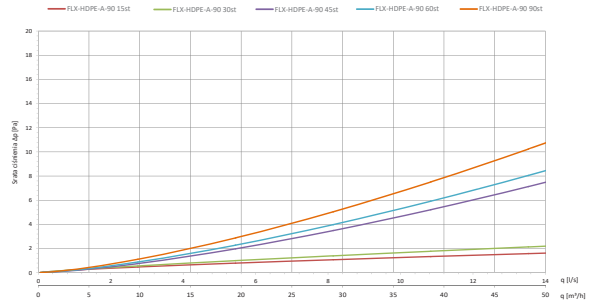

Pressure drop for FLX-HDPE-A-75 duct with various bend radiuses 15-90° L=1,5m

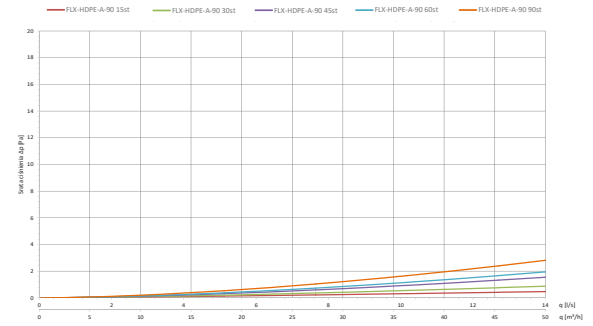

Characteristics of the product according to EN 17192:2018

Air tightness class	ATC 3 (old C)	EN 12237
Service temperature	STL -20°C to STH +100°C	EN 17192:2019-01
Reaction to fire class	E	EN 13501-1
Resistance to external pressure	DN63mm: 343 N DN75mm: 394 N DN90mm: 366 N	EN 17192:2019-01
Thermal resistance	λm=0,3900 W/(m·k)	EN 12664:2002
Microbial resistance	R = 2,9	EN ISO 22196:2011

ALNOR® ventilation system
is a registered trademark protected by a technical patent. All modification rights reserved.

Plenum box for air valve

FLX-PLO/FLX-PRO



Description

FLX-PLO / FLX-PRO plenum boxes are components of the FLX-REKU system intended for domestic mechanical ventilation systems, also known as mechanical ventilation heat recovery (MVHR) or heat recovery ventilation.
The low profile plenum boxes require less installation space than standard solutions, which is very convenient when they should not be prominent once concealed. This advantage helps free up usable indoor area.
FLX-PLO plenum boxes are made of galvanized steel sheet.
Plenum boxes made from stainless steel are available on request.
Available also insulated plenum box version - **FLX-PLI** and **FLX-PRI**. These plenum boxes have inside a insulation lining made from 9 mm thick rubber foam.
FLX-PLO plenum boxes are equipped with duct connection spigot Ød2 with a EPDM seal – this type of connection with FLX-HDPE ducting is airtight and easy to install.

Product code example

Product code **FLX-PLO - 75 - 2 - 150 - F**

- type
- diameter Ød$_2$
- number of spigots n
- diameter Ød$_1$
- type of connection
  - male
  - F - female

Dimensions

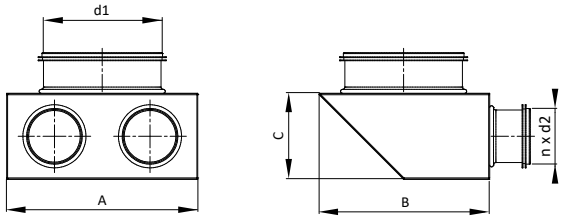

Product code	A [mm]	B [mm]	C [mm]	d_1 [mm]	n [szt.]	d_2 [mm]
FLX-PRO-63-1-d$_1$	180	180	75	80-160	1	63
FLX-PRO-63-2-d$_1$	180	180	75	80-160	2	63
FLX-PRO-63-3-d$_1$	180	270	75	80-160	3	63
FLX-PLO-75-1-d$_1$	180	200	90	80-160	1	63
FLX-PLO-75-2-d$_1$	180	200	90	80-160	2	63
FLX-PLO-75-3-d$_1$	180	300	90	80-160	3	63
FLX-PLO-90-1-d$_1$	180	200	90	80-160	1	75
FLX-PLO-90-2-d$_1$	180	200	90	80-160	2	75
FLX-PLO-90-3-d$_1$	180	300	90	80-160	3	75

Duct connection spigot d$_1$: 80, 100, 125, 150, 160 mm

FLX-CS-PVC end caps fit connection spigots of FLX-PLO-75 and FLX-PLO-90 plenum boxes.



FLX-CF-PVC end caps fit (inside) duct connection spigots of FLX-PRO-63 plenum boxes.



ALNOR® ventilation system
is a registered trademark protected by a technical patent. All modification rights reserved.

Plenum box for air valve

FLX-PLO/FLX-PRO

Technical data

Pressure drop charts for the supply air plenum box: Ø100, Ø125

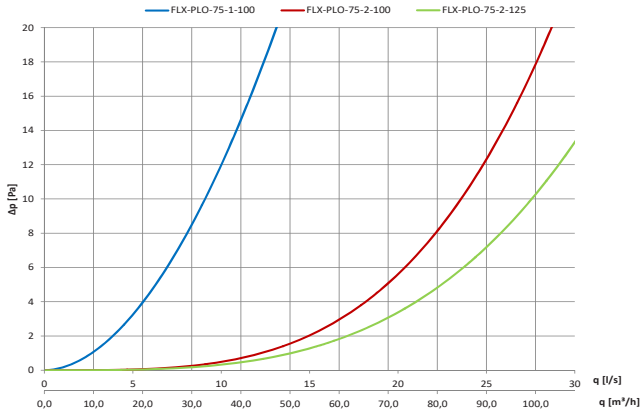

Pressure drop charts for the exhaust air plenum box: Ø100, Ø125

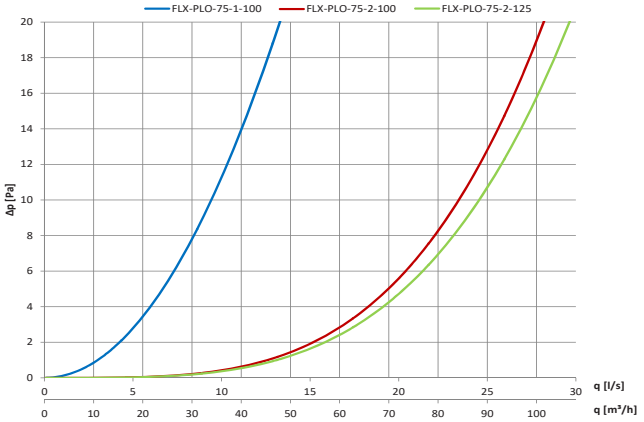

Types of plenum boxes

FLX-PLO plenum box

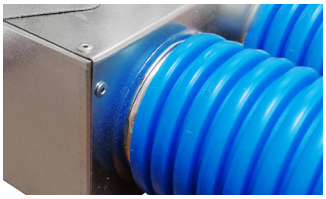

FLX-PRO plenum box (spigot - 63mm only)



FLX-PLO-75-2-160 male connection spigot Ød$_1$ with a seal



FLX-PLO-75-2-160-F female connection spigot Ød$_1$

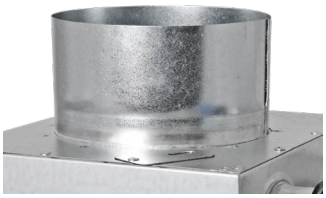

On request, plenum boxes can be supplied with additional safety clips, that secure the semi-rigid duct in the place and protect it from disconnecting: FLX-PLO-75-...-H



ALNOR® ventilation system
is a registered trademark protected by a technical patent. All modification rights reserved.

Plenum boxes with long connection spigot for air valve

FLX-PLO-L / FLX-PRO-L



Description

FLX-PLO-L / FLX-PRO-L plenum boxes with long connection spigot are components of the FLX-REKU system intended for domestic mechanical ventilation systems, also known as mechanical ventilation heat recovery (MVHR) or heat recovery ventilation The low profile plenum boxes require less installation space than standard solutions, which is very convenient when they should not be prominent once concealed. This advantage helps free up usable indoor area.
FLX-PLO-L / FLX-PRO-L plenum boxes are made of galvanized steel sheet. Plenum boxes made from stainless steel are available on request. Available also insulated plenum box version - FLX-PLI-L/ FLX-PRI-L. These plenum boxes have inside a insulation lining made from 9 mm thick rubber foam.
FLX-PLO-L plenum boxes are equipped with duct connection spigot Ød2 with a EPDM seal – this type of connection with FLX-HDPE ducting is airtight and easy to install.

Product code example

Product code **FLX-PLO-L - 75 - 2 - 150 - F**

- type
- diameter Ød$_2$
- number of spigots n
- diameter Ød$_1$
- type of connection
  - male
  - F - female

Dimensions

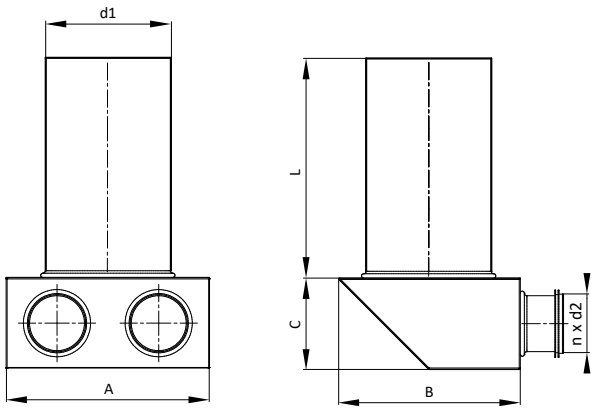

Product code	A [mm]	B [mm]	C [mm]	L [mm]	d_1 [mm]	n [pcs.]	d_2 [mm]
FLX-PRO-L-63-1-d$_1$	180	180	75	320	80-160	1	63
FLX-PRO-L-63-2-d$_1$	180	180	75	320	80-160	2	63
FLX-PRO-L-63-3-d$_1$	180	270	75	320	80-160	3	63
FLX-PLO-L-75-1-d$_1$	180	200	90	320	80-160	1	63
FLX-PLO-L-75-2-d$_1$	180	200	90	320	80-160	2	63
FLX-PLO-L-75-3-d$_1$	180	300	90	320	80-160	3	63
FLX-PLO-L-90-1-d$_1$	180	200	90	320	80-160	1	75
FLX-PLO-L-90-2-d$_1$	180	200	90	320	80-160	2	75
FLX-PLO-L-90-3-d$_1$	180	300	90	320	80-160	3	75

Duct connection spigot d$_1$: 80, 100, 125, 150, 160 mm

FLX-CS-PVC end caps fit connection spigots of FLX-PLO-75 and FLX-PLO-90 plenum boxes.

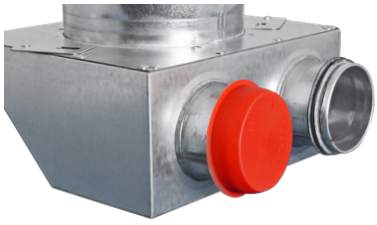

FLX-CF-PVC end caps fit (inside) duct connection spigots of FLX-PRO-63 plenum boxes.



ALNOR® ventilation system
is a registered trademark protected by a technical patent. All modification rights reserved.

Plenum boxes with long connection spigot for air valve

FLX-PLO-L / FLX-PRO-L

Types of plenum boxes

FLX-PLO plenum box

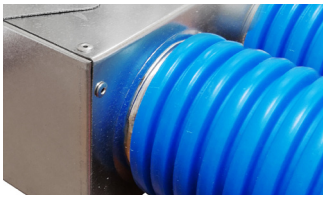

FLX-PRO plenum box (spigot - 63mm only)



FLX-PLO-75-2-160 male connection spigot Ød$_1$ with a seal



FLX-PLO-75-2-160-F female connection spigot Ød$_1$

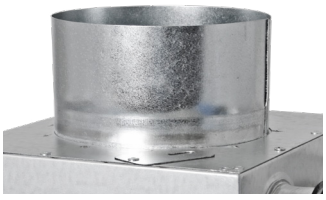

On request, plenum boxes can be supplied with additional safety clips, that secure the semi-rigid duct in the place and protect it from disconnecting: FLX-PLO-75-...-H



How to install





ALNOR® ventilation system
is a registered trademark protected by a technical patent. All modification rights reserved.

Extension piece for plenum boxes - FLX-Reku System

FLX-SRGL-320



Description

FLX-SRGL-320 is an extension piece made of longitudinal seam welded plain pipe in 320mm length. The extension piece is applied for FLX-PLO, FLX-PRO, FLX-PLO-P and FLX-PRO-P plenum boxes and used as an extension of the spigot Ød$_1$ for a supply/ exhaust air valve, e.g. equal to slab thickness.

Product code example

Product code **FLX-SRGL - 100 - 320**

type
air valve diameter
length

Dimensions

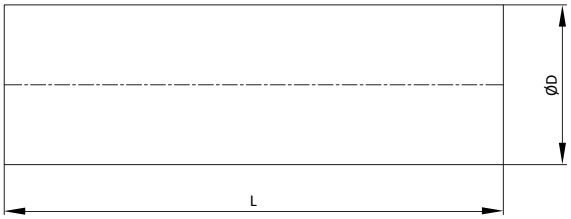

Product code	*Diameter ØD [mm]*	*Length L [mm]*
FLX-SRGL-080-0032	80	320
FLX-SRGL-100-0032	100	320
FLX-SRGL-125-0032	125	320
FLX-SRGL-140-0032	140	320
FLX-SRGL-150-0032	150	320
FLX-SRGL-160-0032	160	320
FLX-SRGL-180-0032	180	320
FLX-SRGL-200-0032	200	320

How to install





ALNOR® ventilation system
is a registered trademark protected by a technical patent. All modification rights reserved.

Plenum boxes for grilles

FLX-PLO-MOV



Description

The FLX-MOV plenum box is used for mounting supply-exhaust grilles in the residential ventilation system with heat recovery unit. The plenum box has on the one end male duct connection spigot for FLX-HDPE ducts, and on the other end it has a slot adapted to SHR grilles.
In addition, the height (length) of the plenum box is adjustable in the range of 200-310, which allows you to match the plenum box size to the partition thickness.

Product code example

Product code **FLX-PLO-MOV - 75 - 2**

type
diameter
number of spigots

Dimensions

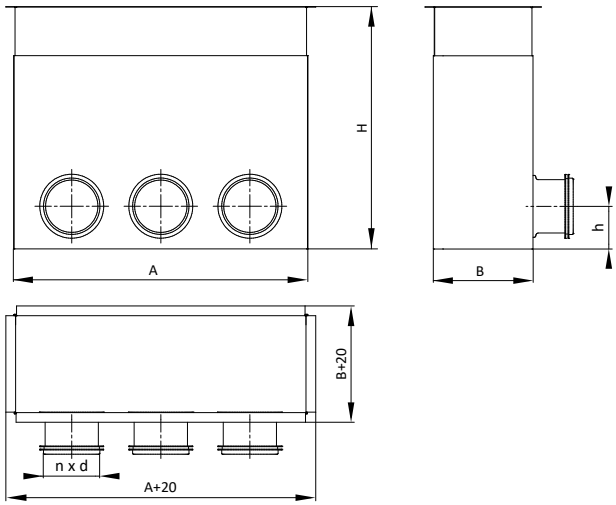

Product code	SHR	A [mm]	B [mm]	H [mm]	d [mm]	h [mm]	n [pcs]
FLX-PLO-MOV-75-2	200x100	204	103	200-310	63	44	2
FLX-PLO-MOV-75-3	300x100	304	103	200-310	63	44	3

How to install



ALNOR® ventilation system
is a registered trademark protected by a technical patent. All modification rights reserved.

Distribution box for FLX-REKU system

FLX-PLO-R / FLX-PRO-R



Description

The FLX-PLO-R / FLX-PRO-R distribution boxes (manifolds) are used to run the domestic ventilation ductwork to each individual room. As a rule, one air distribution box with a proper amount of FLX duct connection spigots is installed in the supply and exhaust air. However, the number of air distribution boxes depends on the building design. The Ød1 connection spigot is used to connect the main supply or exhaust duct from the heat recovery unit. FLX-HDPE / FLX-HDPE-A ducting is connected to Ød2 connection spigots.
FLX-PLO-R / FLX-PRO-R distribution boxes are made of galvanized steel sheet. Air distribution boxes made from stainless steel are available on request.
Available also insulated distribution box version - FLX-PLI-R / FLX-PRI-R. These distribution boxes have inside a insulation lining made from 9 mm thick rubber foam.
FLX-PLO-R distribution boxes are equipped with duct connection spigots Ød2 with an EPDM seal – this type of connection with FLX-HDPE ducting is airtight and easy to install.

Product code example

Product code: **FLX-PLO-R - 75 - 2-4-2-0 - 160 - F**

type
diameter Ød$_2$
number of spigots n
diameter Ød$_1$
type of connection
male
F - female

Dimensions

An example of a technical drawing of FLX-PLO-R-75-3-5-3-5-d1 distribution box

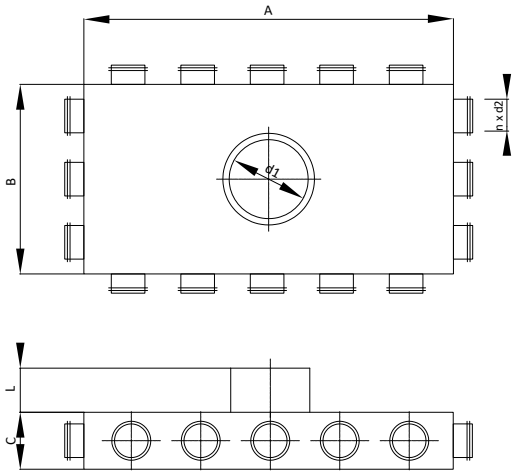

Product code	A [mm]	B [mm]	C [mm]	L [mm]	d_1 [mm]	n [pcs.]	d_2 [mm]
FLX-PRO-R-63-2-4-2-0-d1	360	180	75	60	80-250	8	63
FLX-PRO-R-63-0-3-0-3-d1	270	270	75	60	80-250	6	63
FLX-PRO-R-63-0-4-0-4-d1	360	360	75	60	80-250	8	63
FLX-PRO-R-63-3-6-3-0-d1	540	270	75	60	80-250	12	63
FLX-PRO-R-63-0-5-0-5-d1	450	450	75	60	80-250	10	63
FLX-PRO-R-63-0-7-0-7-d1	630	280	75	60	80-250	14	63
FLX-PRO-R-63-3-5-3-5-d1	450	270	75	60	80-250	16	63
FLX-PRO-R-63-3-6-3-6-d1	540	270	75	60	80-250	18	63
FLX-PLO-R-75-2-4-2-0-d1	400	200	90	60	80-250	8	63
FLX-PLO-R-75-0-3-0-3-d1	300	300	90	60	80-250	6	63
FLX-PLO-R-75-0-4-0-4-d1	400	300	90	60	80-250	8	63
FLX-PLO-R-75-3-6-3-0-d1	600	300	90	60	80-250	12	63
FLX-PLO-R-75-0-5-0-5-d1	500	300	90	60	80-250	10	63
FLX-PLO-R-75-0-7-0-7-d1	700	300	90	60	80-250	14	63
FLX-PLO-R-75-3-5-3-5-d1	500	300	90	60	80-250	16	63
FLX-PLO-R-75-3-6-3-6-d1	600	300	90	60	80-250	18	63
FLX-PLO-R-90-2-4-2-0-d1	400	200	90	60	80-250	8	75
FLX-PLO-R-90-0-3-0-3-d1	300	300	90	60	80-250	6	75
FLX-PLO-R-90-0-4-0-4-d1	400	300	90	60	80-250	8	75
FLX-PLO-R-90-3-6-3-0-d1	600	300	90	60	80-250	12	75
FLX-PLO-R-90-0-5-0-5-d1	500	300	90	60	80-250	10	75
FLX-PLO-R-90-0-7-0-7-d1	700	300	90	60	80-250	14	75
FLX-PLO-R-90-3-5-3-5-d1	500	300	90	60	80-250	16	75
FLX-PLO-R-90-3-6-3-6-d1	600	300	90	60	80-250	18	75

ALNOR® ventilation system
is a registered trademark protected by a technical patent. All modification rights reserved.

Distribution box for FLX-REKU system

FLX-PLO-R / FLX-PRO-R

How to order

Product code: FLX-PLO-R-Ød$_2$-1-2-3-4-Ød$_1$

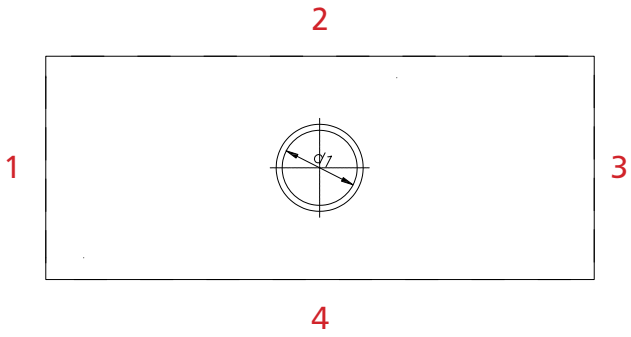

where:

type	FLX-PLO
Ød$_2$	FLX-HDPE-50 duct connection spigot (Ø50 mm)
1-2-3-4	number and configuration of connection spigots
Ød$_1$	80,100,125,150,160,180,200,250 mm SPIRAL duct diameter
Z	no connection spigots, DIY solution = cutting at the construction site
F	female connection / no symbol = male connection

Choose distribution box according to number of spigots:

FLX-HDPE Ø [mm]	*No. of FLX duct connection spigots n [pcs.]*	*Product code of distribution box*
63	6	FLX-PRO-R-63-0-3-0-3-d1
	8	FLX-PRO-R-63-2-4-2-0-d1
	8	FLX-PRO-R-63-0-4-0-4-d1
	9	FLX-PRO-R-63-3-6-3-0-d1
	10	FLX-PRO-R-63-0-5-0-5-d1
	14	FLX-PRO-R-63-0-7-0-7-d1
	16	FLX-PRO-R-63-3-5-3-5-d1
	18	FLX-PRO-R-63-3-6-3-6-d1
75	6	FLX-PLO-R-75-0-3-0-3-d1
	8	FLX-PLO-R-75-2-4-2-0-d1
	8	FLX-PLO-R-75-0-4-0-4-d1
	9	FLX-PLO-R-75-3-6-3-0-d1
	10	FLX-PLO-R-75-0-5-0-5-d1
	14	FLX-PLO-R-75-0-7-0-7-d1
	16	FLX-PLO-R-75-3-5-3-5-d1
	18	FLX-PLO-R-75-3-6-3-6-d1
90	6	FLX-PLO-R-90-0-3-0-3-d1
	8	FLX-PLO-R-90-2-4-2-0-d1
	8	FLX-PLO-R-90-0-4-0-4-d1
	9	FLX-PLO-R-90-3-6-3-0-d1
	10	FLX-PLO-R-90-0-5-0-5-d1
	14	FLX-PLO-R-90-0-7-0-7-d1
	16	FLX-PLO-R-90-3-5-3-5-d1
	18	FLX-PLO-R-90-3-6-3-6-d1

Types of plenum boxes

FLX-PLO plenum box

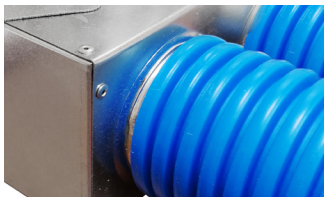

FLX-PRO plenum box (spigot - 63mm only)



FLX-PLO-75-2-160 male connection spigot Ød$_1$ with a seal



FLX-PLO-75-2-160-F female connection spigot Ød$_1$

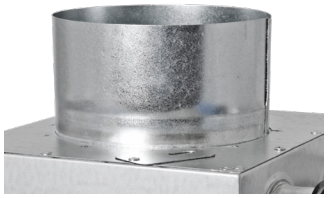

On request, plenum boxes can be supplied with additional safety clips, that secure the semi-rigid duct in the place and protect it from disconnecting: FLX-PLO-75-...-H



ALNOR® ventilation system
is a registered trademark protected by a technical patent. All modification rights reserved.

Distribution box for FLX-REKU system

FLX-PLO-R / FLX-PRO-R

Technical data

Pressure drop charts for supply air distribution boxes:

FLX-PLO-R-75-3-0-3-0-d1

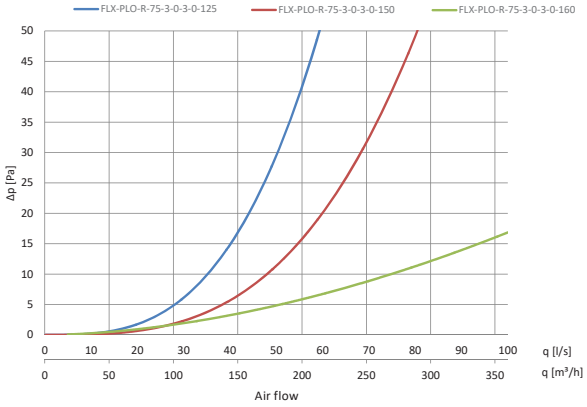

FLX-PLO-R-75-4-0-4-0-d1

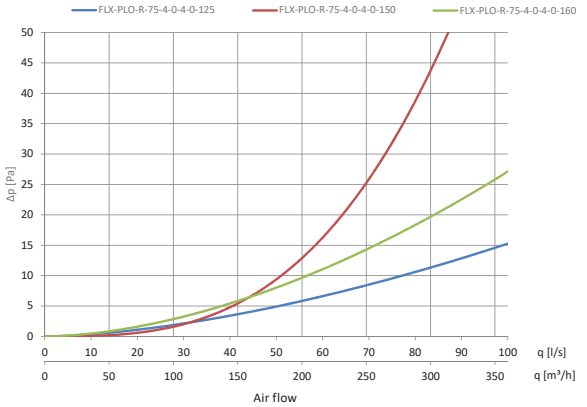

FLX-PLO-R-75-5-0-5-0-d1

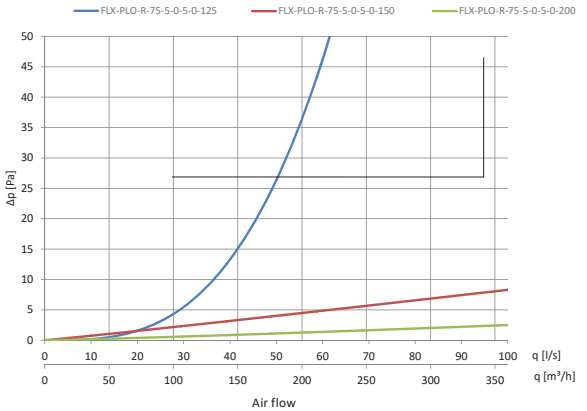

Pressure drop charts for exhaust air distribution boxes:

FLX-PLO-R-75-3-0-3-0-d1

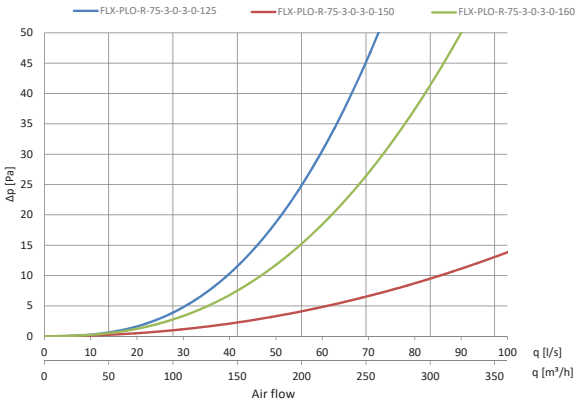

FLX-PLO-R-75-4-0-4-0-d1

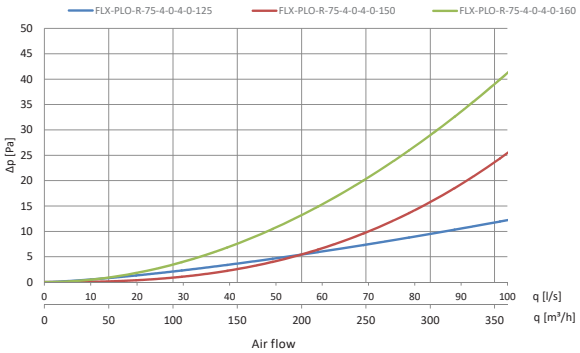

FLX-PLO-R-75-5-0-5-0-d1

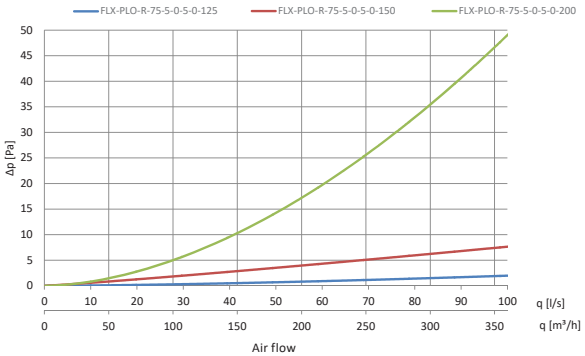

ALNOR® ventilation system
is a registered trademark protected by a technical patent. All modification rights reserved.

Distribution box for FLX-REKU system

FLX-PLO-R / FLX-PRO-R

Technical data

Pressure drop charts for supply air distribution boxes:

FLX-PLO-R-75-7-0-7-0-d1

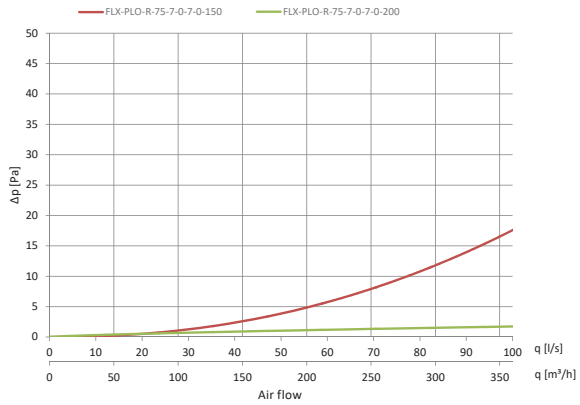

FLX-PLO-R-75-2-4-2-0-d1

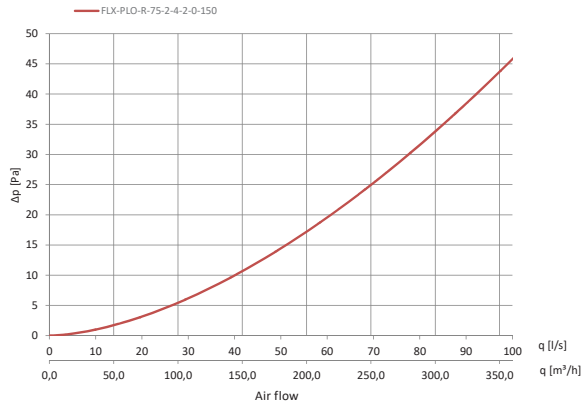

FLX-PLO-R-75-0-8-0-0-150-F-L / FLX-PLO-R-75-0-12-0-0-150-F-L

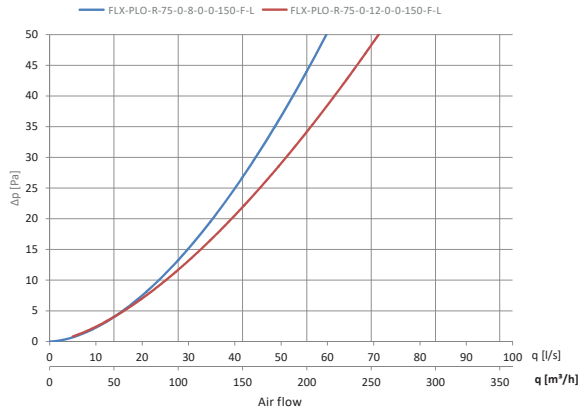

Pressure drop charts for exhaust air distribution boxes:

FLX-PLO-R-75-7-0-7-0-d1

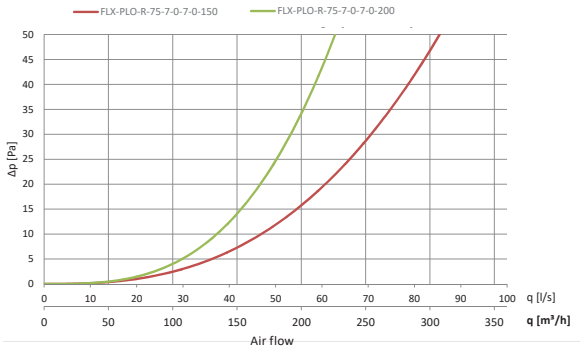

FLX-PLO-R-75-2-4-2-0-d1

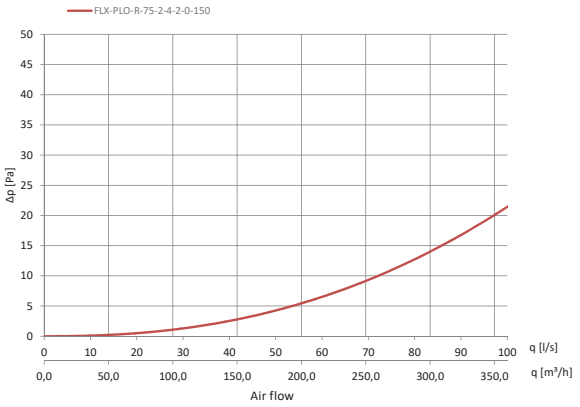

FLX-PLO-R-75-0-8-0-0-150-F-L / FLX-PLO-R-75-0-12-0-0-150-F-L

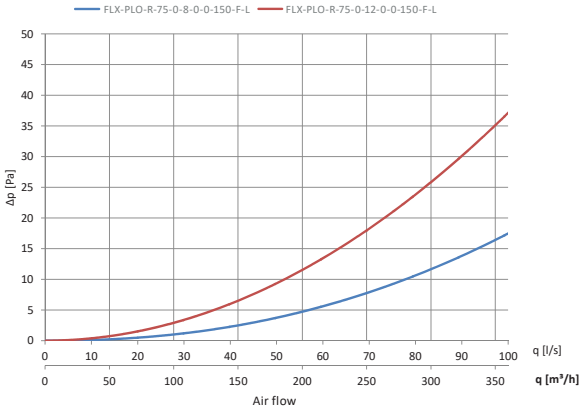

ALNOR® ventilation system
is a registered trademark protected by a technical patent. All modification rights reserved.

Horizontal plenum box for air valve

FLX-PLO-PL / FLX-PRO-PL

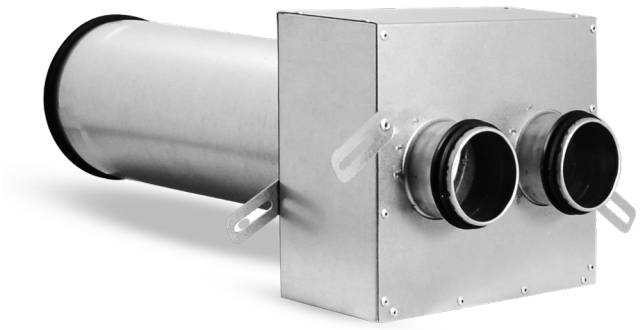

Description

FLX-PLO-P / FLX-PRO-P plenum boxes are components of the FLX-REKU system intended for domestic mechanical ventilation systems, also known as mechanical ventilation heat recovery (MVHR) or heat recovery ventilation. In this plenum box type, spigots Ød$_1$ and Ød$_2$ are aligned on single side.
The low profile plenum boxes require less installation space than standard solutions, which is very convenient when they should not be prominent once concealed. This advantage helps free up usable indoor area.
FLX-PLO-PL/FLX-PRO-PL plenum boxes are made of galvanized steel sheet. Plenum boxes made from stainless steel are available on request.
Available also insulated plenum box version - **FLX-PLI-PL/ FLX-PRI-PL**. These plenum boxes have inside a insulation lining made from 9 mm thick rubber foam.
FLX-PLO-PL plenum boxes are equipped with duct connection spigot Ød$_2$ with an EPDM seal – this type of connection with FLX-HDPE ducting is airtight and easy to install.

Product code example

Product code: **FLX-PLO-PL - 75 - 2 - 150 - F**

type
diameter Ød$_2$
number of spigots n
diameter Ød$_1$
type of connection
male
F - female

Dimensions

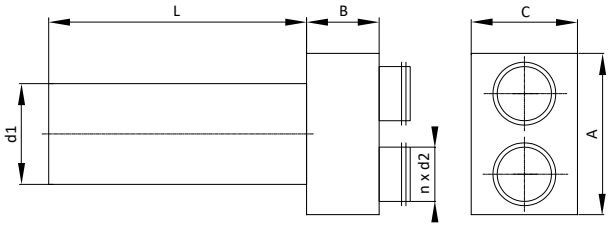

Product code	A [mm]	B [mm]	C [mm]	L [mm]	d_1 [mm]	n [pcs.]	d_2 [mm]
FLX-PRO-PL-63-2-d$_1$	180	90	200	320	80-160	2	63
FLX-PRO-PL-63-3-d$_1$	180	90	300	320	80-160	3	63
FLX-PLO-PL-75-2-d$_1$	220	90	220	320	125	2	75
FLX-PLO-PL-75-2-d$_1$	220	90	220	320	160	2	75
FLX-PLO-PL-75-2-d$_1$	250	90	250	320	200	2	75
FLX-PLO-PL-75-3-d$_1$	320	90	220	320	125	3	75
FLX-PLO-PL-75-3-d$_1$	320	90	220	320	160	3	75
FLX-PLO-PL-75-3-d$_1$	320	90	250	320	200	3	75
FLX-PLO-PL-90-2-d$_1$	250	90	250	320	125	2	90
FLX-PLO-PL-90-2-d$_1$	250	90	250	320	160	2	90
FLX-PLO-PL-90-2-d$_1$	250	90	250	320	200	2	90
FLX-PLO-PL-90-3-d$_1$	370	90	250	320	125	3	90
FLX-PLO-PL-90-3-d$_1$	370	90	250	320	160	3	90
FLX-PLO-PL-90-3-d$_1$	370	90	250	320	200	3	90

FLX-CS-PVC end caps fit connection spigots of FLX-PLO-75 and FLX-PLO-90 plenum boxes.

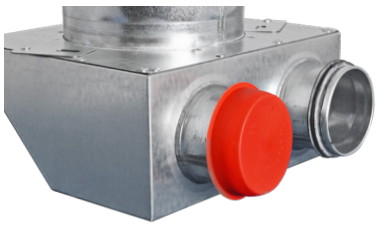

FLX-CF-PVC end caps fit (inside) duct connection spigots of FLX-PRO-63 plenum boxes.



ALNOR® ventilation system
is a registered trademark protected by a technical patent. All modification rights reserved.

Horizontal plenum box for air valve

FLX-PLO-PL / FLX-PRO-PL

Types of plenum boxes

FLX-PLO plenum box

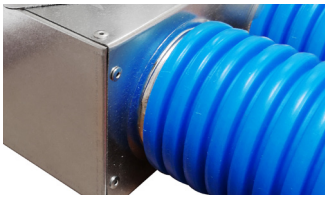

FLX-PRO plenum box (spigot - 63mm only)

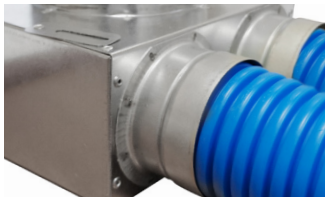

FLX-PLO-75-2-160 male connection spigot Ød$_1$ with a seal



FLX-PLO-75-2-160-F female connection spigot Ød$_1$



On request, plenum boxes can be supplied with additional safety clips, that secure the semi-rigid duct in the place and protect it from disconnecting: FLX-PLO-75-...-H



ALNOR® ventilation system
is a registered trademark protected by a technical patent. All modification rights reserved.

Horizontal distribution box for FLX-REKU system

FLX-PLO-R-P



Description

The FLX-PLO-R-P/ FLX-PRO-R-P distribution boxes (manifolds) are used to run the domestic ventilation ductwork to each individual room. The air distribution box is equipped with a perforated panel, which is intended for even airflow distribution. As a rule, one air distribution box with a proper amount of FLX duct connection spigots is installed in the supply and exhaust air. However, the number of air distribution boxes depends on the building design. The Ød1 connection spigot is used to connect the main supply or exhaust duct from the heat recovery unit. FLX-HDPE / FLX-HDPE-A ducting is connected to Ød2 connection spigots.
FLX-PLO-R-P / FLX-PRO-R-P distribution boxes are made of galvanized steel sheet. Air distribution boxes made from stainless steel are available on request.
Available also insulated distribution box version - FLX-PLI-R-P / FLX-PRI-R-P. These distrubutin boxes have inside a insulation lining made from 9 mm thick rubber foam.
FLX-PLO-R-P distrubution boxes are equipped with duct connection spigots Ød2 with a EPDM seal – this type of connection with FLX-HDPE ducting is airtight and easy to install.



FLX-CF-PVC end caps fit duct connection spigots Ød2 of FLX-PLO-R-P and FLX-PRO-R-P distribution boxes.

Product code example

Product code **FLX-PRO-R-P - 75 - 2x10 - 200 -**

type
diameter Ød$_2$
number of spigots n
diameter Ød$_1$
type of connection
male
F - female

Dimensions

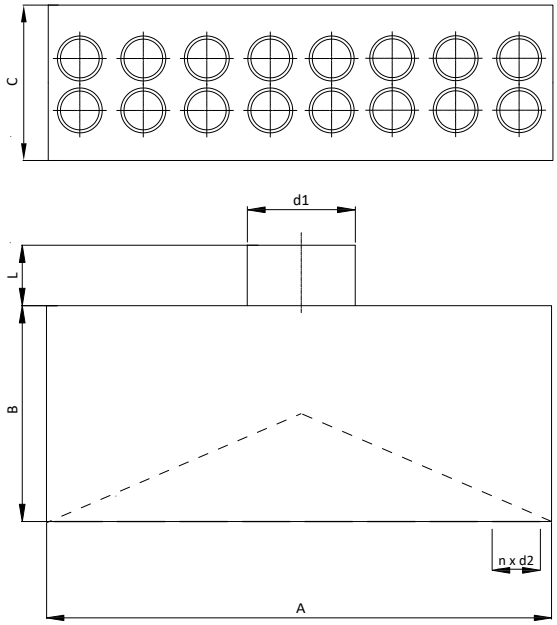

Product code	A [mm]	B [mm]	C [mm]	L [mm]	d_1 [mm]	n [pcs.]	d_2 [mm]
FLX-PRO-R-P-63-2x5-d1	500	180	230	60	80-250	10	63
FLX-PRO-R-P-63-2x6-d1	600	180	230	60	80-250	12	63
FLX-PRO-R-P-63-2x7-d1	700	180	230	60	80-250	14	63
FLX-PLO-R-P-75-2x5-d1	500	180	230	60	80-250	10	63
FLX-PLO-R-P-75-2x6-d1	600	180	230	60	80-250	12	63
FLX-PLO-R-P-75-2x7-d1	700	180	230	60	80-250	14	63
FLX-PLO-R-P-90-2x5-d1	500	180	230	60	80-250	10	75
FLX-PLO-R-P-90-2x6-d1	600	180	230	60	80-250	12	75
FLX-PLO-R-P-90-2x7-d1	700	180	230	60	80-250	14	75

Duct connection spigot d_1: 80, 100, 125, 150, 160, 180, 200, 250 mm.

Choose distribution box according to number of spigots:

FLX-HDPE Ø [mm]	No of FLX duct connection spigots n [pcs.]	Product code of distribution box
63	10	FLX-PRO-R-P-63-2x5-d1
	12	FLX-PRO-R-P-63-2x6-d1
	14	FLX-PRO-R-P-63-2x7-d1
75	10	FLX-PLO-R-P-75-2x5-d1
	12	FLX-PLO-R-P-75-2x6-d1
	14	FLX-PLO-R-P-75-2x7-d1
90	10	FLX-PLO-R-P-90-2x5-d1
	12	FLX-PLO-R-P-90-2x6-d1
	14	FLX-PLO-R-P-90-2x7-d1

ALNOR® ventilation system
is a registered trademark protected by a technical patent. All modification rights reserved.

FLX-PLO-R-P

Technical data

Pressure drop charts for supply air distribution boxes:

FLX-PLO-R-P-75-2x5-d1

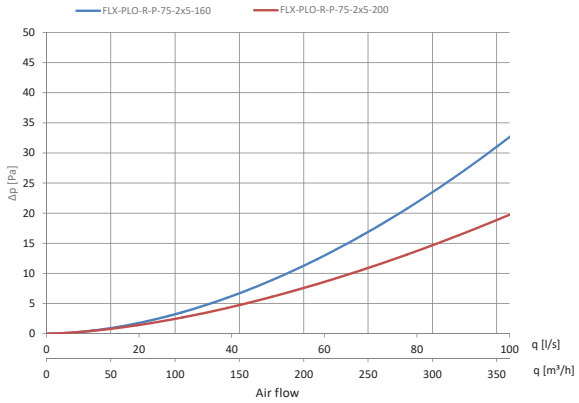

Pressure drop charts for exhaust air distribution boxes:

FLX-PLO-R-P-75-2x5-d1

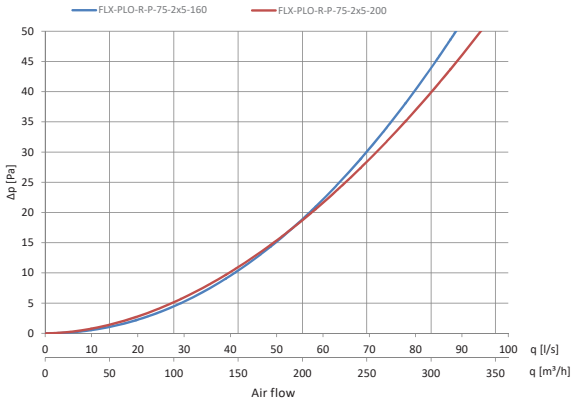

ALNOR® ventilation system
is a registered trademark protected by a technical patent. All modification rights reserved.

Silencer for heat recovery ventilation system

FLX-SQOL



Description

The FLX-SQOL silencer was designed as an attenuating element that is mounted before the FLX-PLO / FLX-PRO plenum box. It has either 1 or 2 spigots (just like the number of FLX-PLO / FLX-PRO plenum boxes spigots), the silencer is connected using FLX-HDPE ducting. In the case of 3-spigot FLX-PLO plenum boxes, it's recommended to use a combination of two silencers - 2n + 1n. The FLX-SQOL silencer are insulated with an attenuating material - non-combustible stone wool.

Product code example

Product code: **FLX-SQOL - 75 - 1 - 300**

type
diameter
number of spigots
length

Dimensions

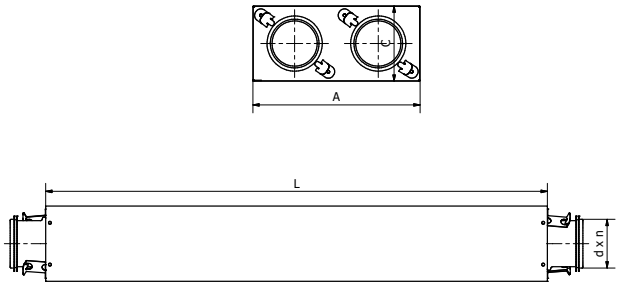

Product code	A [mm]	C [mm]	L [mm]	d [mm]	No of spigots n [pcs.]
FLX-SQOL-75-1-300	120	90	300	63	1
FLX-SQOL-75-1-600	120	90	600	63	1
FLX-SQOL-75-1-900	120	90	900	63	1
FLX-SQOL-75-2-300	200	90	300	63	2
FLX-SQOL-75-2-600	200	90	600	63	2
FLX-SQOL-75-2-900	200	90	900	63	2
FLX-SQOL-90-1-300	120	110	300	75	1
FLX-SQOL-90-1-600	120	110	600	75	1
FLX-SQOL-90-1-900	120	110	900	75	1
FLX-SQOL-90-2-300	240	110	300	75	2
FLX-SQOL-90-2-600	240	110	600	75	2
FLX-SQOL-90-2-900	240	110	900	75	2

ALNOR® ventilation system
is a registered trademark protected by a technical patent. All modification rights reserved.

Offset plenum box for heat recovery ventilation system

FLX-ODSQL



Description

FLX-ODSQL offset plenum boxes are components of the FLX-REKU system which are used to intersect two main ventilation ducts or to lead ducts over other installations in the floor. Offset plenum boxes with 1 or 2 FLX-HDPE duct connector spigots with a diameter of 75 and 90 mm are available.
FLX-ODSQL-75-1-300 can be crossed with three FLX-ODSQL-75-1-100 plenum boxes - the width of the maximum clearance allows to bypass up to 3 plenum boxes - 3x90mm (dimension A) <300 mm (dimension D).

Product code example
Product code: **FLX-ODSQL - 75 - 1 - 300**

type
diameter
number of spigots
length

Dimensions

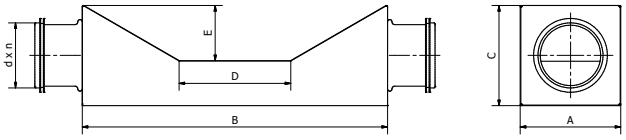

Product code	A [mm]	B [mm]	C [mm]	D [mm]	E [mm]	Ød [mm]	No of spigots n [pcs.]
FLX-ODSQL-75-1-100	90	275	90	100	50	63	1
FLX-ODSQL-75-1-300	90	475	90	300	50	63	1
FLX-ODSQL-75-2-100	200	275	90	100	50	63	2
FLX-ODSQL-75-2-300	200	475	90	300	50	63	2
FLX-ODSQL-90-1-120	110	310	110	120	60	75	1
FLX-ODSQL-90-1-370	110	50	110	370	60	75	1
FLX-ODSQL-90-2-120	240	310	110	120	60	75	2
FLX-ODSQL-90-2-370	240	550	110	370	60	75	2

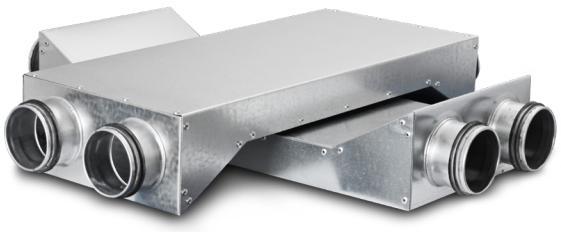

ALNOR® ventilation system
is a registered trademark protected by a technical patent. All modification rights reserved.

Pressed bends

FLX-BP



Description

FLX-BP pressed ventilation bends are used with the FLX-HDPE/ FLX-HDPE-A semi-rigid ducting. The bend is made by seam welding for improved installation airtightness. The duct is connected by inserting it into the bend. The pressed form of the ventilation bend helps to reduce the airflow resistance and the pressure loss. The air tightness class can be increased to class B by wrapping the joints with the TAL, MET or DUCT sealing tape.

Available materials — Product code example
FLX-BP-090-90-... - galvanized steel sheet

Product code example
Product code: **FLX-BP - aaa - 90**

type
Ød$_1$
°

Dimensions

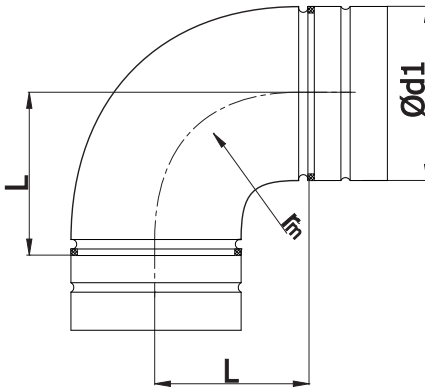

$r_m \approx 1 \times d_1$

Product code	*Ød$_1$ [mm]*	*L [mm]*
FLX-BP-075-90	75	100
FLX-BP-090-90	90	100

ALNOR® ventilation system
is a registered trademark protected by a technical patent. All modification rights reserved.

Short reducers for ventilation systems

FLX-RPC/FLX-RSCL



Description

FLX-RPC/FLX-RSCL reducers are used with the FLX-HDPE/ FLX-HDPE-A semi-rigid ducting. The reducer is made by seam welding for improved installation airtightness. The duct is connected by inserting it into the reducer. The air tightness class can be increased to class B by wrapping the joints with the TAL, MET or DUCT sealing tape.

Available materials — Product code example
FLX-RPC-...-... - galvanized steel sheet
FLX-RSCL-...-... - galvanized steel sheet

Product code example
Product code: **FLX-RPC - aaa - bbb**

type
Ød$_1$
Ød$_2$

Dimensions

FLX-RPC

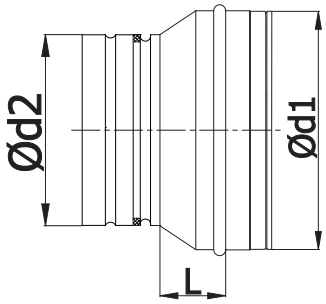

FLX-RSCL

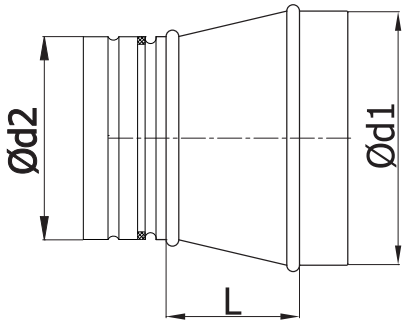

Product code	*Ø$_{1\ nom}$ [mm]*	*Ø$_{2\ nom}$ [mm]*	*L [mm]*	*Weight [kg]*
FLX-RPC-100-075	100	75	18	0.20
FLX-RPC-125-075	125	75	28	0.20
FLX-RPC-160-075	160	75	34	0.24
FLX-RSCL-100-090	100	90	47	0.19
FLX-RSCL-125-090	125	90	74	0.24
FLX-RSCL-160-090	160	90	113	0.35

ALNOR® ventilation system
is a registered trademark protected by a technical patent. All modification rights reserved.

Reducer/ transition piece for SPIRAL system and FLX-REKU system

FLX-RSFCLL



Description

FLX-RSFCLL reducer is used as a transition piece between SPIRAL system ductwork and FLX-REKU system ducting. On the one end it has male connection in diameters: 100-160mm (for SPIRAL duct), on the other end it has male connection in diameter 75 or 90mm for FLX-HDPE ducting.

Product code example

Product code:: **FLX-RSFCLL - 100 - 75**

type
diameter Ød$_1$
diameter Ød$_2$

Dimensions

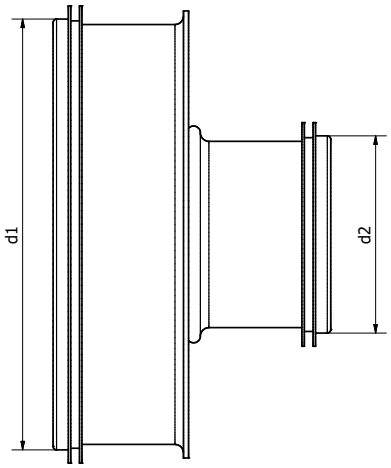

Product code	d_1 *[mm]*	d_2 *[mm]*
FLX-RSFCLL-100-75	100	63
FLX-RSFCLL-125-75	125	63
FLX-RSFCLL-160-75	160	63
FLX-RSFCLL-100-90	100	75
FLX-RSFCLL-125-90	125	75
FLX-RSFCLL-160-90	160	75

ALNOR® ventilation system
is a registered trademark protected by a technical patent. All modification rights reserved.

Pressed collar saddles for SPIRAL ducts

FLX-SP



Description

FLX-SP pressed collar saddle is used to join SPIRAL ductwork and FLX-REKU ducting.

Available materials — Product code example
FLX-SP-... -... - galvanized steel sheet

Product code example
Product code:: **FLX-SP - aaa - bbb**

type
$Ød_1$
$Ød_3$

Dimensions

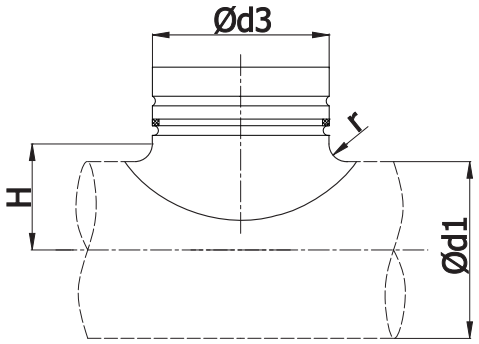

Product code	*$Ød_{1\ nom}$ - $Ød_{3\ nom}$ [mm]*	*diameter range for $Ød_{1\ nom}$ [mm]*	*r [mm]*	*H [mm]*	*Weight [kg]*
FLX-SP-100-75	100-75	100 - 112	10	60	0,1
FLX-SP-125-75	125-75	112 - 125 - 140	10	72	0,1
FLX-SP-160-75	160-75	150 - 160	10	90	0,1
FLX-SP-200-75	200-75	180 - 200	10	110	0,1
FLX-SP-250-75	250-75	224 - 250 - 280 300 - 315	10	135	0,1

ALNOR® ventilation system
is a registered trademark protected by a technical patent. All modification rights reserved.

Shut-off dampers

FLX-DAS



Description

FLX-DAS shut-off dampers are a good choice when the ductwork closure does not have to be fully airtight. This product is rather intended for regulation of the airflow. The damper closure angle is between 0 and 90°.
The FLX-DAS shutoff dampers are made from galvanized steel sheet. Available also damper version made from stainless steel on special request.

Product code example

Product code: **FLX-DAS - 75**

type
Ød$_1$

Dimensions

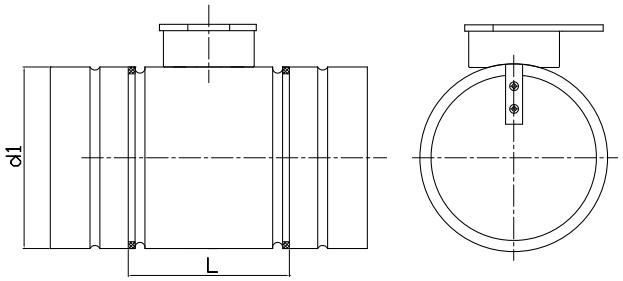

Product code	*d_1 [mm]*	*L [mm]*
FLX-DAS-75	75	110
FLX-DAS-90	90	110

ALNOR® ventilation system
is a registered trademark protected by a technical patent. All modification rights reserved.

Airtight shut-off dampers

FLX-DAT



Description

FLX-DAT dampers are a good choice when the ductwork closure must be airtight. The damper is used for cutting off the airflow. The damper closure angle is between 0 and 90°. The FLX-DAT airtight, shutoff dampers are made from galvanized steel sheet. Available also damper version made from stainless steel on special request.

Product code example

Product code: **FLX-DAT - 75**

type

Ød$_1$

Dimensions

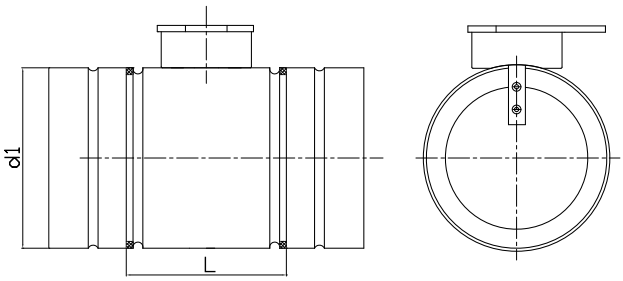

Product code	*d_1 [mm]*	*L [mm]*
FLX-DAT-75	75	110
FLX-DAT-90	90	110

ALNOR® ventilation system
is a registered trademark protected by a technical patent. All modification rights reserved.

Male coupling for FLX-REKU system

FLX-NSL



Description

The FLX-NSL male coupling is intended for the joining FLX-HDPE and FLX-HDPE-A semi-rigid ducting. The male coupling has factory installed EPDM rubber seals, which guarantee an airtight connection.

Product code example

Product code: **FLX-NSL - 75**

type

diameter

Dimensions

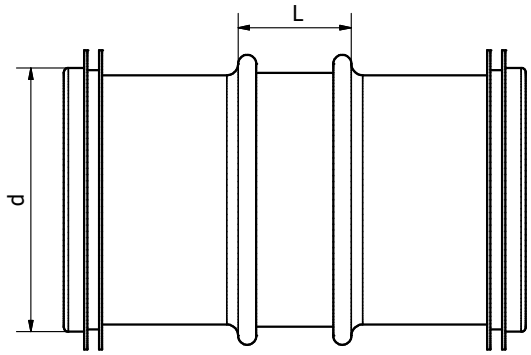

Product code	*d [mm]*	*L [mm]*
FLX-NSL-75	63	25
FLX-NSL-90	75	25

How to install

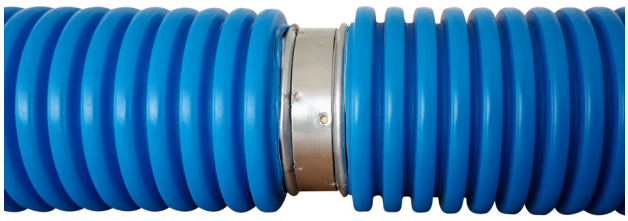

ALNOR® ventilation system
is a registered trademark protected by a technical patent. All modification rights reserved.

Female couplings

FLX-MSF...



Description

FLX-MSF female couplings are designed for joining sections of FLX-HDPE or FLX-HDPE-A ducting.
In order to achieve airtightness class C acc. EN 12237, it's recommended to use EPDM seals - FLX-USZ.

Product code example

Product code: **FLX-MSF - 75**

type

Ød$_1$

Dimensions

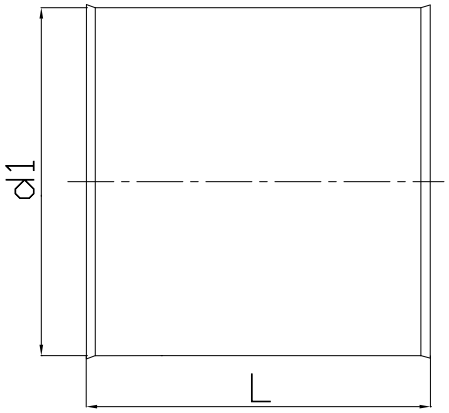

Product code	d_1 *[mm]*	*L [mm]*
FLX-MSF-63	63	100
FLX-MSF-75	75	100
FLX-MSF-90	90	100

ALNOR® ventilation system
is a registered trademark protected by a technical patent. All modification rights reserved.

Seal rings for FLX ducting

FLX-USZ...



Description

FLX-USZ-63/FLX-USZ-75/FLX-USZ-90 seal rings are made of EPDM and provide sealing at the connection between ducts and female couplings which meet the airtightness class C as per EN 12237.
FLX-USP-63/FLX-USP-75/FLX-USP-90 gaskets are made of foam and installed inside the connection spigots of plenum boxes and dampers. The gaskets are used to seal the connection between plenum boxes and semi-rigid ducting - meet the air tightness class B as per EN 12237.

FLX-UST-63/FLX-UST-75/FLX-UST-90 heat-shrink gaskets for connecting and sealing the joints between two ducts or a duct and a plenum box.

Product code example

Product code: **FLX-USZ - 75**

type

$Ød_1$

Dimensions

FLX-USZ-63 / FLX-USZ-75 / FLX-USZ-90

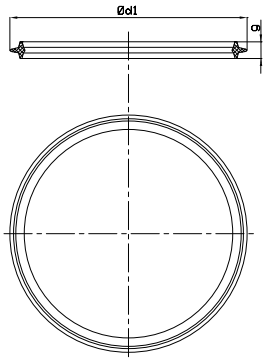

FLX-USP-63 / FLX-USP-75 / FLX-USP-90

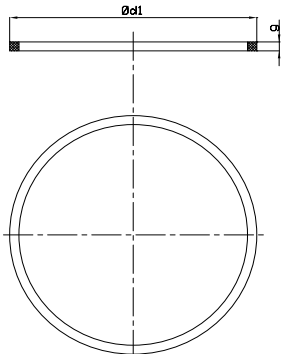

FLX-UST-63 / FLX-UST-75 / FLX-UST-90

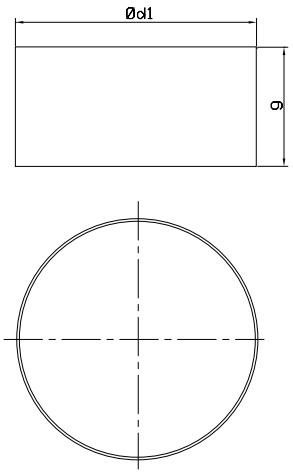

Product code	$Ød_1$ *[mm]*	*g [mm]*
FLX-USZ-63	65	8
FLX-USP-63	63	6
FLX-UST-63	63	100
FLX-USZ-75	78	8
FLX-USP-75	75	6
FLX-UST-75	75	100
FLX-USZ-90	93	8
FLX-USP-90	90	6
FLX-UST-90	90	100

ALNOR® ventilation system
is a registered trademark protected by a technical patent. All modification rights reserved.

Fastening support

FLX-FAX...



Description

FLX-FAX fastening supports facilitate routing and fastening of semi-rigid ducting at 90°. The fastening supports keep the installed duct firmly in place to prevent shifting when casting concrete floors over the ductwork.
The FLX-FAX fastening supports are made from galvanized steel sheet.
Special versions made from stainless steel are available on request.

Product code example

Product code: **FLX-FAX - 75 - 2**

type
Ød$_1$
number of ducts

Dimensions

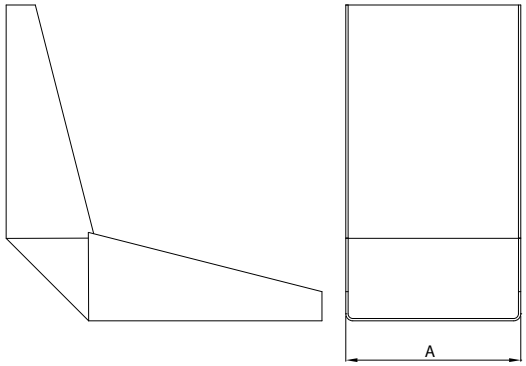

Product code	*A [mm]*
FLX-FAX-63	68
FLX-FAX-63-2	131
FLX-FAX-75	80
FLX-FAX-75-2	155
FLX-FAX-90	95
FLX-FAX-90-2	190

ALNOR® ventilation system
is a registered trademark protected by a technical patent. All modification rights reserved.

End caps

FLX-CS-PVC/FLX-CF-PVC



Description

The FLX-CS-PVC end cap is used for plugging the ends of FLX-HDPE and FLX-HDPE-A ducts, e.g. when installing ducting on the construction site - they effectively protect against contamination of the interior of the ducts. At the same time, FLX-CS-PVC end cap is also used to plug unused connection spigots in plenum boxes and FLX-PLO distribution boxes (but they are not inserted inside the spigot, but onto it).
FLX-CF-PVC end caps are used for plugging unused connection spigots in plenum boxes and FLX-PRO distribution boxes. The end caps are made of PVC.

Product code example

Product code: **FLX-CS-PVC - 75**

type
diameter

Dimensions

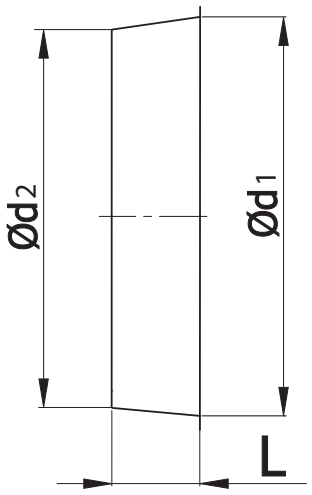

Product code	$Ø_1$ [mm]	$Ø_2$ *[mm]*	*L [mm]*
FLX-CS-PVC-63	51	49	20
FLX-CF-PVC-63	66	63	20
FLX-CS-PVC-75	63	59	20
FLX-CF-PVC-75	78	78	20
FLX-CS-PVC-90	76	74	20
FLX-CF-PVC-90	95	91	20

How to install



FLX-CS-PVC end caps fit inside FLX-HDPE and FLX-HDPE-A ducting.



FLX-CS-PVC end caps are mounted onto the connection spigots of FLX-PLO-75 and FLX-PLO-90 plenum boxes.



FLX-CF-PVC end caps fit inside the connection spigots of FLX-PRO-63 plenum boxes.

ALNOR® ventilation system
is a registered trademark protected by a technical patent. All modification rights reserved.

Plenum box for air valve

FLX-PLO-50



Description

The FLX-PLO-50 plenum boxes for air valve are the lowest plenum boxes available in FLX-REKU system.
Due to their small dimensions, these plenum boxes do not require much installation space, which is very convenient when they should not be prominent once concealed. This advantage helps free up usable indoor area.
One side of the plenum box is cut off and plays the role of a steering wheel - the air stream is immediately redirected to the ventilation ducts. FLX-PLO-50 plenum boxes are made of galvanized steel as a standard. Plenum boxes made from stainless steel are available on request

Product code example

Product code **FLX-PLO - 50 - 4 - 150 -**

type
diameter Ød$_2$
number of spigots n
duct diameter Ød$_1$
type of connection
male
F - female

Dimensions

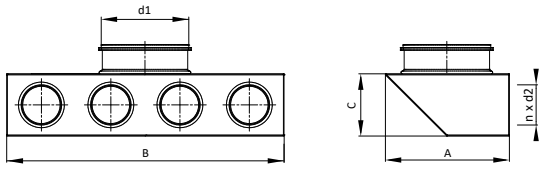

Product code	A [mm]	B [mm]	C [mm]	d_1 [mm]	n [pcs.]	d_2 [mm]
FLX-PLO-50-2-d_1	180	200	75	80-160	2	50
FLX-PLO-50-3-d_1	180	300	75	80-160	3	50
FLX-PLO-50-4-d_1	180	400	75	80-160	4	50

Duct connection spigot d_1: 80, 100, 125, 150, 160 mm

How to install



ALNOR® ventilation system
is a registered trademark protected by a technical patent. All modification rights reserved.

Plenum boxes with long connection spigot for air valve

FLX-PLO-L-50



Description

FLX-PLO-L-50 plenum boxes with long connection spigot are the lowest plenum boxes available in FLX-REKU System. Due to their small dimensions, these plenum boxes do not require much installation space, which is very convenient when they should not be prominent once concealed. This advantage helps free up usable indoor area. Plenum boxes are ideal solution for ventialtion systems with heat recovery.
FLX-PLO-L-50 plenum boxes are made of galvanized steel sheet. Plenum boxes made from stainless steel are available on request

Product code example

Product code **FLX-PLO-L - 50 - 3 - 150 -**

type
diameter Ød$_2$
number of spigots n
duct diameter Ød$_1$
type of connection
male
F - female

Dimensions

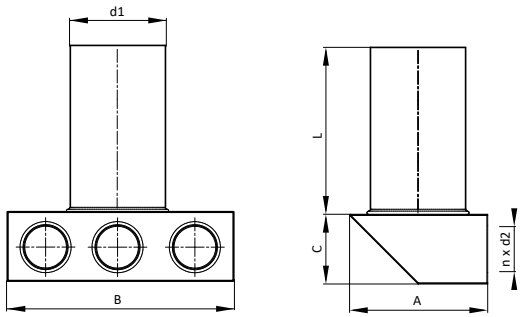

Product code	A [mm]	B [mm]	C [mm]	L [mm]	d_1 [mm]	n [pcs.]	d_2 [mm]
FLX-PLO-L-50-2-d_1	180	200	75	320	80-160	2	50
FLX-PLO-L-50-3-d_1	180	300	75	320	80-160	3	50
FLX-PLO-L-50-4-d_1	180	400	75	320	80-160	4	50

Duct connection spigot d_1: 80, 100, 125, 150, 160 mm

How to install



ALNOR® ventilation system
is a registered trademark protected by a technical patent. All modification rights reserved.

Distribution box for FLX-REKU system

FLX-PLO-R-50



Description

FLX-PLO-R-50 distribution boxes (manifold) are used to run the domestic ventilation ductwork to each individual room. As a rule, one distribution box is installed in the supply and exhaust air with the correct number of spigots for FLX-HDPE ducting. However, the building design specifics may require more distribution boxes. The Ød1 duct connection spigot is used to connect the main supply or exhaust air duct from the heat recovery unit. FLX-HDPE / FLXHDPE-A ducting is connected to Ød2 connection spigots.
FLX-PLO-R-50 distribution boxes are made of galvanized steel sheet. Air distribution boxes made from stainless steel are available on request.

Product code example

Product code: **FLX-PLO-R - 50 - 4-8-4-8 - 160 -**

type
diameter Ød$_2$
number of spigots
duct diameter Ød$_1$
type of connection
male
F - female

Dimensions

An example of a technical drawing of FLX-PLO-R-50-4-8-4-8-d1 distribution box

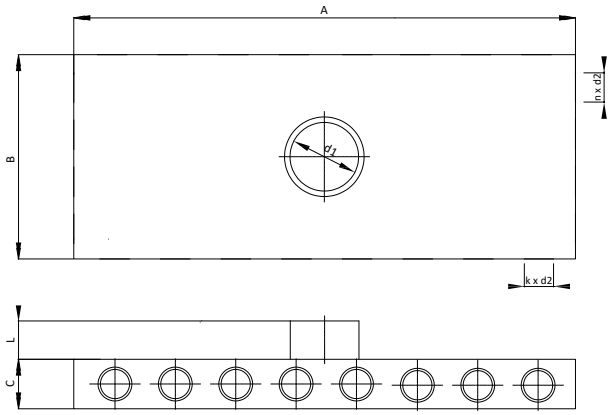

Product code	A [mm]	B [mm]	C [mm]	L [mm]	d_1 [mm]	n [pcs.]	d_2 [mm]
FLX-PLO-R-50-0-7-0-7-d1	700	300	75	60	80-250	14	50
FLX-PLO-R-50-3-5-3-5-d1	500	300	75	60	80-250	16	50
FLX-PLO-R-50-3-6-3-6-d1	600	300	75	60	80-250	18	50
FLX-PLO-R-50-4-8-4-8-d1	800	400	75	60	80-250	24	50

Duct connection spigot d_1: 80, 100, 125, 150, 160, 180, 200, 250 mm

Choose distribution box according to number of spigots:

FLX-HDPE Ø [mm]	No. of FLX duct connection spigots n [pcs.]	Product code of distribution box
50	14	FLX-PLO-R-50-0-7-0-7-d1
	16	FLX-PLO-R-50-3-5-3-5-d1
	18	FLX-PLO-R-50-3-6-3-6-d1
	24	FLX-PLO-R-50-4-8-4-8-d1

How to order

Product code: FLX-PLO-R-Ød$_2$-1-2-3-4-Ød$_1$

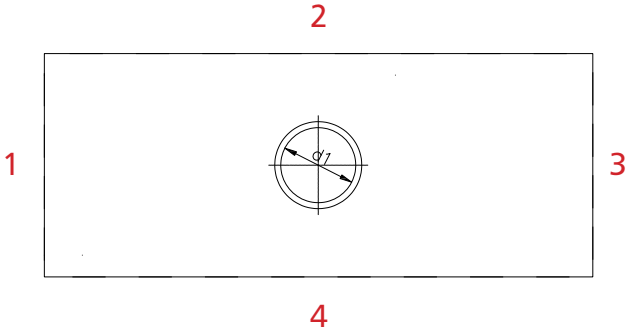

where:

type	FLX-PLO
Ød$_2$	FLX-HDPE-50 duct connection spigot (Ø50 mm)
1-2-3-4	number and configuration of connection spigots
Ød$_1$	80,100,125,150,160,180,200,250 mm SPIRAL duct diameter
Z	no connection spigots, DIY solution = cutting at the construction site
F	female connection / no symbol = male connection

ALNOR® ventilation system
is a registered trademark protected by a technical patent. All modification rights reserved.

Horizontal distribution box for FLX-REKU system

FLX-PLO-R-P-50



Description

FLX-PLO-R-P-50 distribution boxes (manifolds) are used to run the domestic ventilation ductwork to each individual room. The air distribution box is equipped with a perforated panel, which is intended for even airflow distribution.
As a rule, one air distribution box with a proper amount of FLX-HDPE duct connection spigots is installed in the supply and exhaust air. However, the number of air distribution boxes depends on the building design. The Ød1 connection spigot is used to connect the main supply or exhaust duct from the heat recovery unit. FLX-HDPE / FLX-HDPE-A ducting is connected to Ød2 connection spigots.
FLX-PLO-R-P-50 distribution boxes are made of galvanized steel sheet. Air distribution boxes made from stainless steel are available on request

Product code example

Product code **FLX-PLO-R-P - 50 - 2x8 - 200 -**

type
diameter Ød$_2$
number of spigots n
diameter Ød$_1$
type of connection
male
F - female

Dimensions

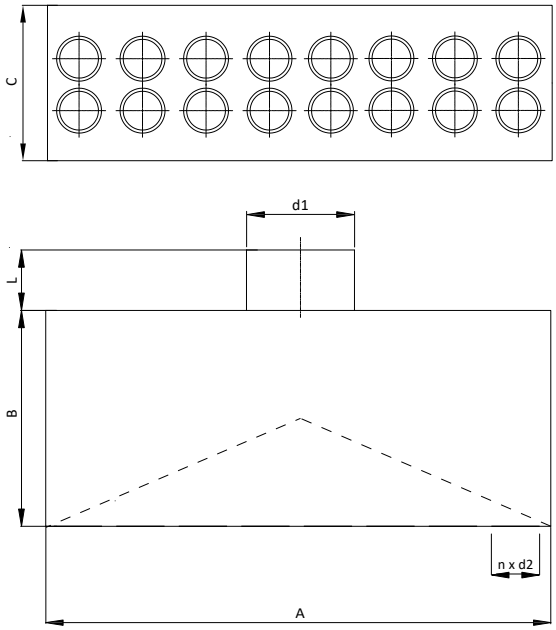

Product code	A [mm]	B [mm]	C [mm]	L [mm]	d_1 [mm]	n [pcs.]	d_2 [mm]
FLX-PRO-R-P-50-2x6-d1	600	180	230	60	80-250	12	50
FLX-PLO-R-P-50-2x8-d1	800	180	230	60	80-250	16	50
FLX-PLO-R-P-50-2x10-d1	1000	180	230	60	80-250	20	50
FLX-PLO-R-P-50-2x12-d1	1200	180	230	60	80-250	24	50

Duct connection spigot d_1: 80, 100, 125, 150, 160, 180, 200, 250 mm.

Choose distribution box according to number of spigots:

FLX-HDPE Ø [mm]	No. of FLX duct connection spigots n [pcs.]	Product code of distribution box
50	12	FLX-PLO-R-P-50-2x6-d1
	16	FLX-PLO-R-P-50-2x8-d1
	20	FLX-PLO-R-P-50-2x10-d1
	24	FLX-PLO-R-P-50-2x12-d1

ALNOR® ventilation system
is a registered trademark protected by a technical patent. All modification rights reserved.

Semi-rigid HDPE oval ducting for single-family home ventilation systems

FLX-HDPE-132-52

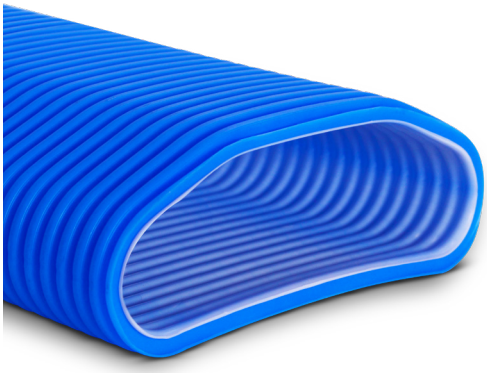

Description

FLX-HDPE-132-52 semi-rigid, oval ducts are intended for ventilation systems in single-family housing projects. FLX-HDPE-132-52 is made of HDPE (high-density polyethylene), a material with crush resistant construction and flexible enough for easy ductwork routing. The 20-metre sections help minimize the number of joints to improve the overall installation airtightness. This is a perfect duct for air distribution in single-family home ventilation systems laid on concrete floors within home insulation voids. The semi-rigid, oval ducting, plenum boxes and fittings make a perfect MHRV system with heat recovery unit. The ducts are joined with the plenum box by fitting onto the male connection ends.



FLX-CS-PVC-132-52 end cap is used for fitting inside the duct, e.g. during the ductwork installation on the construction site - it effectively protects against contamination of the interior of the ducts.

Mechanical compressive strength: 450 N

Antibacterial coating as per ISO 22196:2007
Effective against: Staphylococcus aureus, Eschrichia coli

Lifetime of the antibacterial coating: 30 years

Temperature resistance: combustible; softening point at 130˚C, flash point at 350˚C, class B2.

Product code example

Product code: **FLX - HDPE - 132-52**

type
material
dimension

Dimensions

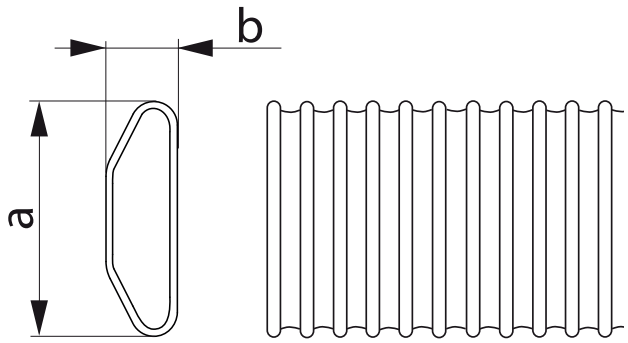

Product code	a [mm]	b [mm]	a_{wewn} [mm]	b_{wewn} [mm]	Bending radius [cm]	
					vertical	horizontal
FLX-HDPE-132-52	132	52	122	38	15	30

Technical data

Pressure loss chart for 1-metre long duct

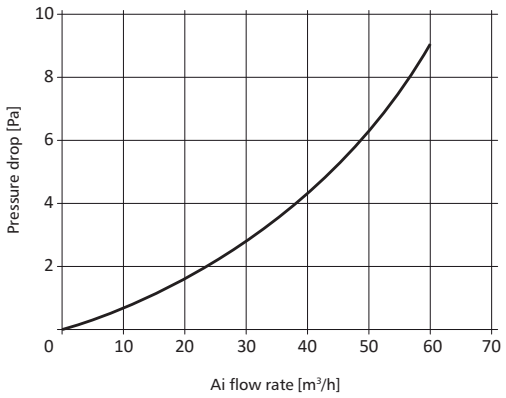

ALNOR® ventilation system
is a registered trademark protected by a technical patent. All modification rights reserved.

Metal plenum box for air supply and exhaust valves

FLX-PRV-...-1-F / FLX-PRV-...-2-F

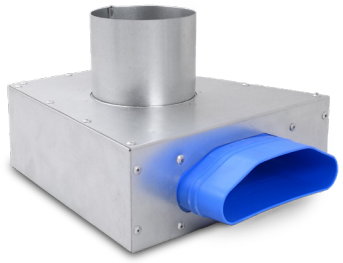

Description

FLX-PRV-...-1-F / FLX-PRV-...-2-F plenum boxes are used for air supply and exhaust valves. The plenum boxes are made from galvanized steel sheet, and plastic oval duct connection spigots that are designed to fit the FLX-HDPE-132-52 semi-rigid oval ducts. The plenum boxes are available with 1 or 2 oval connection spigots and SPIRAL duct connection spigots in diameter: 80 / 110 / 125 mm. Thanks to the low profile of the plenum box, it saves space and is perfect for concealing with cast-in-place concrete.

Available versions: code example FLX-PRV-Ød$_1$-n-F-O

FLX-PRV-125-1	male connection spigot Ød$_1$
FLX-PRV-125-1-F	female connection spigot Ød$_1$
FLX-PRV-125-1-O	male connection spigot Ød$_1$, the spigot inverted by 180°

where:

Ød$_1$	- air valve diameter: 80 / 100 / 125 mm
n	- number of FLX-HDPE132-52 duct connection spigots

Product code example

Product code: **FLX-PRV - 100 - 1 - F -**

type
diameter Ød$_1$
number of spigots
type of connection
male
F - female
O - inverted spigot

Dimensions

FLX-PRV-1-...-F

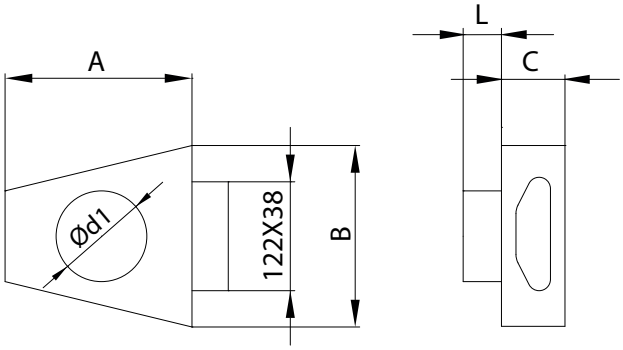

FLX-PRV-2-...-F

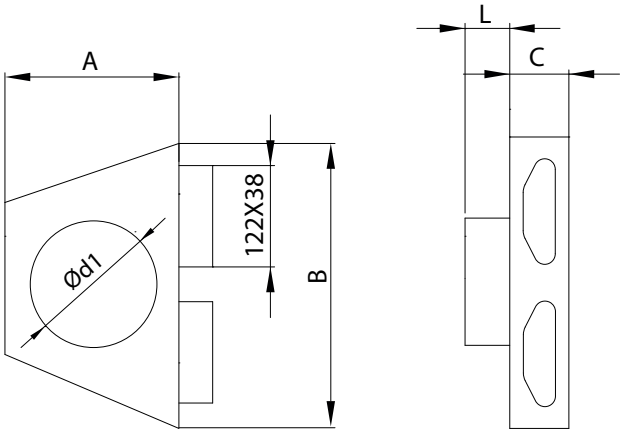

Product code	A [mm]	B [mm]	C [mm]	L [mm]	Ød$_1$ [mm]	n [pcs.]
FLX-PRV-080-1	200	200	70	320	80	1
FLX-PRV-100-1	200	200	70	320	100	1
FLX-PRV-125-1	200	200	70	320	125	1
FLX-PRV-080-2	300	300	70	320	80	2
FLX-PRV-100-2	300	300	70	320	100	2
FLX-PRV-125-2	300	300	70	320	125	2

ALNOR® ventilation system
is a registered trademark protected by a technical patent. All modification rights reserved.

Metal plenum box for air supply and exhaust valves

FLX-PRV-...-1-1

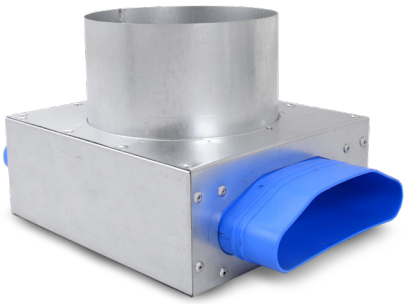

Description

FLX-PRV-...-1-1 plenum boxes for air valves, with oval connection spigots designed to fit HDPE-132-52 ducting. In this plenum box version 2 oval spigots are installed on the opposite sides of the plenum box.

Available versions: example FLX-PRV-Ød$_1$-1-1-F-O
FLX-PRV-125-1-1 male connection spigot Ød$_1$
FLX-PRV-125-1-1-F female connection spigot Ød$_1$
FLX-PRV-125-1-1-O male connection Ød$_1$, the spigot inverted by 180°

where:
Ød$_1$ - air valve diameter100 / 125 mm

Product code example
Product code: **FLX-PRV - 125 - 1-1 - F -**

type
spigot diameter
number of spigots
type of connection
male
F - female
O - inverted spigot

Dimensions

FLX-PRV-1-...-F

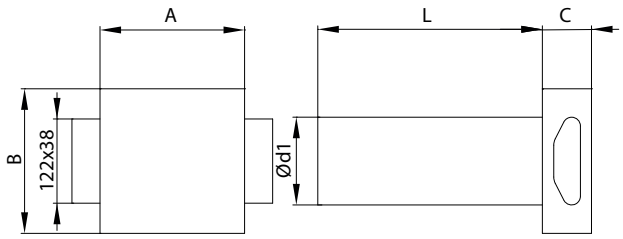

Product code	A [mm]	B [mm]	C [mm]	L [mm]	Ød$_1$ [mm]
FLX-PRV-125-1-1	180	160	70	320	125

ALNOR® ventilation system
is a registered trademark protected by a technical patent. All modification rights reserved.

Distribution box for semi-rigid ducting

FLX-PRV-R

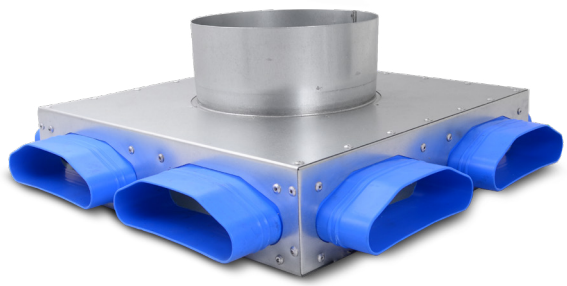

Description

FLX-PRV-R distribution box (manifold) is designed for installation in concrete screed or insulation layer, the distribution box has oval connection spigots that fit FLX-HDPE-132-52 ducting. Depending on the spigot configuration, the distribution box has from 2 to 8 spigots.

Note:
The connection spigot d_1 is male in the standard version. The diameter d_1 is available as a female connection on request, simply add "F" to the product code.

Product code example

Product code: **FLX-PRV-R - 2-2-2-2 - 160 - F**

type
number of spigots
spigot diameter Ød$_1$
type of connection
male
F - female

Dimensions

FLX-PRV-R-2-2-0-0-160

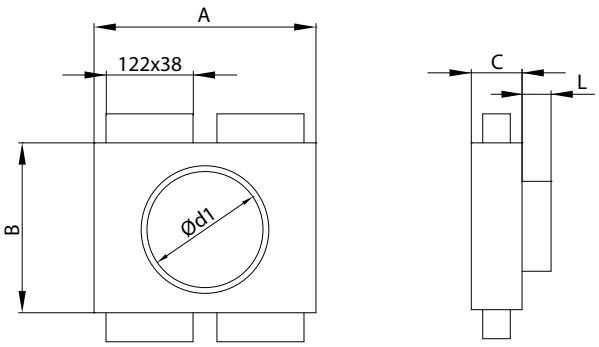

Product code	Number of spigots n [pcs.]	Ød$_1$ [mm]	A [mm]	B [mm]	C [mm]	L [mm]
FLX-PRV-R-2-2-2-2-160	8	160	300	300	70	40
FLX-PRV-R-2-2-2-2-200	8	200	300	300	70	40
FLX-PRV-R-2-2-2-0-160	6	160	300	300	70	40
FLX-PRV-R-2-2-2-0-200	6	200	300	300	70	40
FLX-PRV-R-0-2-2-0-160	4	160	300	300	70	40
FLX-PRV-R-0-2-2-0-200	4	200	300	300	70	40
FLX-PRV-R-2-0-2-0-160	4	160	300	200	70	40
FLX-PRV-R-2-0-2-0-200	4	200	300	200	70	40
FLX-PRV-R-2-0-0-0-160	2	160	300	200	70	40
FLX-PRV-R-2-0-0-0-200	2	200	300	200	70	40

How to order: FLX-PLV-R-1-2-3-4-Ød$_1$

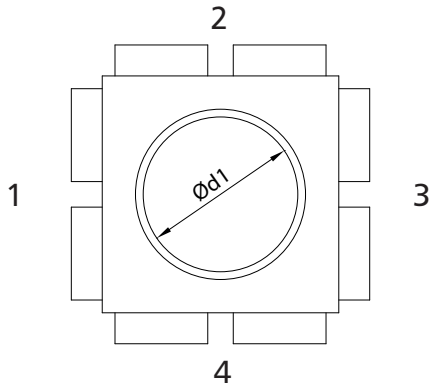

Note!

1-2-3-4	number and configuration of duct connection spigots that fit FLX-HDPE-132-52 ducting
Diameter Ød$_1$	is 160 mm or 200 mm
Spigot Ød$_1$	male with a seal (standard) female - (indicated by "F" in the product code, e.g. FLX-PRV-R-2-2-0-0-160-F)
Z	no spigots (DIY solution - cutting at the construction site

ALNOR® ventilation system
is a registered trademark protected by a technical patent. All modification rights reserved.

Male coupling for FLX-HDPE-132-52 oval semi-rigid ducting

FLX-VNS

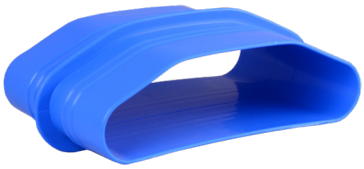

Description

FLX-VNS male couplings are used for joining oval semi-rigid ducts.The plastic couplings are joined with oval ventilation ducting by male connection.
They connect long duct section of the domestic ventilation system with heat recovery.

Product code example
Product code: **FLX-VNS**

type

Dimensions

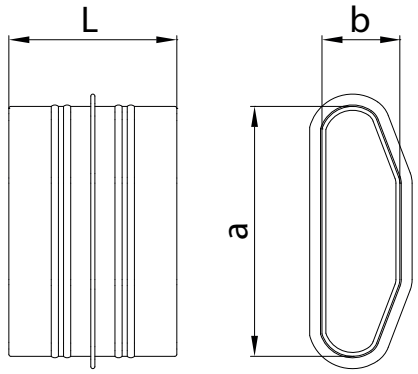

Product code	*a [mm]*	*b [mm]*	*L [mm]*
FLX-VNS	122	38	80

The coupling fits the FLX-HDPE-132-52 ducting.

ALNOR® ventilation system
is a registered trademark protected by a technical patent. All modification rights reserved.

Inverted male coupling for FLX-HDPE-132-52 oval ducting

FLX-VODS

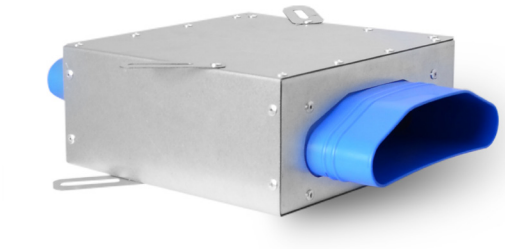

Description

FLX-VODS inverted male coupling for oval semi-rigid ducting. The inverted male coupling joins oval ducting and inverts the profile of one of the ducts. This solution comes in handy when a plenum box for air supply diffusers need to be connected with the intake upward, or when for some reason ductwork must be installed with the profile upside down.

Product code example

Product code: **FLX-VODS**

type

Dimensions

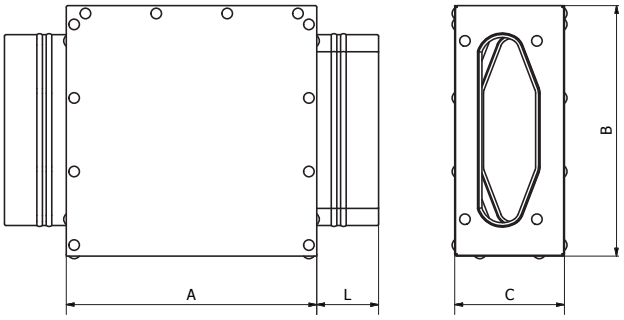

Product code	A [mm]	B [mm]	C [mm]	L [mm]
FLX-VODS-1-1	180	160	70	40

ALNOR® ventilation system
is a registered trademark protected by a technical patent. All modification rights reserved.

Plastic elbow for oval semi-rigid ducting

FLX-VBH/FLX-VBW

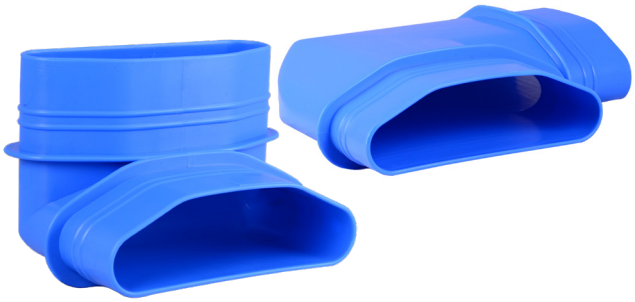

Description

FLX-VBH/FLX-VBW oval plastic elbow have male ends to connect with HDPE semi-rigid oval ducts sized 132-52 mm.



FLX-VBH horizontal elbow 90°:
helps with a very complex routing of ductwork bends which would be impossible to make using only ducting.



FLX-VBW elbow:
enables quick turn upwards of the conducted installation - which is necessary, for example, when running ducts along the floor and then the walls of the room.

Product code example
Product code: **FLX-VBH**

type

Dimensions

FLX-VBH

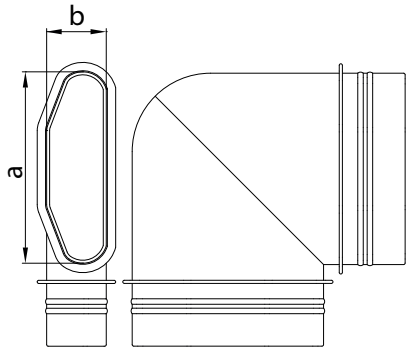

FLX-VBW

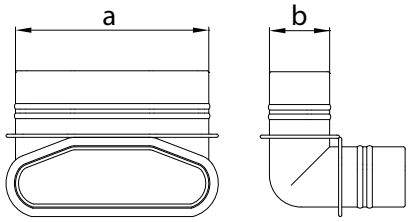

Product code	*a [mm]*	*b [mm]*
FLX-VBH	122	38
FLX-VBW	122	38

Technical data

Pressure loss chart for a 90° elbow

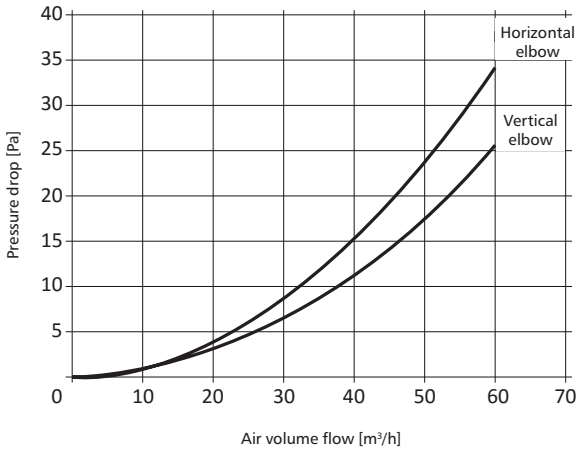

ALNOR® ventilation system
is a registered trademark protected by a technical patent. All modification rights reserved.

Ventilation dampers

ALNOR reserves the right to modify technical specifications in line with the policy of continuous product improvement.

ALNOR® ventilation systems
is a registered trademark protected by a technical patent. All modification rights reserved.

TECHNICAL INFORMATION

System description

Together with matching fittings and ducts, ventilation dampers offer a complete system for building ventilation ductwork. The wide range of types and versions allows adapting the damper solution to virtually all design requirements.

Dimensions

All diameter sizes of round dampers match the SPIRAL®system round fittings. Rectangular damper sizes need to be adjusted to the dimensions of the ductwork and fittings installed. All other sizes are shown in the tables and specifications in the individual Product Data Sheets.

Installation instructions

Round dampers are fastened with self-drilling screws or blind rivets, either of which are driven through the ductwork length overlapping the connection flange inside. Rectangular dampers are fastened with screws at the steel corner straps and with the KLQ G-clamp which couples two flange frames. Both round and rectangular dampers can be provided with actuators for operation of the closure.

Marking

ALNOR products carry the Polish conformity mark B for construction products and product codes as shown in the technical specifications listed in this catalogue.
The SPIRAL®system round dampers made from galvanized steel sheet are provided with the PZH-NIH Hygiene Certificate No. HK/B/0867/01/2009. Rectangular dampers are provided with the PZH-NIH Hygiene Certificate No.:
HK/B/0100/02/2009 (version in galvanized steel sheet);
HK/B/0101/01/2009 (version in stainless steel sheet).

Materials

The dampers are made from galvanized steel sheet.
Other materials are available on request (see the details below for specific damper types):
1.4301/304 stainless steel sheet
1.4404/316L stainless steel sheet, molybdenum enriched

Always indicate the material code in your purchase order. If no material code is specified in the order, the default material will be used, i.e. galvanized steel sheet.

Examples of material codes:
DARH-K-… — 1.4301 / 304
DARH-K-…..-…..-316L — 1.4404 / 316L

Components made from stainless steel have to be inspected at least every 6 months.

Damper sizing

The **SPIRAL®system** meets the tolerance limits given in the table below to provide the required sealing performance.

$Ød_{nom}$ (mm)	e (mm)	tolerance (mm)	
80-315	36	+0	-6
355-400	55	+0	-6
450-630	75	+0	-10

Damper tolerance limits

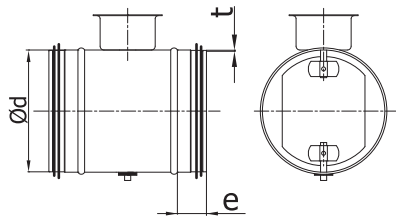

Diameter $Ød_{nom}$ (mm)	min. - max. diameter $Ød_{min}$ - $Ød_{max}$ (mm)	Sheet thickness t_{nom} (mm)
80	78.8 - 79.3	0.5
100	98.8 - 99.3	0.5
125	123.8 - 124.3	0.5
140	138.7 - 139.3	0.5
150	148.7 - 149.3	0.5
160	158.7 - 159.3	0.5
180	178.6 - 179.3	0.5
200	198.6 - 199.3	0.5
224	222.5 - 223.3	0.5
250	248.5 - 249.3	0.5
280	278.4 - 279.3	0.5
300	298.4 - 299.3	0.5
315	313.4 - 314.3	0.5
355	353.3 - 354.3	0.5
400	398.3 - 399.3	0.5
450	448.2 - 449.3	0.5
500	498.2 - 499.3	0.5
560	558.1 - 559.3	0.6
600	598.2 - 599.3	0.6
630	628.1 - 629.3	0.6

ALNOR® ventilation systems
is a registered trademark protected by a technical patent. All modification rights reserved.

Ventilation dampers

TECHNICAL INFORMATION

A leak-proof damper system

The DATL damper system was laboratory-tested. The tests included measurements of the air leak through a closed damper installed in a ductwork, with the test air flow matching the correct air flow direction designed for the damper. All dampers have the correct air flow direction marked on the housing.
The purpose of the laboratory tests was to determine the air tightness class of the dampers.
The measurement method followed the EN 1751 standard test method for DATL-315 dampers.

Air leak test results for the DATL-315 damper:

The table below shows the air leak rates through a closed DATL-315 damper at t_{ot} = 26.1˚C and P_{at} = 1010.6 hPa.

Item No.	P_{duct} *(Pa)*	q_{VLBA} *(l/sm²)*	*Trend line*
1	140	0.25	$P_{duct} = 527.9\ (q_{VLBA})^{0.8989}$
2	249	0.44	
3	311	0.53	
4	443	0.81	
5	514	1.04	
6	853	1.59	
7	960	1.73	
8	1220	2.30	
9	1364	2.72	
10	1570	3.51	
11	1744	4.06	
12	2085	5.15	

P_{duct} — air pressure in the duct
q_{VLBA} — air flow rate

Air tightness chart

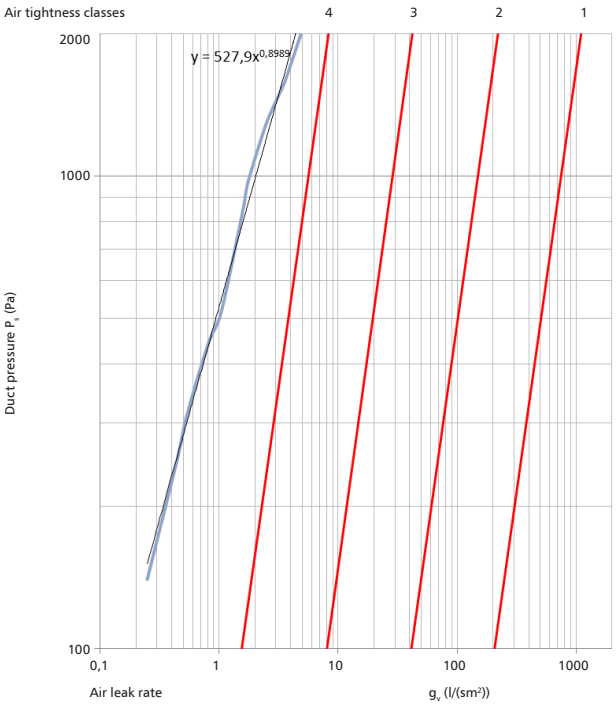

ALNOR® ventilation systems
is a registered trademark protected by a technical patent. All modification rights reserved.

Damper tolerance limits for versions in stainless steel, copper sheet and aluminium sheet

1.4301/304 **components made from sheet metal**		1.4404/316L **components made from sheet metal**	
Diameter $Ød_{nom}$ *(mm)*	*Sheet thickness* t_{nom} *(mm)*	Diameter $Ød_{nom}$ *(mm)*	*Sheet thickness* t_{nom} *(mm)*
80	0.5	80	0.6
100	0.5	100	0.6
112	0.5	112	0.6
125	0.5	125	0.6
140	0.5	140	0.6
150	0.5	150	0.6
160	0.5	160	0.6
180	0.5	180	0.6
200	0.5	200	0.6
224	0.5	224	0.6
250	0.5	250	0.6
280	0.5	280	0.6
300	0.5	300	0.6
315	0.5	315	0.6
355	0.5	355	0.6
400	0.5	400	0.6
450	0.5	450	0.6
500	0.5	500	0.6
560	0.5	560	0.6
600	0.5	600	0.6
630	0.5	630	0.6

Dampers made from 304 or 316L stainless steel are designed for ventilation systems operated in environments involving harsh temperature, humidity or air contaminants inside or outside the ductwork. The compatible damper mechanisms include CV or PVC with the pivot rods made from plastic. The dampers can be manufactured with any of the available damper mechanisms; however, only the housing and the damper closure (without the pivot rods) are manufactured from the specified type of material. All non-return dampers are supplied with the pivot rod(s) made from stainless steel, irrespective of the material code specified. Large dampers, i.e. of diameter 315 mm or greater, can be made with the KKS-KWS damper mechanism if the material ordered is 1.4301 stainless steel sheet.

AW-1050A H24 **components made from sheet metal**		M1-E **components made from sheet metal**	
Diameter $Ød_{nom}$ *(mm)*	*Sheet thickness* t_{nom} *(mm)*	Diameter $Ød_{nom}$ *(mm)*	*Sheet thickness* t_{nom} *(mm)*
80	0.8		
100	0.8		
112	0.8		
125	0.8		
140	0.8		
150	0.8		
160	0.8		
180	0.8		
200	0.8		
224	0.8		
250	0.8		
280	0.8		
300	0.8		
315	0.8		
355	0.8		
400	0.8		
450	0.8		
500	0.8		
560	0.8		
600	0.8		
630	0.8		

Dampers made from copper sheet and aluminium sheet are designed for use as shutoff or regulating dampers in ventilation systems. It is best to order and operate the dampers with a PVC or CV damper mechanism and plastic parts only (without any parts made from galvanized steel). Given the specifics of the damper mechanisms, it is recommended that dampers should have diameters up to 315 mm. If the damper diameter is to be greater than 355 mm, order the DSQW-A aluminium-sheet damper with adapters for connecting with round ducts.

ALNOR® ventilation systems
is a registered trademark protected by a technical patent. All modification rights reserved.

Plastic foam damper

DAT-AKU



Description

The DAT-AKU is an economical and an easy-to-install foam damper/silencer designed for central ventilation systems with attenuating properties. The design and the material the foam damper is made of - namely - non-flammable flexible polyurethane foam (class B2 according to DIN 4102-1) lead to its double function - a damper with an attenuating properties.
Installation instructions: Insert the damper into the circular duct (e.g. before the air valve), then adjust pressure and airflow by removing the number of open holes. In order to obtain better attenuation, install several DAT-AKU foam dampers in series.

Available materials - Product code examples
DAT-AKU-…-50 - 50 mm thick polyurethane foam
DAT-AKU-…-75 - 75mm thick polyurethane foam

Product code example
Product code: **DAT-AKU - 100 - 50**

type
Ød
thickness

Dimensions

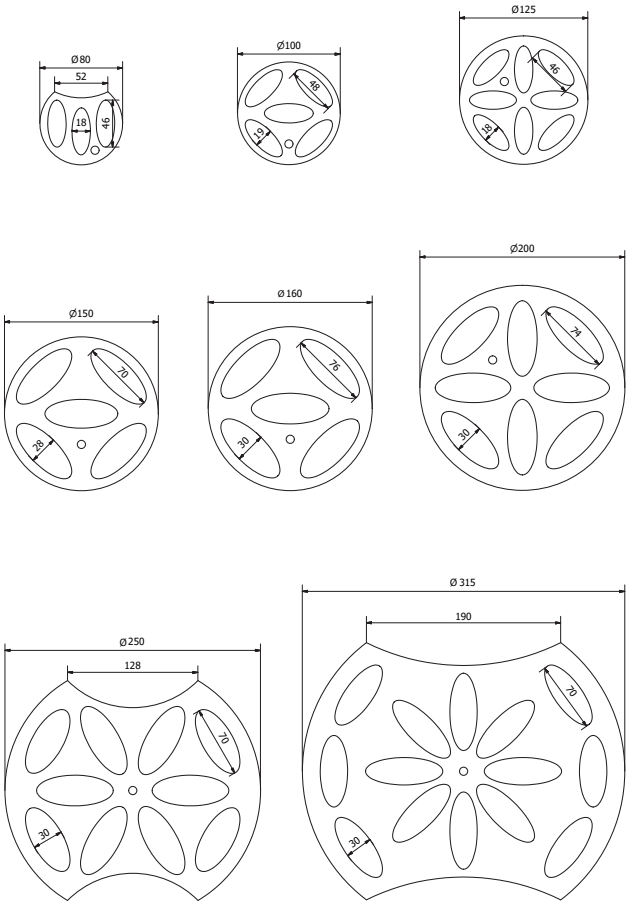

Product code	ød [mm]	Thickness [mm]	Number of holes
DAT-AKU-80	80	50 / 75	3
DAT-AKU-100	100	50 / 75	5
DAT-AKU-125	125	50 / 75	8
DAT-AKU-160	160	50 / 75	5
DAT-AKU-200	200	50 / 75	8
DAT-AKU-250	250	50 / 75	10
DAT-AKU-315	315	50 / 75	14

ALNOR® ventilation systems
is a registered trademark protected by a technical patent. All modification rights reserved.

Plastic foam damper

DAT-AKU

Air flow charts

DAT-AKU-100-50

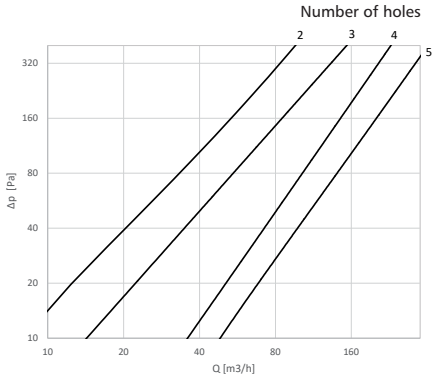

DAT-AKU-100-75

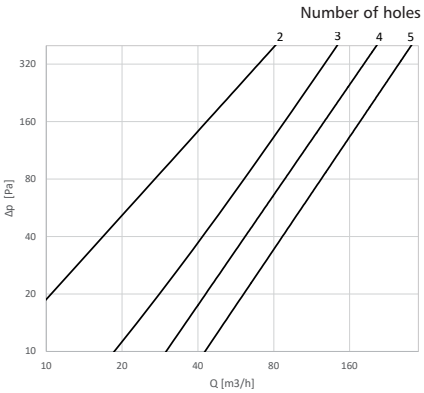

DAT-AKU-125-50

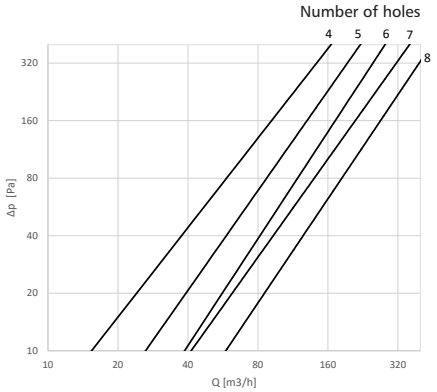

DAT-AKU-125-75

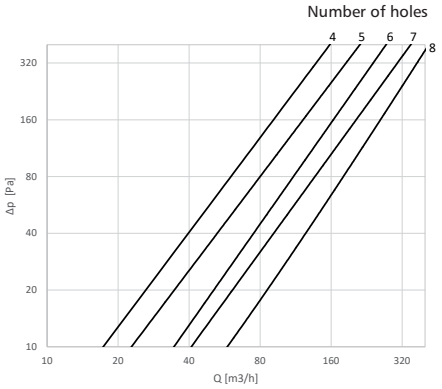

DAT-AKU-160-50

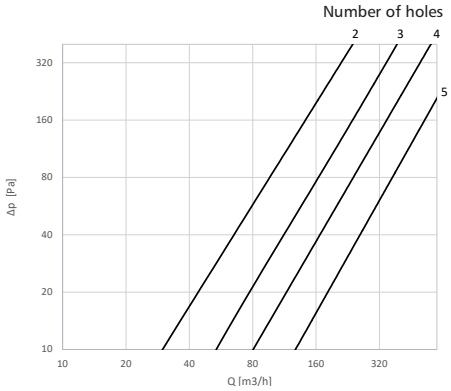

DAT-AKU-160-75

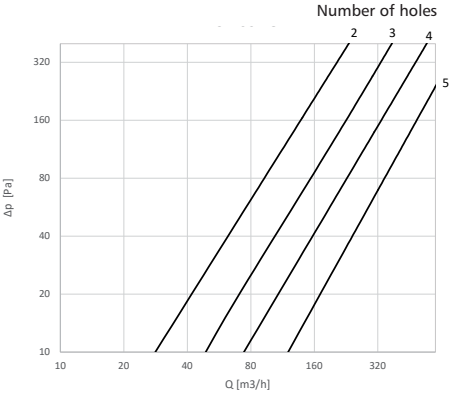

DAT-AKU-200-50

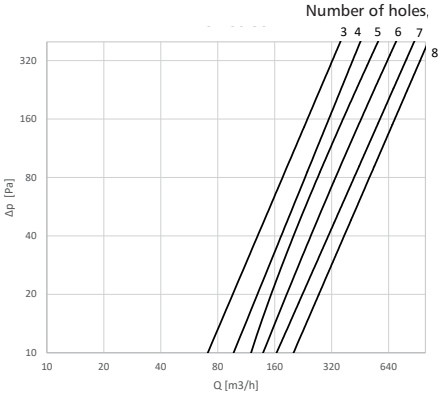

DAT-AKU-200-75

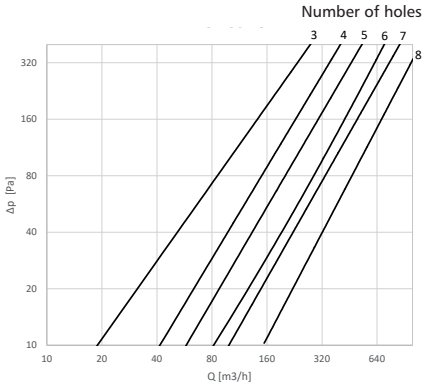

ALNOR® ventilation systems
is a registered trademark protected by a technical patent. All modification rights reserved.

Plastic foam damper

DAT-AKU

Air flow charts

DAT-AKU-250-50

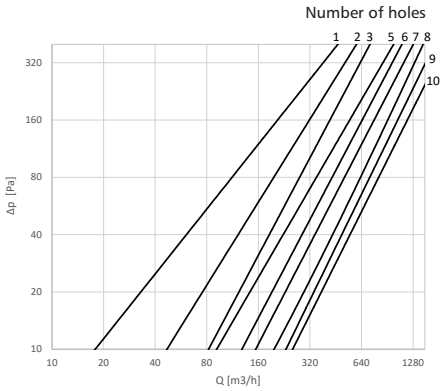

DAT-AKU-250-75

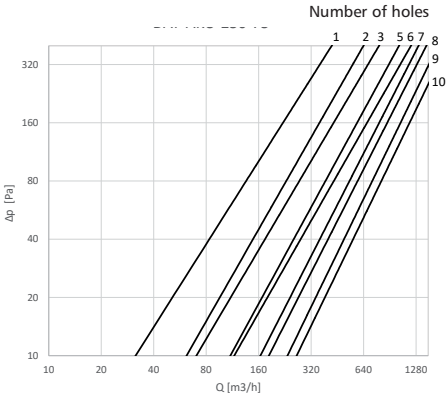

DAT-AKU-315-75

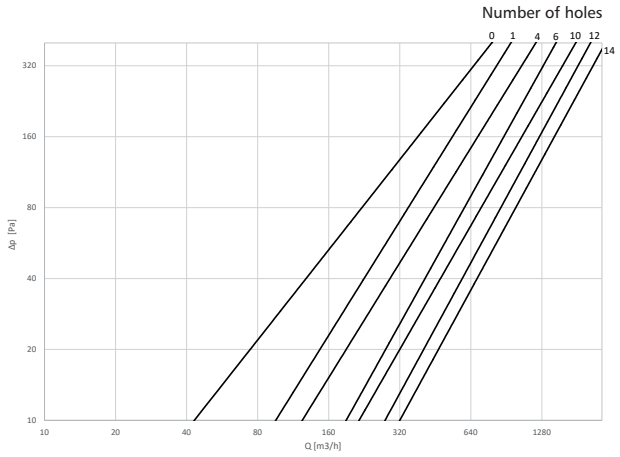

ALNOR® ventilation systems
is a registered trademark protected by a technical patent. All modification rights reserved.

Regulating damper with air tightness class D joints
DARL



Description

The DARL regulating damper with EPDM gaskets at both flange connections has been designed for cladding with up to 50 mm thick insulation.
The damper closure is pivoted on separate square rods. The square rod pivots are replaced with a single solid bar in regulating dampers of diameter 450 mm.
The damper closure position can be read on the 0° to 90° dial of the control handle. Closing the damper closure allows 20% of the rated air flow to pass. The damper closure opening ratio can be fixed with a screw.
All the DARL regulating dampers of diameter 450 mm or greater are supplied complete with the KIT-DS-H damper mechanism control lever.

Available materials - Product code examples
DARL-... - galvanized steel sheet
DAR-PVC-... - galvanized steel sheet

Product code example
Product code: **DARL - aaa**

type
Ød

Dimensions

for d < 355

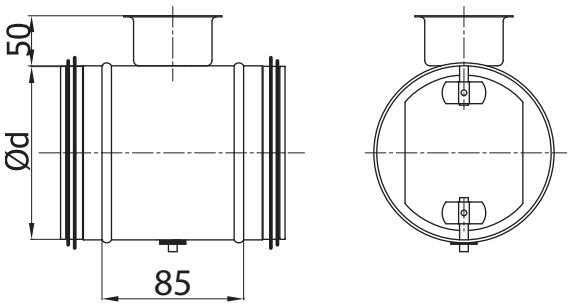

for d ≥ 355

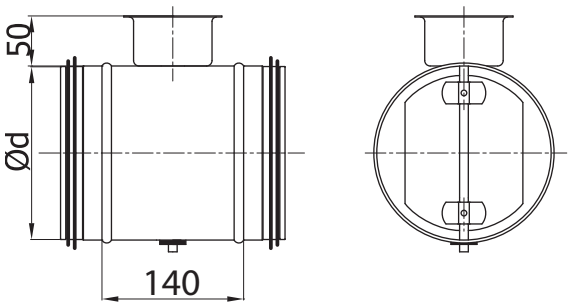

For d < 450, the damper closure pivot is mounted on two short rods;
For d ≥ 450, the damper closure pivot is mounted on a single long bar.

Ød [mm]	*Weight [kg]*
80	0.40
100	0.46
125	0.55
140	0.60
150	0.65
160	0.70
180	0.75
200	0.80
224	0.90
250	1.10
280	1.30
300	1.45
315	1.50
355	2.00
400	2.40
450	3.50
500	4.00
560	4.60
600	5.00
630	5.40

If the damper diameter is greater than 630 mm, order the DASQL multi-blade damper.

ALNOR® ventilation systems
is a registered trademark protected by a technical patent. All modification rights reserved.

Regulating damper

DAR



Description

The DAR dampers for round ducts are available in the diameters of 80 mm to 630 mm. The damper closure has two chord-cut edges to provide 20% of the rated air flow in the closed position. The dampers 450 mm in diameter and larger have the damper closure pivot braced additionally with a single steel bar across the opening. The damper mechanism can be provided with up 50 mm thick insulation and features a control dial to show the opening ratio. The dampers of diameter 450 mm or greater also feature the KIT-DS-H damper mechanism control lever for easier operation.

Available materials - Product code examples
DAR-... - galvanized steel sheet
DAR-K-... - 1.4301/304 stainless steel sheet

Product code example
Product code: **DAR - aaa**

type
Ød

Dimensions

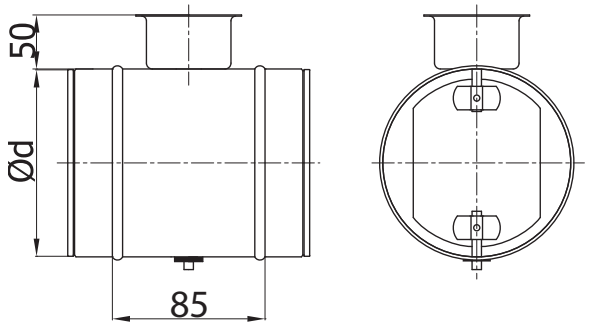

For d < 450, the damper closure pivot is mounted on two short rods;
For d ≥ 450, the damper closure pivot is mounted on a single long bar.

$Ød_{nom}$ [mm]	Weight [kg]
80	0.40
100	0.46
125	0.55
140	0.60
150	0.65
160	0.70
180	0.75
200	0.80
224	0.90
250	1.10
280	1.30
300	1.45
315	1.50
355	2.00
400	2.40
450	3.50
500	4.00
560	4.60
600	5.00
630	5.40

If the damper diameter is to be greater than 630 mm, order the DASQL multi-blade damper.

ALNOR® ventilation systems
is a registered trademark protected by a technical patent. All modification rights reserved.

Round damper

DARH



Description

The DARH dampers regulate the air flow rate in ventilation systems. The damper closure has two chord-cut edges to provide 20% of the rated air flow in the closed position. This damper model is the easiest to install and operate, and the most budget-friendly solution for air flow control in round ductwork systems.

Available materials — Product code examples

DARH-... — galvanized steel sheet

DARH-K-... — 1.4301/304 stainless steel sheet

Product code example

Product code: **DARH - aaa**

type

$Ød_1$

Dimensions

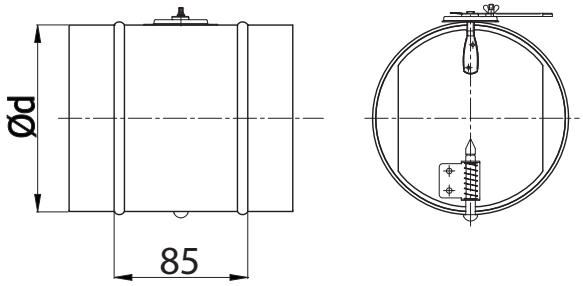

$Ød_{1\ nom}$ (mm)	Weight (kg)
80	0.4
100	0.4
125	0.5
140	0.6
150	0.6
160	0.7
180	0.7
200	0.8
224	0.9
250	1.2
280	1.4
300	1.5
315	1.6

ALNOR® ventilation systems
is a registered trademark protected by a technical patent. All modification rights reserved.

Regulating dampers

DAR-CV



Description

The DAR-CV regulating damper has been designed for cladding with up to 50 mm thick insulation.
The DAR-CV damper closure position can be read on the 0° to 90° dial of the control handle. Closing the damper closure allows 20% of the rated air flow to pass. The damper closure opening ratio can be fixed with a screw.

Available materials - Product code examples
DAR-CV-... - galvanized steel sheet

Product code example
Product code: **DAR-CV - aaa**

type
Ød

Dimensions

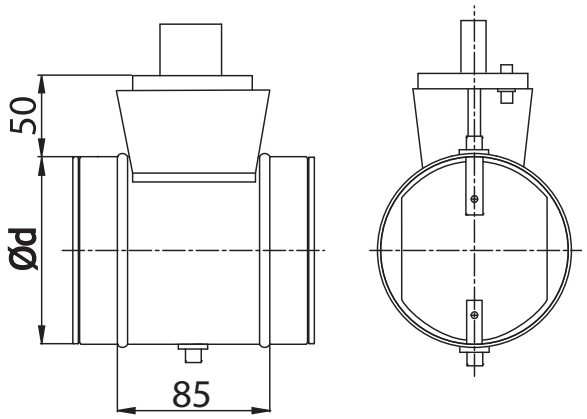

Ød [mm]	Weight [kg]
80	0.40
100	0.46
125	0.55
140	0.60
150	0.65
160	0.70
180	0.75
200	0.80
224	0.90
250	1.10
280	1.30
300	1.45
315	1.50
355	2.00
400	2.60

ALNOR® ventilation systems
is a registered trademark protected by a technical patent. All modification rights reserved.

Regulating dampers

DAR-PVC



Description

The DAR-PVC regulating damper has been designed for cladding with up to 30 mm thick insulation.
The DAR-PVC damper closure position can be read on the 0° to 90° dial of the control handle. Closing the damper closure allows 20% of the rated air flow to pass. The damper closure opening ratio can be fixed with a screw.

Available materials - Product code examples

DAR-PVC-... - galvanized steel sheet

DAR-PVC-K-... - 1.4301/304 stainless steel sheet

Product code example

Product code: **DAR-PVC - aaa**

type

Ød

Dimensions

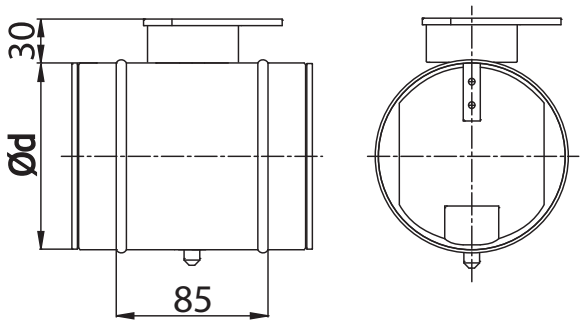

Ød [mm]	Weight [kg]
80	0.40
100	0.46
125	0.55
140	0.60
150	0.65
160	0.70
180	0.75
200	0.80
224	0.90
250	1.10
280	1.30
300	1.45
315	1.50

ALNOR® ventilation systems
is a registered trademark protected by a technical patent. All modification rights reserved.

Regulating dampers
DARL/DAR

Technical specifications

Pressure loss and sound level charts to help with the product selection.

Solid lines show the overall pressure loss across a damper vs. the air flow rate and the damper closure opening angle. The curve shows the A-weighed sound level value, L_w (A), in dB, inside a connected duct.

Example:
Diameter Ø: 100
Air flow rate: 60 l/s
Pressure loss: 200 Pa

The following information can be read from the charts:
Opening angle: 40°
Sound level: 62 dB(A)

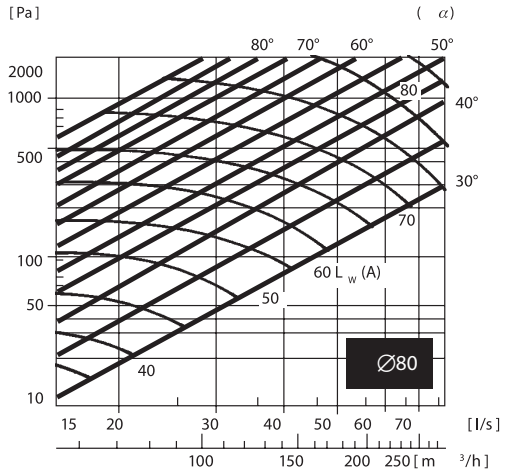

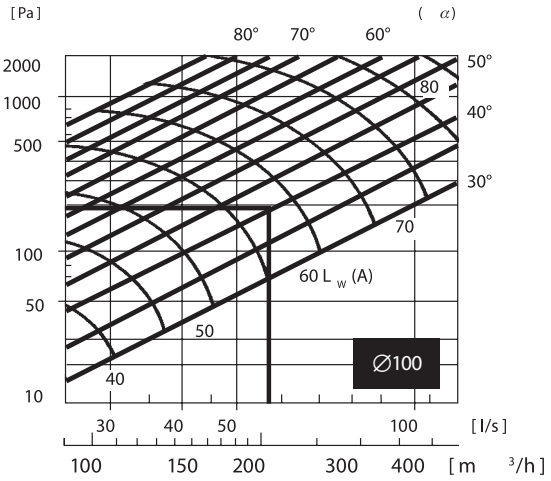

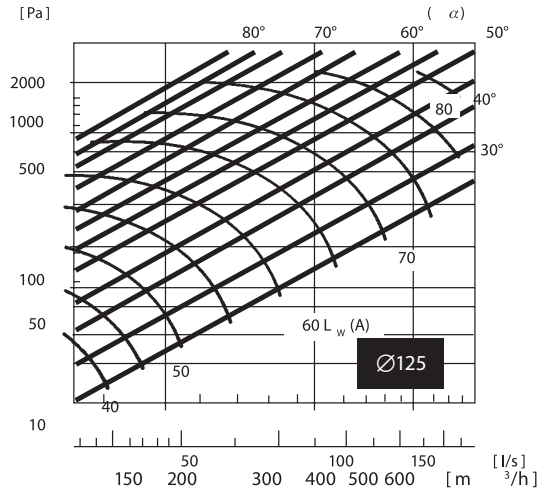

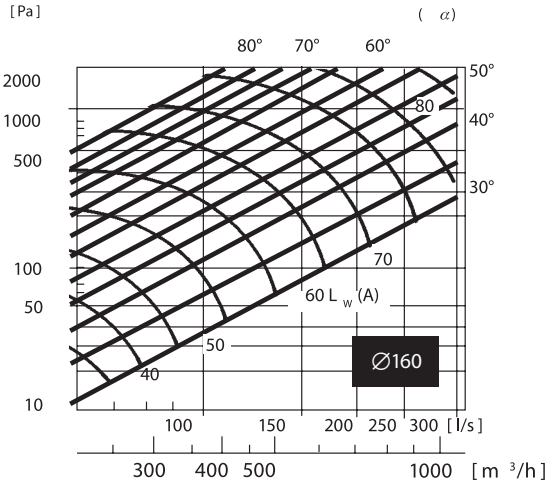

ALNOR® ventilation systems
is a registered trademark protected by a technical patent. All modification rights reserved.

DARL/DAR

Technical specifications

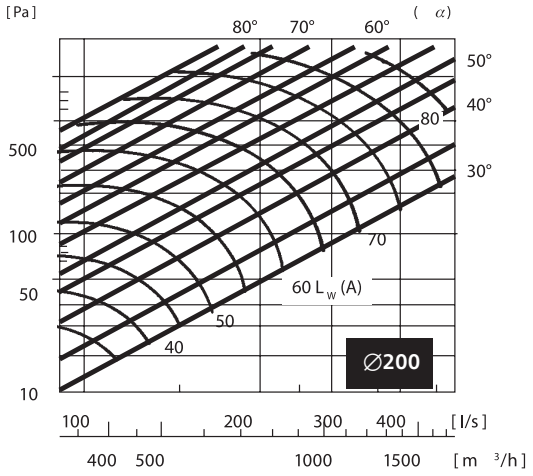

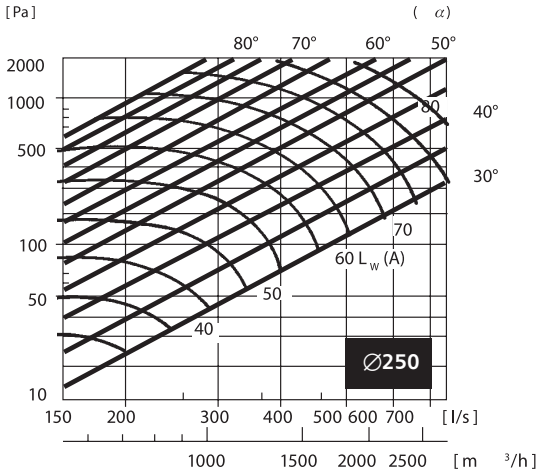

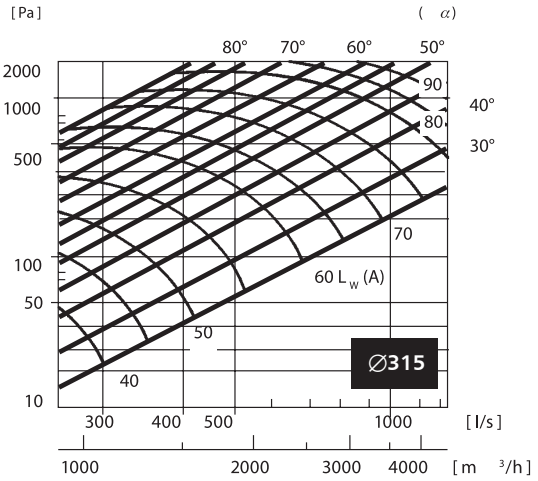

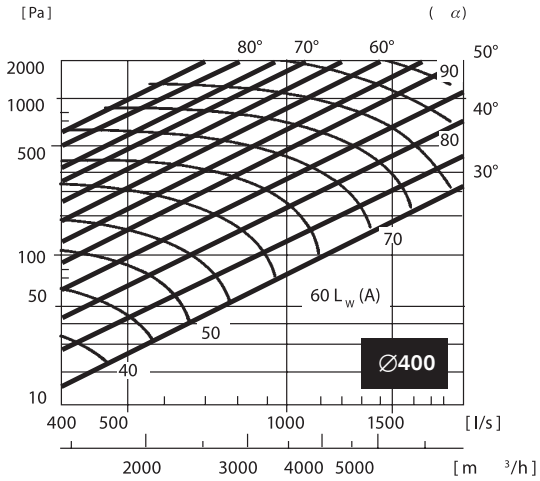

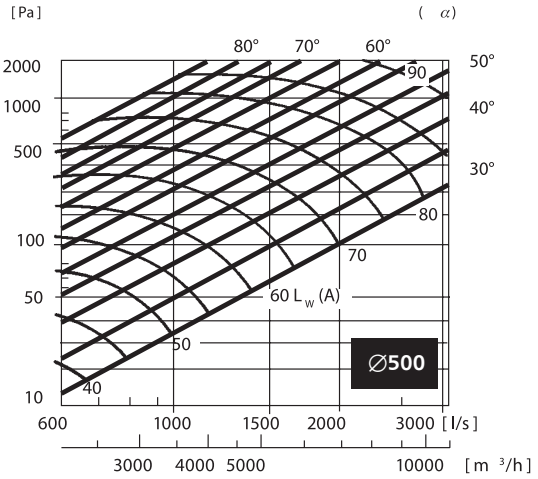

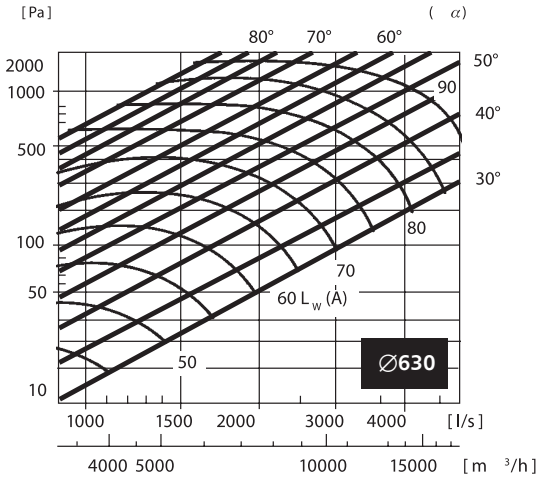

ALNOR® ventilation systems
is a registered trademark protected by a technical patent. All modification rights reserved.

Regulating dampers

DARL/DAR

Technical specifications

Sound performance specifications for DARL dampers
Sound level L_w (dB) in 63-8000 Hz octave bands vs. diameter, air flow rate and pressure loss.

diameter (mm)	pressure loss (Pa)	mean velocity: 3 m/s frequency (Hz)								mean velocity: 6 m/s frequency (Hz)								mean velocity: 9 m/s frequency (Hz)								mean velocity: 12 m/s frequency (Hz)								mean velocity: 15 m/s frequency (Hz)							
		63	125	250	500	1k	2k	4k	8k	63	125	250	500	1k	2k	4k	8k	63	125	250	500	1k	2k	4k	8k	63	125	250	500	1k	2k	4k	8k	63	125	250	500	1k	2k	4k	8k
		air flow rate: 15 l/s								air flow rate: 30 l/s								air flow rate: 45 l/s								air flow rate: 60 l/s								air flow rate: 75 l/s							
80	500	65	65	65	65	59	55	49	46	67	67	67	67	60	57	50	47	70	70	70	70	63	60	53	49	75	75	75	75	68	64	56	53	80	80	80	80	72	68	60	56
	300	63	63	60	60	54	48	42	36	66	66	63	63	56	50	44	38	70	70	67	67	60	54	47	40	75	75	71	71	64	57	50	43	79	79	75	75	68	60	53	45
	200	63	63	60	54	51	43	34	29	65	65	62	56	53	44	35	30	70	70	67	60	57	48	38	32	75	75	71	65	61	51	41	34	–	–	–	–	–	–	–	–
	100	55	60	53	48	43	30	23	15	59	65	57	51	46	32	24	16	66	72	63	57	51	36	27	18	–	–	–	–	–	–	–	–	–	–	–	–	–	–	–	–
	50	56	54	47	43	36	25	16	9	59	59	52	47	40	27	17	10	–	–	–	–	–	–	–	–	–	–	–	–	–	–	–	–	–	–	–	–	–	–	–	–
		air flow rate: 25 l/s								air flow rate: 50 l/s								air flow rate: 75 l/s								air flow rate: 100 l/s								air flow rate: 120 l/s							
100	500	67	64	64	57	54	48	48	48	72	68	68	62	59	52	52	52	78	75	75	67	64	57	57	57	84	81	80	72	68	62	61	61	88	85	84	76	72	65	64	64
	300	62	61	60	54	51	45	42	42	68	68	68	59	56	50	47	47	75	74	73	65	61	54	51	51	81	80	79	70	67	59	56	55	86	85	84	74	70	62	59	58
	200	58	58	58	50	48	40	37	37	65	65	64	57	54	45	42	42	74	73	73	64	59	50	47	46	80	80	79	69	66	55	51	51	–	–	–	–	–	–	–	–
	100	58	55	53	46	41	34	26	24	68	66	62	54	48	40	31	29	79	75	71	62	56	46	36	33	–	–	–	–	–	–	–	–	–	–	–	–	–	–	–	–
	50	55	53	48	42	35	26	22	18	69	67	60	53	44	33	28	22	–	–	–	–	–	–	–	–	–	–	–	–	–	–	–	–	–	–	–	–	–	–	–	–
		air flow rate: 40 l/s								air flow rate: 80 l/s								air flow rate: 120 l/s								air flow rate: 160 l/s								air flow rate: 180 l/s							
125	500	71	68	65	59	56	50	50	47	76	73	70	63	60	53	53	50	83	79	76	68	65	58	58	54	89	85	81	73	69	62	62	58	91	87	83	75	71	63	63	59
	300	66	66	60	55	52	46	43	40	73	73	67	60	57	51	48	44	79	79	72	66	62	55	52	48	86	86	79	71	68	60	56	53	89	88	81	73	69	62	58	54
	200	65	62	57	51	46	41	38	38	74	71	65	59	53	47	43	43	82	78	71	65	58	51	48	48	89	85	78	70	63	56	52	52	–	–	–	–	–	–	–	–
	100	64	59	53	47	39	34	29	27	77	70	63	55	47	40	35	32	84	78	70	61	51	45	39	35	–	–	–	–	–	–	–	–	–	–	–	–	–	–	–	–
	50	63	54	50	41	36	27	25	20	80	68	60	51	43	34	32	26	–	–	–	–	–	–	–	–	–	–	–	–	–	–	–	–	–	–	–	–	–	–	–	–
		air flow rate: 60 l/s								air flow rate: 120 l/s								air flow rate: 180 l/s								air flow rate: 240 l/s								air flow rate: 300 l/s							
160	500	68	67	64	59	55	53	52	51	72	71	68	62	59	55	54	53	78	77	74	67	63	60	59	58	84	84	80	72	68	65	65	65	89	89	85	77	73	69	69	69
	300	63	62	59	55	52	49	46	45	67	66	64	58	55	52	49	48	75	75	71	65	61	58	54	54	81	81	78	70	67	63	59	59	87	87	83	76	72	68	64	64
	200	58	56	50	48	42	40	40	68	65	62	56	53	47	44	44	76	73	69	63	59	53	50	50		84	80	77	69	66	58	55	55	–	–	–	–	–	–	–	–
	100	59	54	50	45	40	35	33	31	70	64	60	53	48	42	39	38	77	73	69	61	54	48	45	44	–	–	–	–	–	–	–	–	–	–	–	–	–	–	–	–
	50	54	50	46	37	33	29	25	25	69	64	58	48	42	37	32	32	–	–	–	–	–	–	–	–	–	–	–	–	–	–	–	–	–	–	–	–	–	–	–	–
		air flow rate: 100 l/s								air flow rate: 200 l/s								air flow rate: 300 l/s								air flow rate: 400 l/s								air flow rate: 450 l/s							
200	500	70	64	61	55	52	52	55	55	75	68	65	59	55	55	59	59	83	76	72	65	61	61	65	65	90	82	78	72	67	66	71	70	93	85	81	73	71	70	74	73
	300	67	62	56	50	48	45	48	48	74	68	62	55	52	51	53	52	84	78	71	64	61	57	60	60	92	84	78	71	67	63	67	66	95	87	81	72	68	66	69	68
	200	62	57	55	47	44	42	42	42	71	65	62	53	50	48	47	47	83	76	71	62	58	55	54	54	90	83	79	69	65	62	61	60	–	–	–	–	–	–	–	–
	100	57	52	48	41	39	36	34	34	69	64	58	50	47	44	42	42	83	76	69	59	56	53	50	50	–	–	–	–	–	–	–	–	–	–	–	–	–	–	–	–
	50	51	45	41	36	32	32	28	28	63	56	51	44	39	39	34	34	–	–	–	–	–	–	–	–	–	–	–	–	–	–	–	–	–	–	–	–	–	–	–	–
		air flow rate: 150 l/s								air flow rate: 300 l/s								air flow rate: 450 l/s								air flow rate: 600 l/s								air flow rate: 750 l/s							
250	500	69	66	59	53	50	54	53	52	71	67	61	56	53	56	55	54	78	75	68	61	58	61	60	59	87	83	76	68	64	68	68	68	94	90	82	74	70	74	74	74
	300	63	61	55	50	47	46	48	47	66	63	57	51	48	47	51	48	75	72	65	59	55	55	59	55	84	80	73	67	65	64	62	61	91	87	80	72	70	69	72	68
	200	59	57	52	46	44	41	44	44	63	60	55	49	46	44	46	46	72	69	63	57	55	54	54	53	82	79	72	64	63	63	62	61	–	–	–	–	–	–	–	–
	100	56	52	45	41	38	36	34	31	63	57	51	45	43	40	38	35	75	69	60	56	52	49	45	42	–	–	–	–	–	–	–	–	–	–	–	–	–	–	–	–
	50	52	48	40	38	34	30	28	24	61	56	47	45	40	38	33	28	–	–	–	–	–	–	–	–	–	–	–	–	–	–	–	–	–	–	–	–	–	–	–	–
		air flow rate: 250 l/s								air flow rate: 500 l/s								air flow rate: 750 l/s								air flow rate: 1000 l/s								air flow rate: 1200 l/s							
315	500	68	65	59	53	50	50	53	50	74	71	65	58	55	55	58	55	82	78	71	64	60	60	54	60	89	85	77	69	68	67	69	65	92	88	80	72	71	70	72	68
	300	62	59	54	49	46	45	49	43	69	66	60	54	51	51	54	48	78	74	68	61	57	57	61	54	85	81	74	66	64	64	66	59	89	85	78	70	68	68	70	62
	200	60	55	50	45	43	40	43	40	70	64	58	52	49	48	49	46	79	72	66	59	58	57	56	52	86	79	72	65	63	62	64	58	–	–	–	–	–	–	–	–
	100	54	52	45	41	38	36	36	31	66	63	55	50	47	46	44	39	76	72	64	57	54	52	50	44	–	–	–	–	–	–	–	–	–	–	–	–	–	–	–	–
	50	49	49	43	38	34	32	30	24	64	64	56	49	45	42	40	32	–	–	–	–	–	–	–	–	–	–	–	–	–	–	–	–	–	–	–	–	–	–	–	–
		air flow rate: 400 l/s								air flow rate: 800 l/s								air flow rate: 1200 l/s								air flow rate: 1600 l/s								air flow rate: 1800 l/s							
400	500	79	73	67	62	57	60	59	58	82	75	68	65	59	62	61	60	88	81	74	70	62	66	65	64	95	87	79	75	67	71	70	69	98	90	82	78	70	74	73	72
	300	72	66	60	54	51	51	51	51	77	70	64	58	56	55	54	54	84	77	70	63	62	61	60	60	91	83	76	69	67	66	65	64	94	86	79	71	70	69	68	67
	200	67	62	56	50	48	48	48	45	74	68	62	56	53	52	52	49	82	75	68	61	60	59	58	54	89	82	75	69	67	64	63	60	–	–	–	–	–	–	–	–
	100	61	56	49	44	42	39	39	34	72	66	58	53	49	47	46	40	83	76	67	60	58	55	53	47	–	–	–	–	–	–	–	–	–	–	–	–	–	–	–	–
	50	57	52	44	39	37	35	34	26	72	67	56	50	47	44	44	33	–	–	–	–	–	–	–	–	–	–	–	–	–	–	–	–	–	–	–	–	–	–	–	–
		air flow rate: 600 l/s								air flow rate: 1200 l/s								air flow rate: 1800 l/s								air flow rate: 2400 l/s								air flow rate: 3000 l/s							
500	500	84	77	70	64	63	62	61	60	85	78	71	65	64	63	62	61	91	84	76	68	67	68	68	67	96	88	80	72	70	73	72	71	102	94	85	78	75	77	77	76
	300	77	70	64	58	54	54	58	58	80	74	67	60	57	57	60	60	88	80	73	66	62	62	66	66	93	85	78	70	66	66	70	70	99	91	83	74	70	70	74	74
	200	71	65	59	53	50	50	50	47	77	70	64	58	56	55	54	51	85	78	72	65	63	61	60	57	91	84	76	70	68	66	65	61	–	–	–	–	–	–	–	–
	100	63	58	53	47	46	44	42	37	72	66	60	55	53	51	49	43	82	75	70	63	60	57	55	50	–	–	–	–	–	–	–	–	–	–	–	–	–	–	–	–
	50	59	52	47	44	42	38	38	31	71	63	57	54	51	46	46	37	–	–	–	–	–	–	–	–	–	–	–	–	–	–	–	–	–	–	–	–	–	–	–	–
		air flow rate: 1000 l/s								air flow rate: 2000 l/s								air flow rate: 3000 l/s								air flow rate: 4000 l/s								air flow rate: 4500 l/s							
630	500	88	80	73	69	66	64	63	62	90	83	75	71	68	67	65	64	96	88	80	76	72	72	70	68	103	95	86	82	77	77	76	73	107	98	90	85	81	81	80	76
	300	82	75	69	65	62	61	58	55	84	77	70	67	63	62	61	56	92	84	77	73	69	68	68	61	100	91	83	79	75	75	74	66	105	96	88	83	79	79	79	70
	200	78	72	65	62	59	55	55	49	80	74	67	64	60	57	57	50	89	82	75	71	67	63	63	56	98	90	82	78	74	70	70	62	–	–	–	–	–	–	–	–
	100	71	66	59	54	50	46	45	40	78	71	66	59	56	49	47	44	90	82	76	68	63	58	55	50	–	–	–	–	–	–	–	–	–	–	–	–	–	–	–	–
	50	66	58	53	48	43	40	39	30	77	68	62	57	51	45	48	36	–	–	–	–	–	–	–	–	–	–	–	–	–	–	–	–	–	–	–	–	–	–	–	–

ALNOR® ventilation systems
is a registered trademark protected by a technical patent. All modification rights reserved.

Round shutoff damper

DASL



Description

The DASL shutoff damper with EPDM gaskets at both flange connections is designed for cladding with up to 50 mm thick insulation.
The DASL shutoff damper is a good choice when the ductwork closure does not have to be fully airtight. The damper closure position can be read on the 0° to 90° dial of the control handle. The damper closure opening ratio can be fixed with a screw.
All the DASL dampers of diameter 355 mm or greater have the damper closure pivot provided with extra bracing.
All the DASL dampers of diameter 450 mm or greater are supplied with the KIT-DS-H damper mechanism control lever.
Standard dampers are made from galvanized steel sheet.

Available materials - Product code examples
DASL-... - galvanized steel sheet
DASL-K-... - 1.4301/304 stainless steel sheet

Product code example
Product code: **DASL - aaa**

type
Ød$_1$

Dimensions

For d_1 < 355, the damper closure pivot is mounted on two short rods.

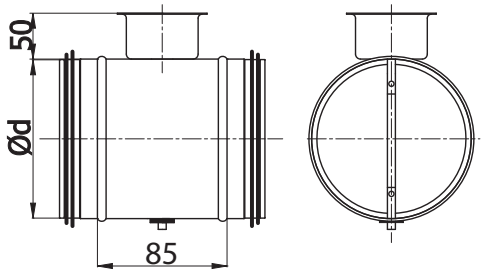

For d_1 ≥ 355, the damper closure pivot is mounted a single long bar.

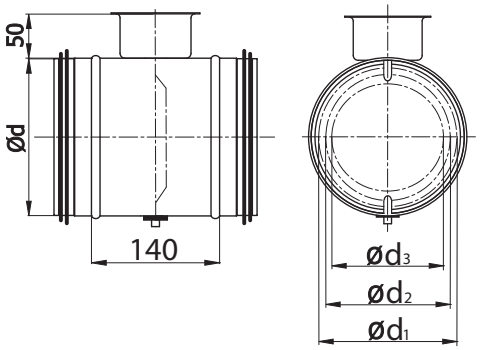

Ød $_{nom}$ (mm)	Ød$_{1\ nom}$ (mm)	Ød$_{2\ nom}$ (mm)	Ød$_{3\ nom}$ (mm)	Weight (kg)
80*	–	–	–	0.40
100*	–	–	–	0.45
125*	–	–	–	0.55
140*	–		–	0.60
150*	–	–	–	0.65
160*	–	–	–	0.70
180*	–	–	–	0.75
200*	–	–	–	0.80
224*	–	–	–	0.90
250*	–	–	–	1.20
280*	–	–	–	1.40
300*	–	–	–	1.50
315*	–	–	–	1.60
355**	330	295	263	2.70
400**	330	295	263	3.30
450**	370	337	293	4.50
500**	370	337	293	5.00
560**	490	457	413	6.30
600**	490	457	413	6.70
630**	490	457	413	7.20

*with a press-formed damper closure
** with a damper closure & pivot bracing
If the damper diameter is to be greater than 630 mm, order the DASQL multi-blade damper.

ALNOR® ventilation systems
is a registered trademark protected by a technical patent. All modification rights reserved.

Round shutoff damper

DASL

Technical specifications

Numbers shown on the diagrams represent the damper blade position according to pictures below:

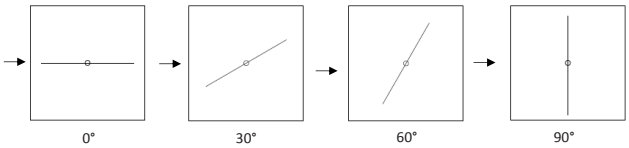

Q [m³/h] - air flow calculated form air velocity and a duct cross-section

Δp [Pa] - pressure loss measured before and after the damper

DASL 100

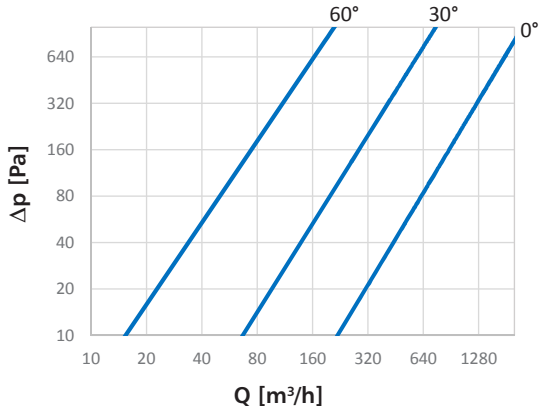

DASL 125

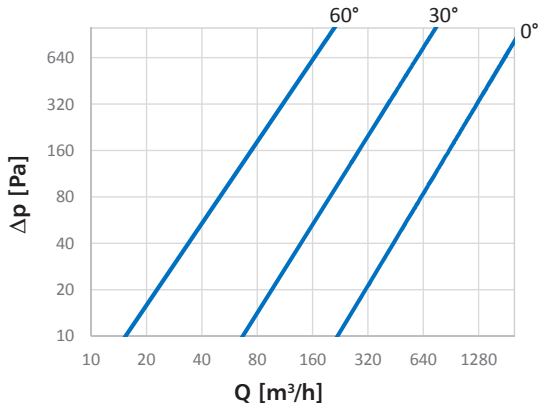

DASL 160

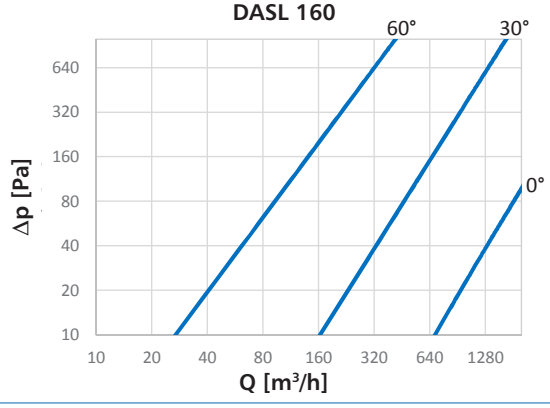

DASL 200

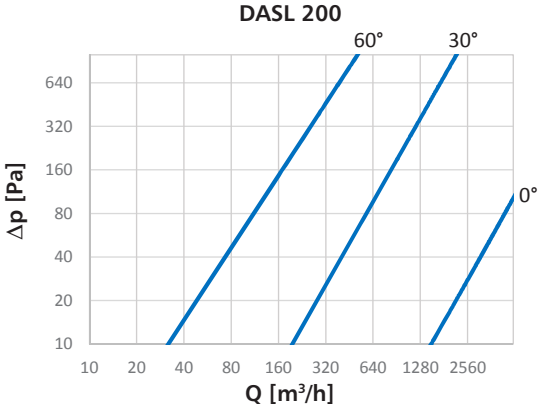

DASL 250

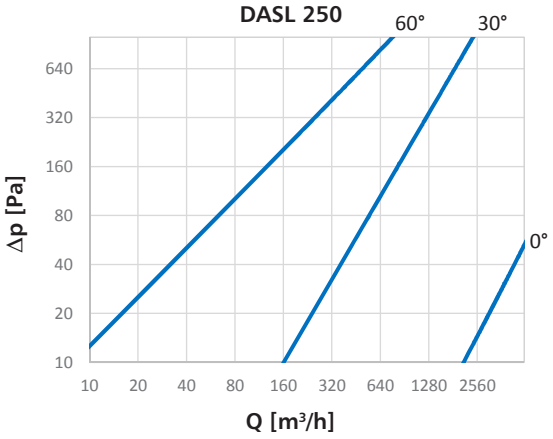

DASL 315

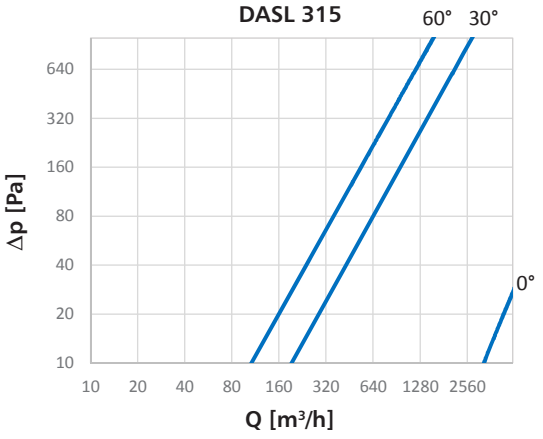

ALNOR® ventilation systems
is a registered trademark protected by a technical patent. All modification rights reserved.

Reinforced round shutoff damper

DASL-B / DAS-B



Description

The DASL-B shutoff damper with EPDM gaskets is designed for cladding with up to 50 mm thick insulation. The damper closure angle range is 0° to 90° and can be read on the handle dial. The differences in design regarding a standard DASL are: additional folding in the housing, reinforcements on the damper blade, thicker hinge rod (12x12mm), brass bearings. Used materials provide temperature resistance up to 110°C (200°C for DAS-B without gasket).

Available materials - Product code examples
DASL-B-... - galvanized steel sheet
DASL-B-K-... - 1.4404 / 316L stainless steel sheet

Product code example
Product code: **DASL-B - aaa**

type
Ød

Dimensions

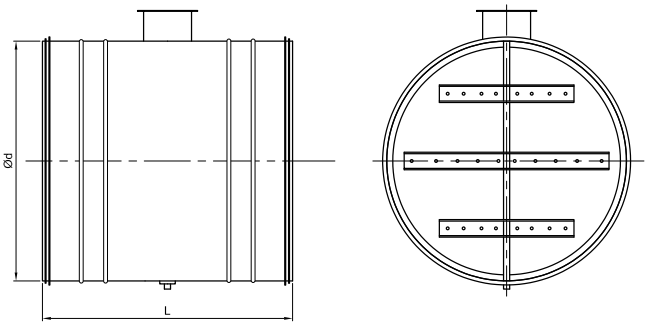

Ød [mm]	L [mm]	Weight [kg]
100	200	1.00
125	200	1.08
140	200	1.14
160	200	1.24
200	200	1.40
224	200	1.49
250	200	1.61
280	200	1.77
315	265	2.21
355	265	2.47
400*	265	4.58
450*	305	5.85
500*	400	7.78
560*	400	8.76
630*	500	11.62
710*	600	15.39
800*	600	17.50
900*	600	19.96
1000*	600	22.49

*bumpers added

ALNOR® ventilation systems
is a registered trademark protected by a technical patent. All modification rights reserved.

Shutoff damper with actuator mounting

DASL-CV



Description

The DASL-CV shutoff damper with EPDM gaskets at both flange connections is designed for cladding with up to 50 mm thick insulation.
The DASL-CV shutoff damper is a good choice when the ductwork closure does not have to be fully airtight. The damper closure position can be read on the 0° to 90° dial of the control handle. The damper closure opening ratio can be fixed with a screw.
The DASL-CV shutoff damper can be easily adapted for mounting Belimo power actuators. The power actuator must be compatible with the 8x8 mm square bar.
The product has safe edges.

Available materials - Product code examples

DASL-CV-...	- galvanized steel sheet
DASL-CV-K-...	- 1.4301/304 stainless steel sheet
DASL-CV-K-...-316L	- 1.4404/316L stainless steel sheet
DASL-CV-A-...	- aluminium sheet*
DASL-CV-CU-...	- copper sheet

*KIT-DS.-CV-K damper mechanism

Product code example

Product code: **DASL-CV - aaa**

type
Ød

Dimensions

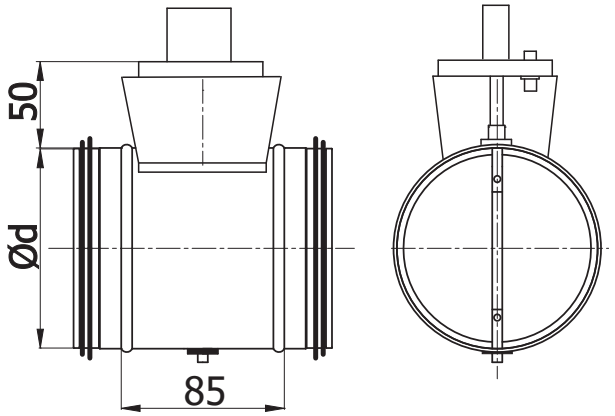

Ød [mm]	Weight [kg]
80	0.40
100	0.45
125	0.55
140	0.60
150	0.65
160	0.70
180	0.75
200	0.80
224	0.90
250	1.20
280	1.40
300	1.50
315	1.60
355	2.00
400	2.60

ALNOR® ventilation systems
is a registered trademark protected by a technical patent. All modification rights reserved.

Round damper for Lamella Mat cladding
DAS



Description

The DAS dampers are designed for cladding with up to 50 mm thick insulation.
The DAS damper is a good choice when the ductwork closure does not have to be fully airtight. The damper closure position can be read on the 0° to 90° dial of the control handle. The damper closure opening ratio can be fixed with a screw. The product has safe edges.
All the DAS dampers of diameter 355 mm or greater have the damper closure pivot provided with extra bracing.
All the DAS dampers of diameter 450 mm or greater are supplied with the KIT-DS-H damper mechanism control lever.
Standard dampers are made from galvanized steel sheet.

Available materials - Product code examples
DAS-... - galvanized steel sheet
DAS-K-...- 1.4301/304 stainless steel sheet

Product code example
Product code: **DAS - aaa**

type
Ød

Dimensions

For d < 355, the damper closure pivot is mounted on two short rods.

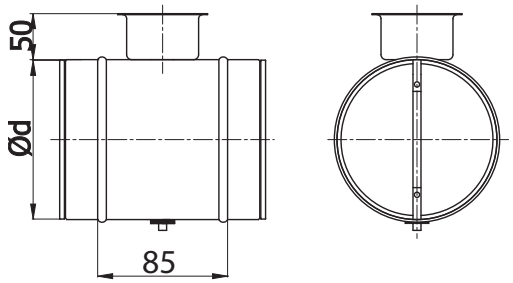

For d ≥ 355, the damper closure pivot is mounted on a single long bar.

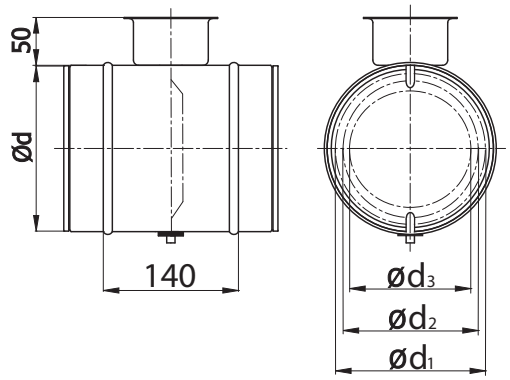

Ød nom (mm)	Ød1 nom (mm)	Ød2 nom (mm)	Ød3 nom (mm)	Weight (kg)
80*	–	–	–	0.40
100*	–	–	–	0.45
125*	–	–	–	0.55
140*	–		–	0.60
150*	–	–	–	0.65
160*	–	–	–	0.70
180*	–	–	–	0.75
200*	–	–	–	0.80
224*	–	–	–	0.90
250*	–	–	–	1.20
280*	–	–	–	1.40
300*	–	–	–	1.50
315*	–	–	–	1.60
355**	330	295	263	2.70
400**	330	295	263	3.30
450**	370	337	293	4.50
500**	370	337	293	5.00
560**	490	457	413	6.30
600**	490	457	413	6.70
630**	490	457	413	7.20

*with a press-formed damper closure
** with a damper closure & pivot bracing
If the damper diameter is to be greater than 630 mm, order the DASQ multi-blade damper.

ALNOR® ventilation systems
is a registered trademark protected by a technical patent. All modification rights reserved.

SPIRAL duct shutoff damper

DAS-CV



Description

The DAS-CV dampers are designed for cladding with up to 50 mm thick insulation.
The DAS-CV shutoff damper is a good choice when the ductwork closure does not have to be fully airtight. The damper closure position can be read on the 0° to 90° dial of the control handle. The damper closure opening ratio can be fixed with a screw.
The DAS-CV shutoff damper can be easily adapted for mounting Belimo power actuators. The power actuator must be compatible with the 8x8 mm square bar.
The product has safe edges.

Available materials - Product code examples

DAS-CV-...	- galvanized steel sheet
DAS-CV-K-...	- 1.4301/304 stainless steel sheet
DAS-CV-K-...-316L	- 1.4404/316L stainless steel sheet
DAS-CV-A-...	- aluminum sheet*
DAS-CV-CU-...	- copper sheet

*KIT-DS-CV-K damper mechanism

Product code example

Product code: **DAS-CV - aaa**

type
Ød

Dimensions

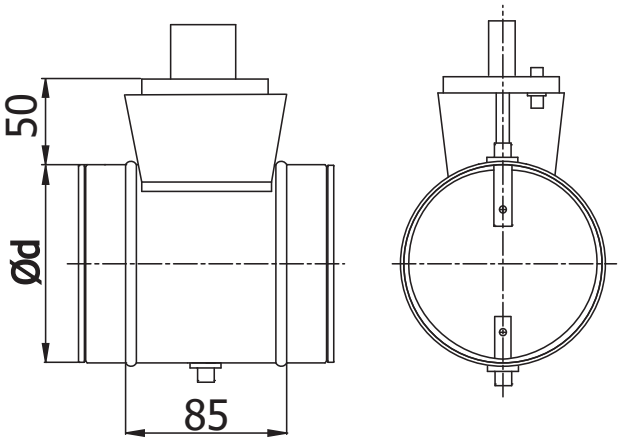

Ød [mm]	Weight [kg]
80	0.40
100	0.46
125	0.55
140	0.60
150	0.65
160	0.70
180	0.75
200	0.80
224	0.90
250	1.10
280	1.30
300	1.45
315	1.50
355	2.00
400	2.60

ALNOR® ventilation systems
is a registered trademark protected by a technical patent. All modification rights reserved.

Round ventilation damper w/o gaskets

DAS-PVC



Description

The DAS-PVC dampers are designed for cladding with up to 30 mm thick insulation.
The DAS-PVC shutoff damper is a good choice when the ductwork closure does not have to be fully airtight. The damper closure position can be read on the 0° to 90° dial of the control handle. The damper closure opening ratio can be fixed with a screw. The product has safe edges.

Available materials — Product code examples

DAS-PVC-... — galvanized steel sheet

DAS-PVC-K-... — 1.4301/304 stainless steel sheet

DAS-PVC-K-...-316L — 1.4404/316L stainless steel sheet

DAS-PVC-A-... — aluminium sheet

DAS-PVC-CU-... — copper sheet

Product code example

Product code: **DAS-PVC - aaa**

type

Ød

Dimensions

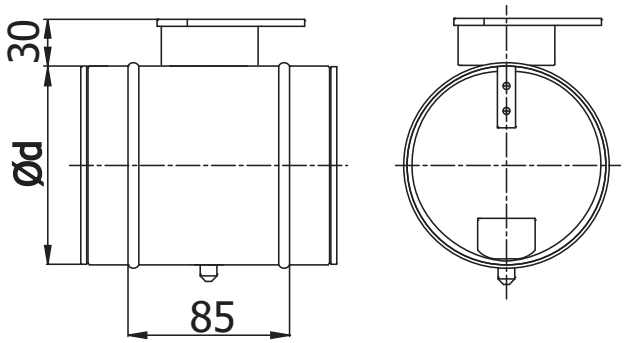

Ød [mm]	Weight [kg]
80	0.40
100	0.46
125	0.55
140	0.60
150	0.65
160	0.70
180	0.75
200	0.80
224	0.90
250	1.10
280	1.30
300	1.45
315	1.50

ALNOR® ventilation systems
is a registered trademark protected by a technical patent. All modification rights reserved.

Hand-operated damper

DASH



Description

The DASH dampers are among the most budget-efficient solutions for air flow control in round ductwork systems. The safe edges at the damper ends protect against accidental injury during the installation process. The wing nut can be tightened to set the control lever in place at a specific opening angle. The dial of the control handle shows the damper closure / opening ratio. This damper is designed for air ducts in diameters of 80 to 315 mm and made from galvanized steel sheet.

Available materials - Product code examples
DASH-... - galvanized steel sheet
DASH-K-... - 1.4301/304 stainless steel sheet

Product code example
Product code: **DASH - aaa**

type
Ød$_1$

Dimensions

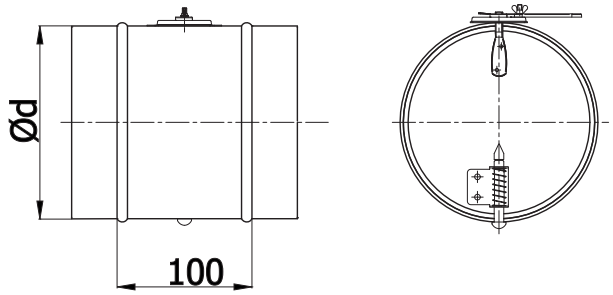

Ød$_{1\ nom}$ (mm)	Weight (kg)
80	0.4
100	0.4
125	0.5
140	0.6
150	0.6
160	0.7
180	0.7
200	0.8
224	0.9
250	1.2
280	1.4
300	1.5
315	1.6

ALNOR® ventilation systems
is a registered trademark protected by a technical patent. All modification rights reserved.

Airtight shutoff dampers

DATL/DAT



Description

The DATL/DAT dampers are designed for cladding with up to 50 mm thick insulation.
The DATL/DAT dampers are a good choice when the ductwork closure must be airtight. The damper closure position can be read on the 0° to 90° dial of the control handle. The damper closure opening ratio can be fixed with a screw.

DAT — airtight shutoff damper
DATL — airtight shutoff damper with gaskets at flanged ends
All DATL/DAT dampers of diameter 355 mm or greater have the damper closure pivot provided with extra bracing.
All DATL/DAT dampers of diameter 450 mm or greater are supplied with the KIT-DS-H damper mechanism control lever.
Standard dampers are made from galvanized steel sheet.

Available materials — Product code examples
DATL-... — galvanized steel sheet
DATL/DAT-... — 1.4301/304 stainless steel sheet

Product code example
Product code: **DATL - aaa**

type
Ød$_1$

Dimensions

For d_1 < 355, the damper closure pivot is mounted on two short rods.

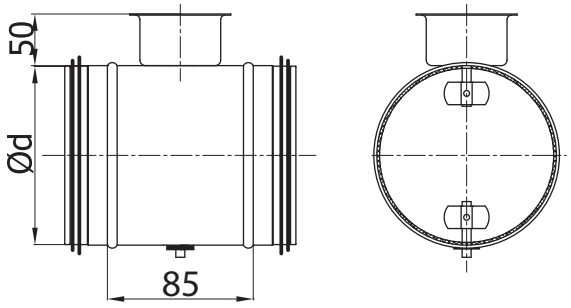

For d_1 ≥ 355, the damper closure pivot is mounted on a single long bar.

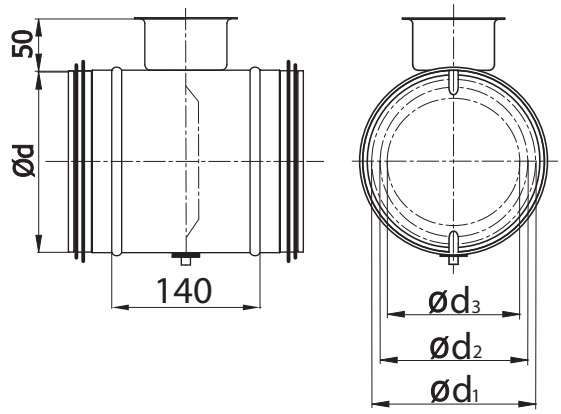

Ød $_{nom}$ (mm)	Ød$_{1\ nom}$ (mm)	Ød$_{2\ nom}$ (mm)	Ød$_{3\ nom}$ (mm)	Weight (kg)
80	–	–	–	0.40
100	–	–	–	0.45
125	–	–	–	0.55
140	–		–	0.60
150	–	–	–	0.65
160	–	–	–	0.70
180	–	–	–	0.75
200	–	–	–	0.80
224	–	–	–	0.90
250	–	–	–	1.20
280	–	–	–	1.40
300	–	–	–	1.50
315	–	–	–	1.60
355*	330	295	295	2.70
400*	330	295	295	3.30
450*	370	337	293	4.50
500*	370	337	293	5.00
560*	490	457	413	6.30
600*	490	457	413	6.70
630*	490	457	413	7.20

* with a damper closure & pivot bracing

ALNOR® ventilation systems
is a registered trademark protected by a technical patent. All modification rights reserved.

Airtight shutoff dampers

DATL/DAT

Air tightness testing

Based on the tests and the calculation results shown in Chart 1, the DATL-315 damper was found to meet air tightness class 4. The EN 1751 test method was applied.

Chart 1. Air flow leaks through a closed DATL-315 damper.

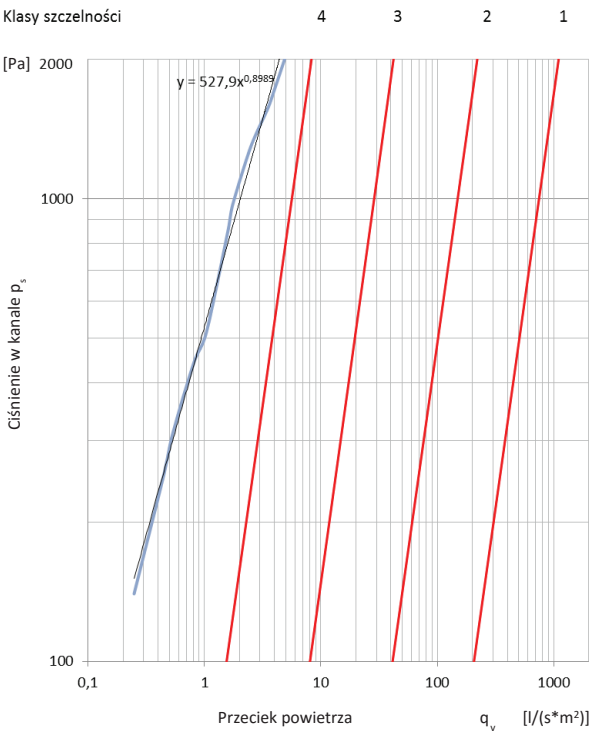

The damper closure deformation test was done at 2,000 Pa. The test duration was 120 seconds. The DATL-315 damper closure deflection was 2 cm. After the test, when the damper was opened and closed again, the damper closure returned to the original, non-deflected shape.

Vacuum deformation:

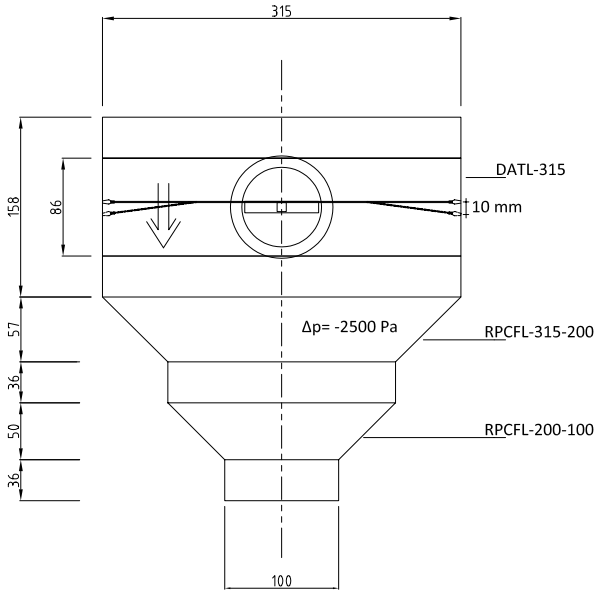

Overpressure deformation:

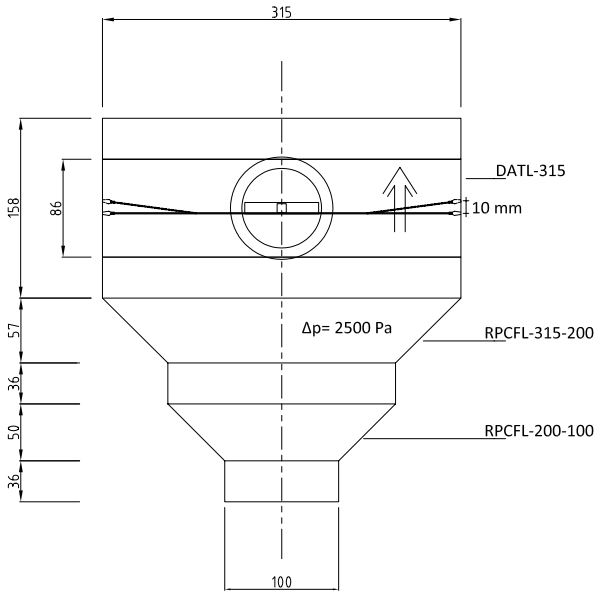

ALNOR® ventilation systems
is a registered trademark protected by a technical patent. All modification rights reserved.

Round smooth-flow perforated damper

DAPL-CV



Description

The DAPL-CV dampers are designed for cladding with up to 50 mm thick insulation.
The DAPL-CV shutoff damper is a good choice when the ductwork closure does not have to be fully airtight.
The perforated closure provides an even air flow without turbulence.
The damper closure position can be read on the 0° to 90° dial of the control handle. The damper closure opening ratio can be fixed with a screw.
The DAPL-CV shutoff damper can be easily adapted for mounting Belimo power actuators. The power actuator must be compatible with the 8x8 mm square bar.
The product has safe edges.
Closing the damper closure allows 35% of the rated air flow to pass.

Available materials - Product code examples

DAPL-CV-... - galvanized steel sheet
DAPL-CV-K-... - 1.4301/304 stainless steel sheet
DAPL-CV-K-...-316L - 1.4404/316L stainless steel sheet
DAPL-CV-A-... - aluminium sheet*
DAPL-PVC-CU-... - copper sheet

*KIT-DS-CV-K damper mechanism

Product code example

Product code: **DAPL-CV - aaa**

type
Ød

Dimensions

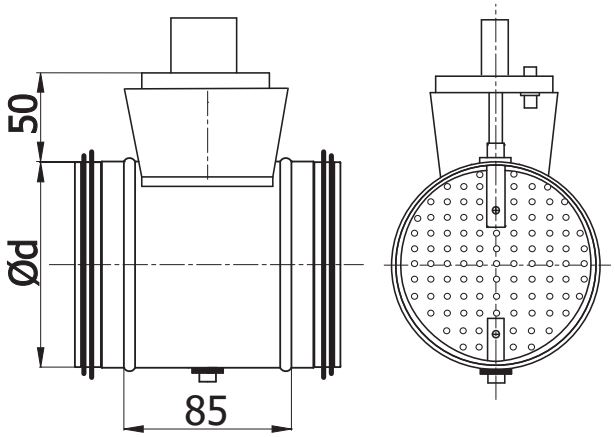

Ød [mm]	Weight [kg]
80	0.40
100	0.46
125	0.55
140	0.60
150	0.65
160	0.70
180	0.75
200	0.80
224	0.90
250	1.10
280	1.30
300	1.45
315	1.50
355	2.00
400	2.60

ALNOR® ventilation systems
is a registered trademark protected by a technical patent. All modification rights reserved.

Regulating damper with perforated closure

DAP-CV



Description

The DAP-CV damper with EPDM gaskets at both flange connections is designed for cladding with up to 50 mm thick insulation. The DAP-CV shutoff damper is a good choice when the ductwork closure does not have to be fully airtight. The perforated closure provides an even air flow without turbulence.
The damper closure position can be read on the 0° to 90° dial of the control handle. The damper closure opening ratio can be fixed with a screw. The DAP-CV shutoff damper can be easily adapted for mounting Belimo power actuators. The power actuator must be compatible with the 8x8 mm square bar. The product has safe edges.
Closing the damper closure allows 35% of the rated air flow to pass.

Available materials - Product code examples

DAP-CV-...	- galvanized steel sheet
DAP-CV-K-...	- 1.4301/304 stainless steel sheet
DAP-CV-K-...-316L	- 1.4404/316L stainless steel sheet
DAP-CV-A-...	- aluminium sheet*
DAP-PVC-CU-...	- copper sheet

*KIT-DS.-CV-K damper mechanism

Product code example

Product code: **DAP-CV - aaa**

type
Ød

Dimensions

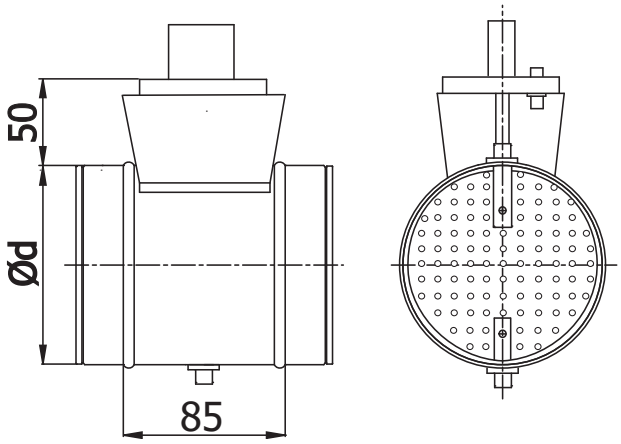

Ød [mm]	Weight [kg]
80	0.40
100	0.45
125	0.55
140	0.60
150	0.65
160	0.70
180	0.75
200	0.80
224	0.90
250	1.20
280	1.40
300	1.50
315	1.60
355	2.00
400	2.60

ALNOR® ventilation systems
is a registered trademark protected by a technical patent. All modification rights reserved.

Round non-return damper - inside duct

DAOSL-IN



Description

The DAOSL-IN dampers feature a split flap closure and are designed as non-return dampers which allows a single air flow direction only.
Both closure flaps are made of light-weight aluminium sheet and hinged on a steel bar with springs which keep the flaps closed when there is no air flow. This damper is often installed upstream of an air intake or an air exhaust unit to prevent the air backflow. The DAOSL-IN dampers are designed for **inline** duct installation.This saves time and space, and requires fewer installation accessories.

Available materials — Product code examples
DAOSL-IN-... — galvanized steel sheet

DAOSL-K-IN-... — 1.4301/304 stainless steel sheet

DAOSL-A-IN-... — aluminium sheet

Product code example
Product code: **DAOSL-IN - aaa**

type
Ød$_1$

Dimensions

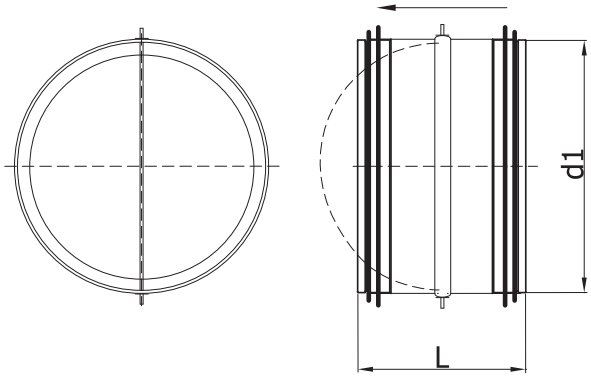

Ød$_{1\ nom}$ (mm)	L (mm)	Weight (kg)
80	130	0.15
100	130	0.2
125	130	0.25
150	130	0.3
160	130	0.32
200	130	0.4
250	190	0.7

Installation method

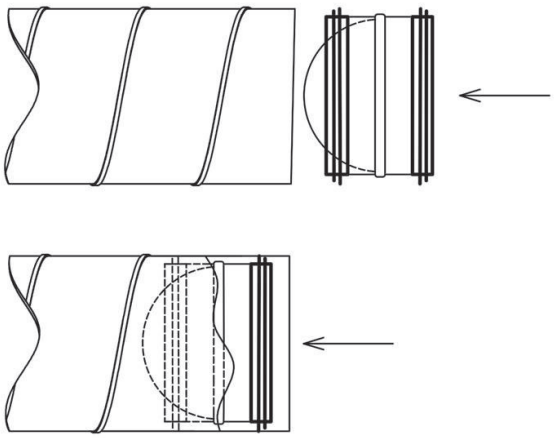

Caution!
When pressing the male ends into the ducts, hold the damper around its housing.

ALNOR® ventilation systems
is a registered trademark protected by a technical patent. All modification rights reserved.

Round non-return damper - airtightness class D

DAOSL



Description

The DAOSL dampers are designed for ventilation ductwork systems which require air tightness class D according to EN 12237 requirements. These dampers feature a split flap closure and are designed as non-return dampers which allows a single air flow direction only. The damper closure has approximately air tightness class 2 as per EN 1751:2002, without full class compliance. Both closure flaps are made of light-weight aluminium sheet and hinged on a steel bar with springs which keep the flaps closed when there is no air flow. This damper is often installed upstream of an air intake or an air exhaust unit to prevent the air backflow.

Available materials - Product code examples
DAOSL-... - galvanized steel sheet
DAOSL-K-... - 1.4301/304 stainless steel sheet
DAOSL-A-... - aluminium sheet

Product code example
Product code: **DAOSL - aaa**

type
Ød$_1$

Dimensions

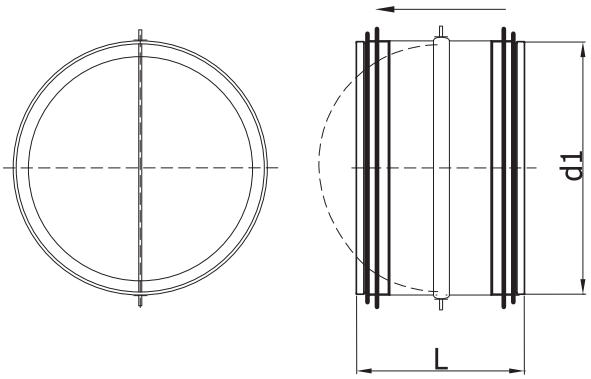

Ød$_{1\ nom}$ (mm)	L (mm)	Weight (kg)
80	130	0.2
100	130	0.2
125	130	0.3
150	130	0.4
160	130	0.4
180	130	0.4
200	130	0.5
250	190	0.8
300	190	0.9
315	190	1.0
355	270	1.5
400	270	1.7
450	270	1.9
500	270	2.1

Diameter sizes up to Ød 560 mm are available on request.

ALNOR® ventilation systems
is a registered trademark protected by a technical patent. All modification rights reserved.

DAOSL

Technical specifications

Pressure loss chart for DAOSL

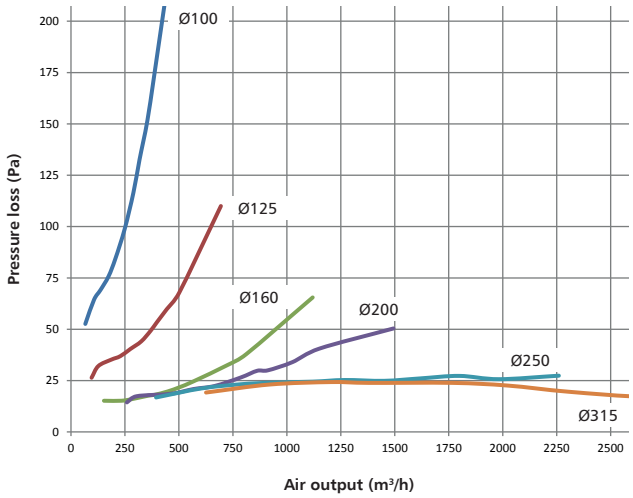

Pressure loss chart for DAOSL-K

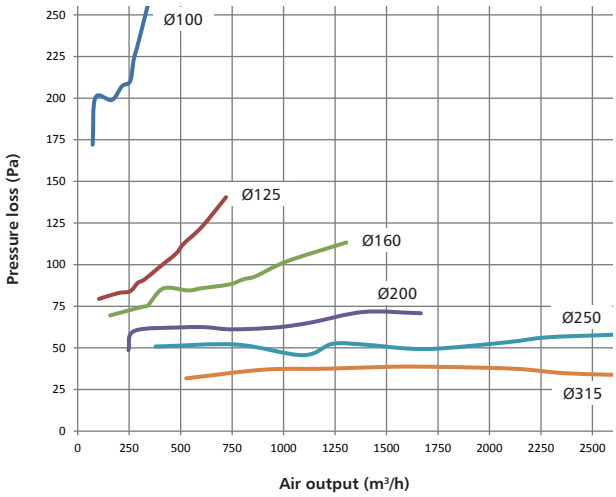

Air tightness chart for DAOSL

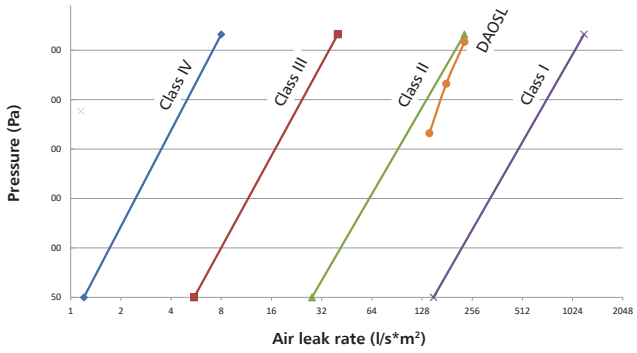

ALNOR® ventilation systems
is a registered trademark protected by a technical patent. All modification rights reserved.

Round non-return damper

DAOS

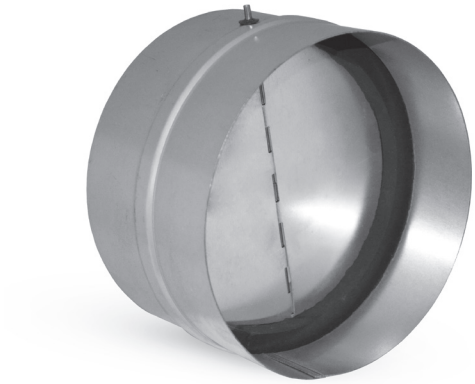

Description

The DAOS dampers feature a split flap closure and allow the air flow to pass in one direction only. The aluminium closure flaps are pressed against a foam seal when closed to reduce the operating noise in the ductwork. The split flap closure is held closed with a spring gear, which makes it also possible to use the damper in vertical installations. A version intended for a full-male insertion into the ductwork ends is available on special request.

Available materials - Product code examples
DAOS-... - galvanized steel sheet
DAOS-K-... - 1.4301/304 stainless steel sheet
DAOS-A-... - aluminium sheet

Product code example
Product code: **DAOS - aaa**

type
Ød$_1$

Dimensions

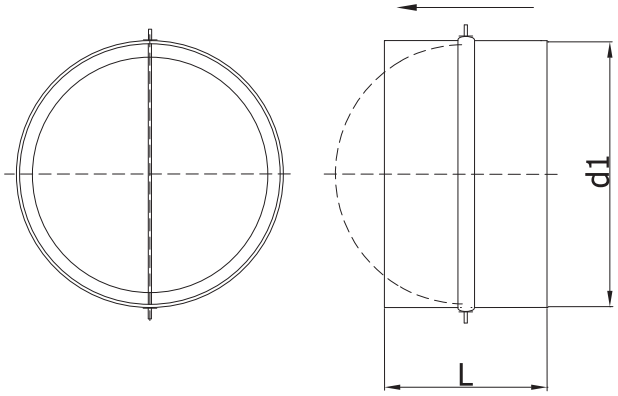

Ød$_{1\ nom}$ (mm)	L (mm)	Weight (kg)
80	81	0.1
100	81	0.1
125	81	0.2
150	81	0.2
160	81	0.2
180	81	0.3
200	81	0.3
250	190	0.8
300	190	0.9
315	190	1.0
355	270	1.5
400	270	1.7
450	270	1.9
500	270	2.1

Diameter sizes up to Ød 560 mm are available on request.

ALNOR® ventilation systems
is a registered trademark protected by a technical patent. All modification rights reserved.

Technical specifications

Pressure loss chart for DAOS

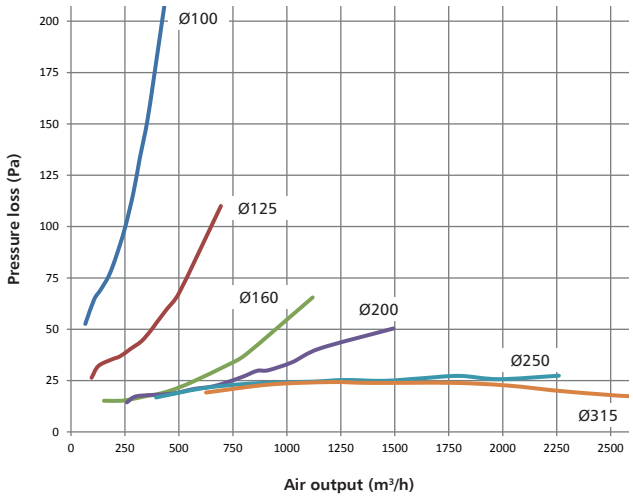

Pressure loss chart for DAOS-K

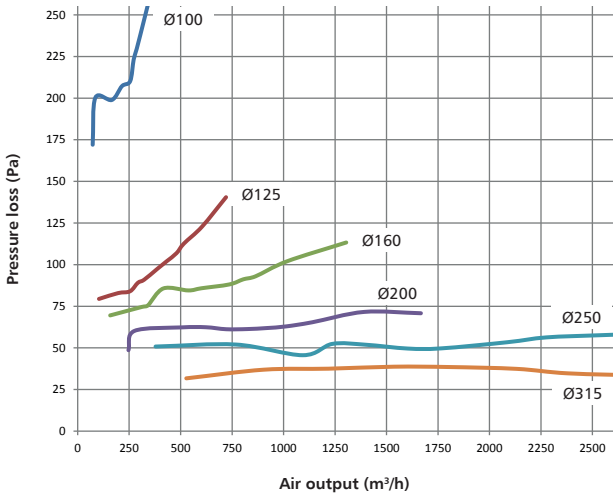

ALNOR® ventilation systems
is a registered trademark protected by a technical patent. All modification rights reserved.

Reinforced backdraft damper

DAOSL-B / DAOS-B



Description

The DAOSL-B / DAOS-B ventilation damper is a new version of DAOS (L) backdraft dampers. In addition, it is reinforced with a reinforcing rods, making it possible to manufacture large diameters up to Ø630mm, while maintaining the rigidity of the construction and correct operation of the blades. The DAOSL-B damper with seals is used in installations that meet airtightness class D according to DIN EN 12237. The DAOS-B-FLS version with flanges is suitable for mounting on axial fans.

Available materials — Product code examples

DAOS-B-... - galvanized steel sheet
DAOSL-B-… - galvanized steel sheet, with seals

DAOS-B-K-... - 1.4301/304 stainless steel sheet
DAOSL-B-K-... - 1.4301/304 stainless steel sheet, with seals

DAOS-B-A-... - aluminium sheet (stainless steel rod)
DAOSL-B-A-... - aluminium sheet (stainless steel rod), with seals
DAOSLI-B-… - galvanized steel sheet, insulated, with seals
DAOS-B-FLS-… - galvanized steel sheet, with flanges

Product code example

Product code: **DAOSL-B - aaa**

type
Ød

Dimensions

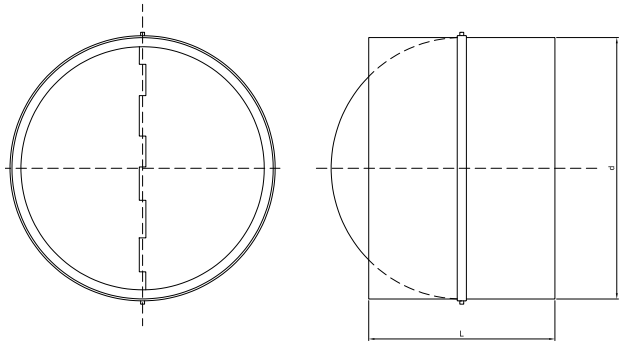

Ød (mm)	L (mm)
355	285
400	285
450	285
500	285
560	285
630	285

ALNOR® ventilation systems
is a registered trademark protected by a technical patent. All modification rights reserved.

Duct gate damper for air ventilation and dust extraction systems

GKL/GK



Description

The hand-operated duct gate damper is designed for air ventilation and dust extraction systems which carry particulates of sawdust, EPS debris, or other light air fractions of solids. An advantage is the sliding gate which opens the passage to full clearance, without any obstruction by closure edges or pivot rods. The gate damper is a rigid structure made of 1-mm thick galvanized steel sheet, to which ILS flanges (GK gate damper) or ILSL flanges with gaskets (GKL gate damper) are attached. Gate dampers can be requested with FLS steel flanges or upturns for use with quick clamps.

GK — plain end flange gate damper
GSL — gate damper with EPDM gaskets at the flanges, air tightness class D according to EN 12237

Available materials — Product code examples

GKL-... — galvanized steel sheet

GKL-K-... — 1.4301/304 stainless steel sheet

GKL-K-...-316L — 1.4404/316L stainless steel sheet

GKL-A-... — aluminium sheet

Product code example

Product code: **GKL - aaa**

type

$Ød_1$

Dimensions

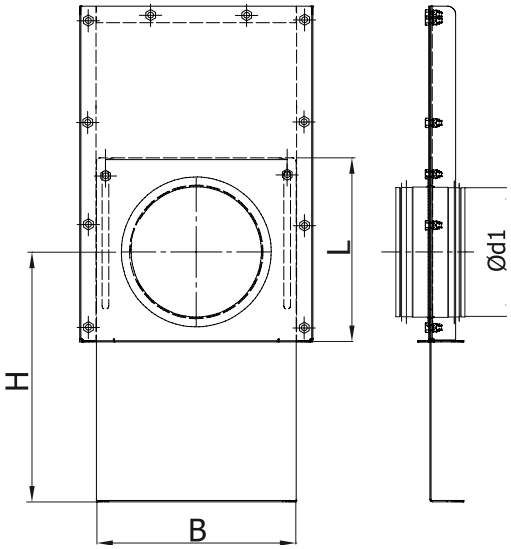

$Ød_1$ (mm)	A (mm)	B (mm)	C (mm)	D (mm)	Weight (kg)
100	184	210	320	455	3.15
125	209	290	400	555	4.35
150	244	300	405	590	5.05
160	244	300	405	600	5.15
200	315	370	515	750	7.05
400	484	675	915	1355	18.20

ALNOR® ventilation systems
is a registered trademark protected by a technical patent. All modification rights reserved.

Round gate damper with pneumatic actuator

GKML/GKM



Description

The GKML/GKM round gate dampers with pneumatic actuators are designed for air ventilation and dust extraction systems. The design of the gate damper makes it easier to clean the ductwork as there are no elements within the clear opening. The gate damper provides a tight seal when closed and enables remote control of the opening ratio which can be set in infinitely variable steps.
The solenoid valve of the pneumatic actuator is available for 230 V AC, 24 V AC or 24 V DC power supply - to be specified when ordering.

Recommended installation options:
- GKML/GKM sized ≤ 200 mm in diameter: use 1 actuator
- GKML/GKM sized > 200 mm in diameter: use 2 actuators

GKM — gate damper with actuator and bare flanges
GKML — gate damper with actuator and EPDM gaskets at the flanges, air tightness class D acc. to EN12237

Technical parameters

Air cylinder:

control pressure:	0,6 MPa (6 bar)
max. ambient temp:	-20°C to 80°C
operating medium:	treated air

Solenoid valve:

control pressure:	max 7bar
ambient temperature:	max 50˚C
supply voltage:	230V
Ingress protection:	IP65

Available materials — Product code examples

GKML-...	- galvanized steel sheet
GKML-K-...	- 1.4301/304 stainless steel sheet
GKML-K-...-316L	- 1.4404/316L stainless steel sheet
GKML-A-...	- aluminium sheet

Product code example

Product code: **GKML - aaa**

type
Ød$_1$

Dimensions

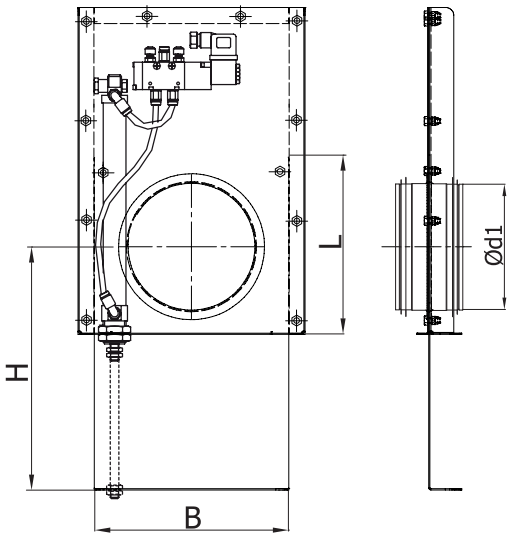

Ød$_1$ (mm)	A (mm)	B (mm)	C (mm)	D (mm)	Weight (kg)
100	184	210	320	455	3.15
125	209	290	400	555	4.35
150	244	300	405	590	5.05
160	244	300	405	600	5.15
200	315	370	515	750	7.05
400	484	675	915	1355	18.20

ALNOR® ventilation systems
is a registered trademark protected by a technical patent. All modification rights reserved.

T-piece damper for GCHX (ground-coupled heat exchangers)

DATVTL



Description

The DATVTL T-piece damper is an air distribution units which can replace two separate ventilation dampers. The easy adjustment control can divert the air flow to either of the two 90°-spaced legs, with the other leg automatically closed. The damper can also be used for supplying air via either of the two legs from an external air supply valve, a ground-coupled heat exchanger, or a fireplace hot air hood. All damper sizes come with the KIT-DS-H damper mechanism control handle for easier operation. The ends of the damper are provided with EPDM gaskets to ensure air tightness class D.

Available materials — Product code examples
DATVTL-... — galvanized steel sheet

Product code example
Product code: **DATVTL - aaa**

type
Ød$_1$

Dimensions

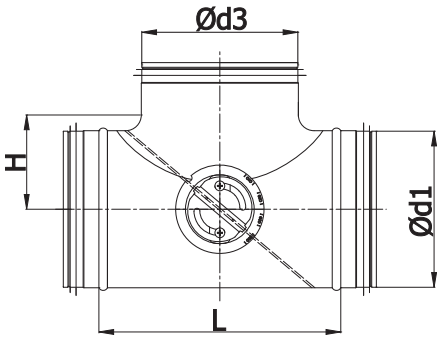

Ød$_{1\ nom}$ (mm)	Ød$_{3\ nom}$ (mm)	L (mm)	H (mm)	Weight (kg)
100	100	151	65	0.8
125	125	184	83	1.1
160	160	229	105	1.7
200	200	281	125	2.2
250	250	307	150	3.4
315	315	390	182	4.9

Air flow directions

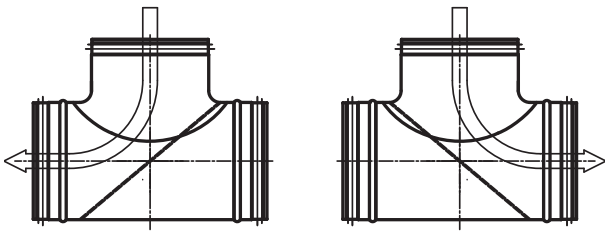

ALNOR® ventilation systems
is a registered trademark protected by a technical patent. All modification rights reserved.

T-piece damper for GCHX (ground-coupled heat exchangers)

DATVTL

Technical specifications

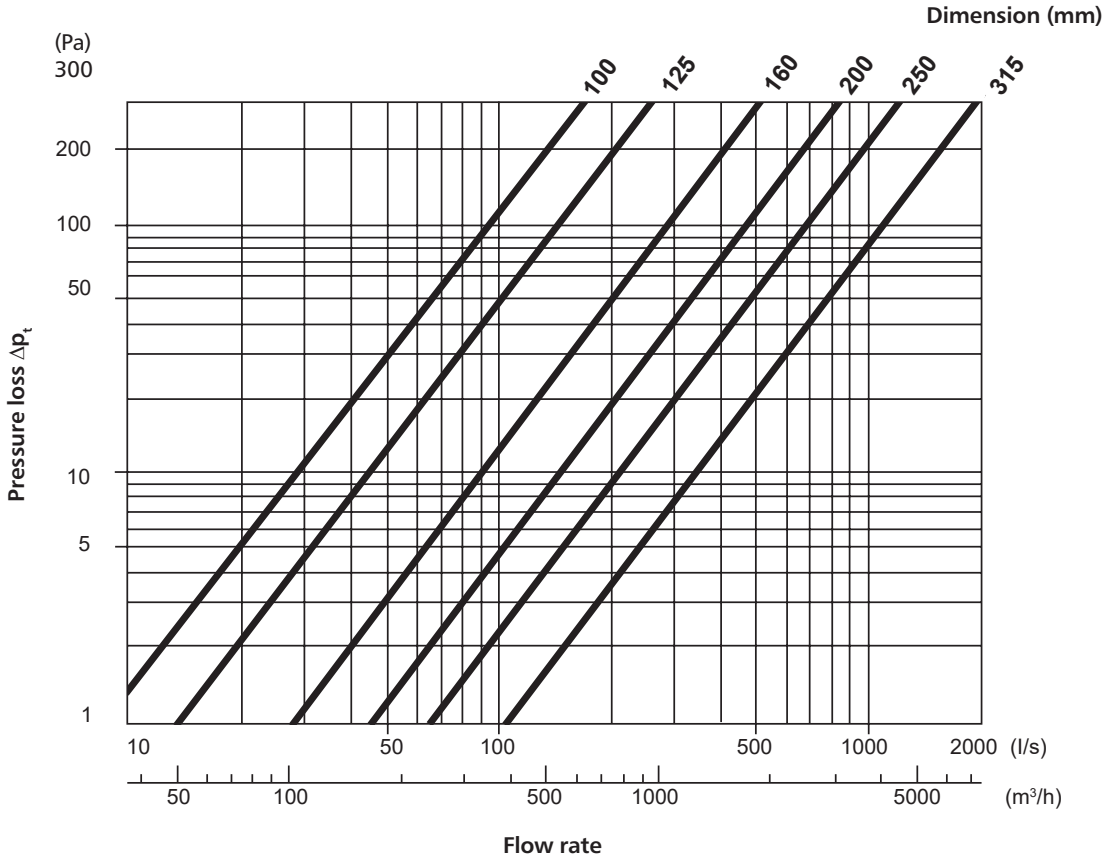



ALNOR® ventilation systems
is a registered trademark protected by a technical patent. All modification rights reserved.

T-piece double damper for SPIRAL ducts

DATASL



Description

The DATASL T-piece double regulating dampers for round ductwork systems can replace two standard DASL dampers. The alternate-opening link which couples both closures of the damper helps close one closure and at the same time open the other closure using a single damper mechanism. This design can save approximately 20 to 30% of installation space and helps avoid coupling two separate dampers with T-pieces and MSF couplings. The double EDPM gasket at each flange provides the best air tightness class D as per EN 12237:2005.

Available materials — Product code examples
DATASL-... — galvanized steel sheet

Product code example
Product code: **DATASL - aaa - bbb**

type
Ød$_1$
Ød$_3$

Dimensions

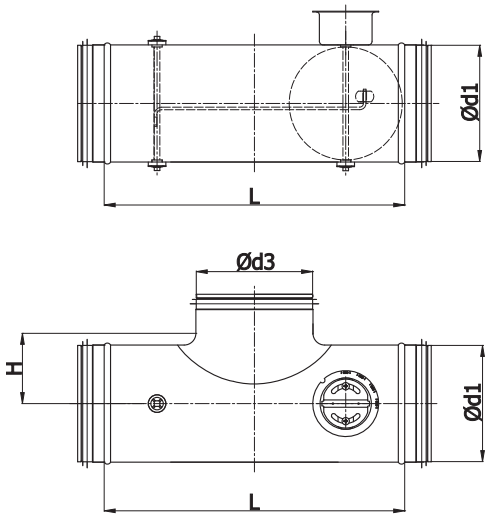

Ød$_{1\ nom}$ (mm)	Ød$_{3\ nom}$ (mm)	L (mm)	H (mm)	Weight (kg)
100	100	280	65	1.1
125	125	345	83	1.5
160	160	385	105	2.0
200	200	425	125	2.8
250	250	520	150	4.1
315	315	585	182	5.9
400	400	645	225	8.3

ALNOR® ventilation systems
is a registered trademark protected by a technical patent. All modification rights reserved.

Bypass dampers

DATASL

Technical specifications

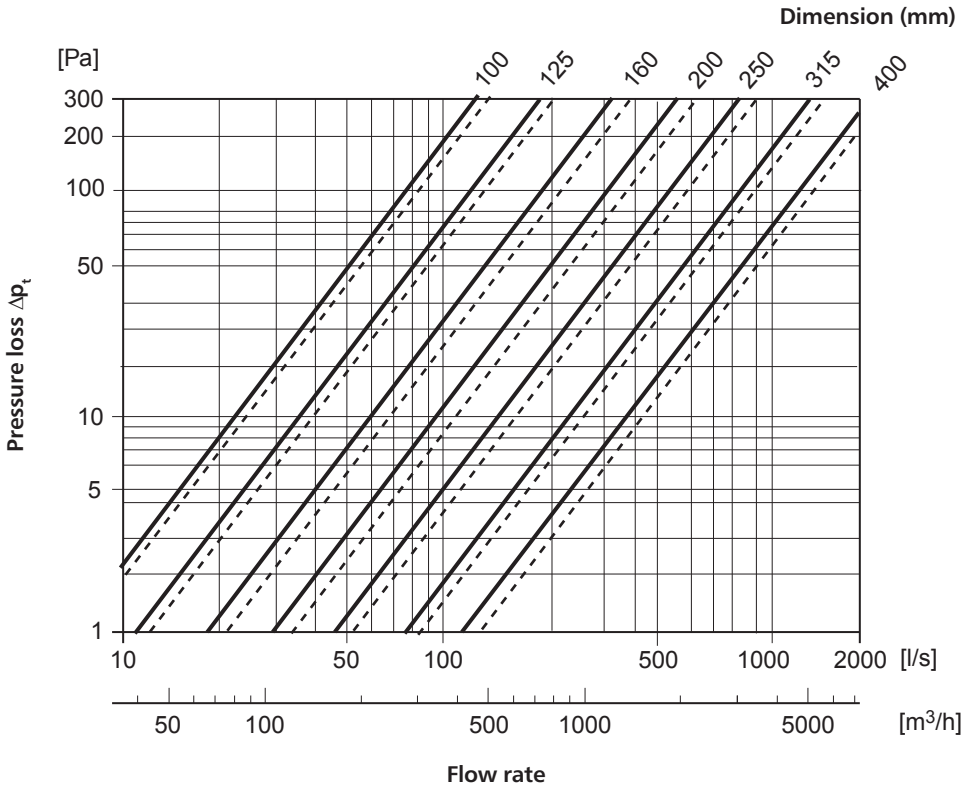

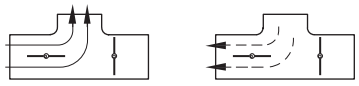

ALNOR® ventilation systems
is a registered trademark protected by a technical patent. All modification rights reserved.

Regulating dampers with actuator mounting

DASML / DASM



Description

Dampers with actuator mounting are available in diameters of Ø80 to Ø630 mm, including intermediate sizes. The actuator mounting is designed to enable cladding with up to 50 mm thick insulation.
The standard version permits a lengthwise actuator orientation

For fast assembly of actuators, we recommend specially designed DA-SUP-S and DA-SUP-M mounting plates.

Actuators matching DA-SUP-S mountig plate	*Actuators matching DA-SUP-M mountig plate*
Alnor DM-LM-06	Alnor DM-LM-06
Belimo CM	Alnor DM-LM-08
Belimo LM	Belimo CM
Belimo TR	Belimo NM

UWAGA! Podstawki DA-SUP występują tylko w wersji wzdłużnej!

The DASML/DASM dampers are a good choice when the ductwork closure does not have to be fully airtight.
The opening angle can be fixed with a mechanical limiter installed directly on the actuator.
For outdoor installations, the actuator must be protected from UV light and weather.
All dampers can be provided with various types of actuators on request.

DASM — shutoff damper with actuator mounting
DASML — airtight shutoff damper with gaskets at flanges and actuator mounting

Available materials — Product code examples
DASML-...-... — galvanized steel sheet
Product code example
Product code: **DASML - aaa - bbb**

type
Ød$_1$
orientation of the actuator mounting

Dimensions

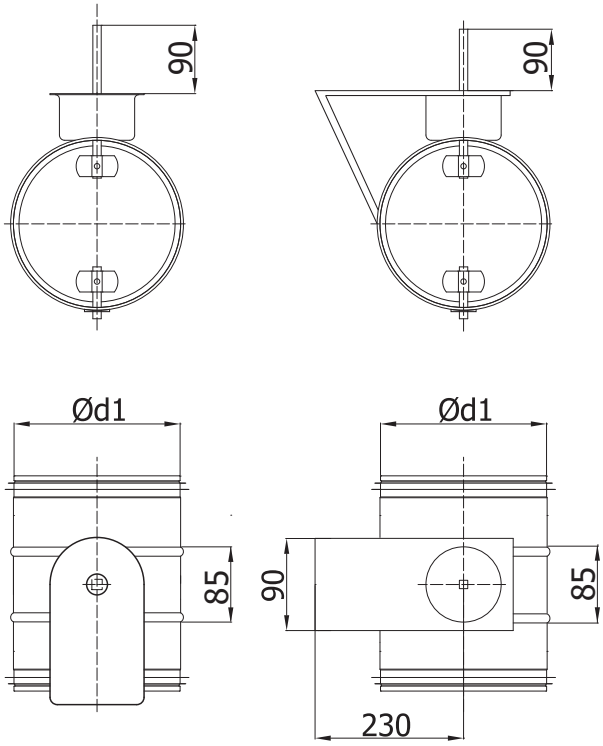

Standard: lengthwise actuator orientation

P — crosswise actuator orientation

DA-SUP-S mounting plate

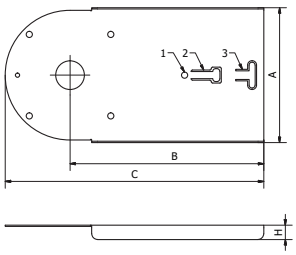

DA-SUP-M mounting plate

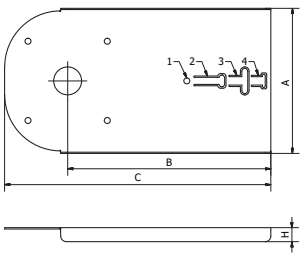

DA-SUP-S mounting plate			*DA-SUP-M mounting plate*		
A [mm]	*B [mm]*	*C [mm]*	*A [mm]*	*B [mm]*	*C [mm]*
94	135	182	104	145	190

DA-SUP-S/M mounting plate is mounted lengthwise only!

Ød$_{1\ nom}$ [mm]	*Weight [kg]*
80	0.6
100	0.7
125	0.8
160	0.9
200	1.1
250	1.4
315	1.7

Ød$_{1\ nom}$ [mm]	*Weight [kg]*
355	2.2
400	2.7
450	3.7
500	4.3
560	5.0
630	5.8

ALNOR® ventilation systems
is a registered trademark protected by a technical patent. All modification rights reserved.

Airtight shutoff dampers with actuator mounting

DATML/DATM



Description

Dampers with actuator mounting are available in diameters of Ø80 to Ø630 mm, including intermediate sizes. The actuator mounting is designed to enable cladding with up to 50 mm thick insulation.
The standard version permits a lengthwise actuator orientation

For fast assembly of actuators, we recommend specially designed DA-SUP-S and DA-SUP-M mounting plates.

Actuators matching DA-SUP-S mountig plate	*Actuators matching DA-SUP-M mountig plat*
Alnor DM-LM-06	Alnor DM-LM-06
Belimo CM	Alnor DM-LM-08
Belimo LM	Belimo CM
Belimo TR	Belimo NM

NOTE! DA-SUP mounting plates are available only in lengthwise version!
The standard version permits a lengthwise actuator orientation. The DATML/DATM dampers are a good choice when the ductwork closure must be airtight. The opening angle can be fixed with a mechanical limiter installed directly on the actuator. The damper closure can be deflected by up to 2 cm when the air pressure exceeds 2,000 Pa. For outdoor installations, the actuator must be protected from UV light and weather. All dampers can be provided with various types of actuators on request.

DATM — airtight shutoff damper with actuator mounting
DATML — airtight shutoff damper with gaskets at flanges and actuator mounting

Available materials — Product code examples
DATML-... — galvanized steel sheet

Product code example
Product code: **DATML - aaa - bbb**

type
$Ød_1$
orientation of the actuator mounting

Dimensions

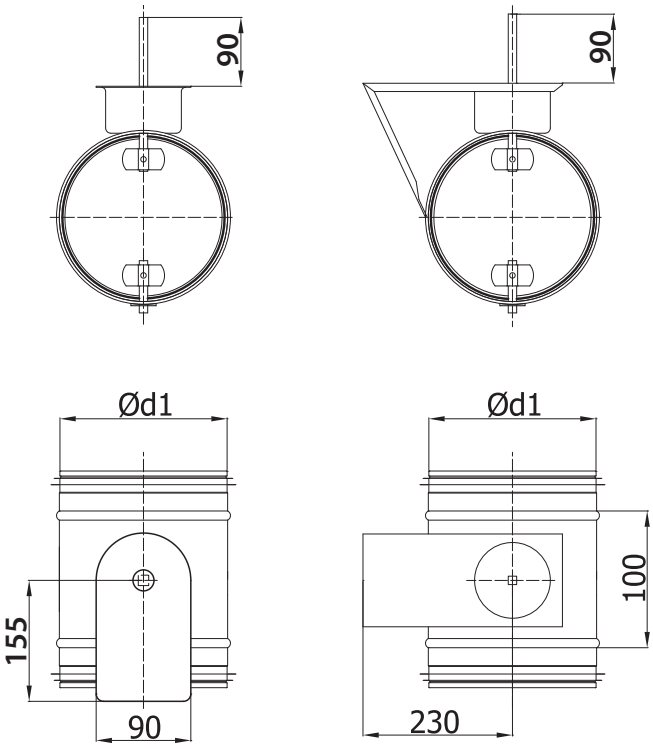

Standard: lengthwise actuator orientation

P — crosswise actuator orientation

DA-SUP-S mounting plate

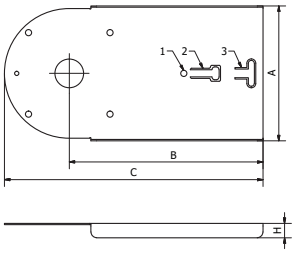

DA-SUP-M mounting plate

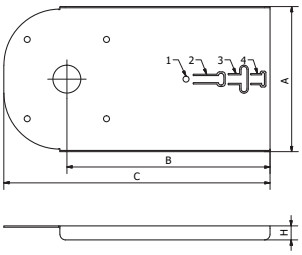

DA-SUP-S mounting plate			*DA-SUP-M mounting plate*		
A [mm]	*B [mm]*	*C [mm]*	*A [mm]*	*B [mm]*	*C [mm]*
94	135	182	104	145	190

DA-SUP-S/M mounting plate is mounted lengthwise only!

$Ød_{1\ nom}$ (mm)	*Weight (kg)*	*$Ød_{1\ nom}$ (mm)*	*Weight (kg)*
80	0.6	355	2.3
100	0.7	400	2.8
125	0.8	450	3.8
160	0.9	500	4.5
200	1.2	560	5.2
250	1.5	630	6.0
315	1.8		

ALNOR® ventilation systems
is a registered trademark protected by a technical patent. All modification rights reserved.

Bypass dampers with actuator mounting

DATVTML



Description

The bypass dampers can replace a set of two standard dampers with a T-piece and couplings, which makes the entire assembly 20 to 30% shorter.

The DATVTML damper has a motor operator.

For fast assembly of actuators, we recommend specially designed DA-SUP-S and DA-SUP-M mounting plates.

Actuators matching DA-SUP-S mountig plate	*Actuators matching DA-SUP-M mountig plate*
Alnor DM-LM-06	Alnor DM-LM-06
Belimo CM	Alnor DM-LM-08
Belimo LM	Belimo CM
Belimo TR	Belimo NM

NOTE!
DA-SUP mounting plates are available only in lengthwise version!

Available materials — Product code examples
DATVTML-...-... — galvanized steel sheet

Product code example
Product code: **DATVTML - aaa - bbb**

type
Ød$_1$
type of actuator

Dimensions

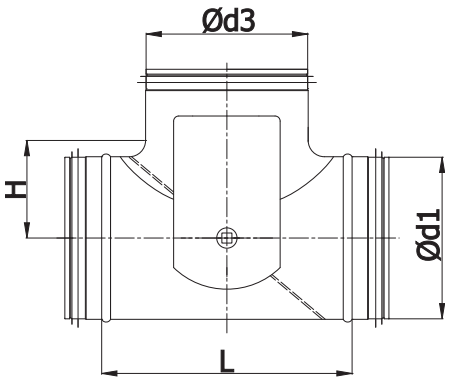

Ød$_{1\ nom}$ (mm)	*Ød$_{3\ nom}$ (mm)*	*L (mm)*	*H (mm)*	*Weight (kg)*
100	100	150	65	0.8
125	125	184	83	1.1
160	160	229	105	1.7
200	200	281	125	2.2
250	250	307	150	3.4
315	315	390	182	4.9

DA-SUP-S mounting plate

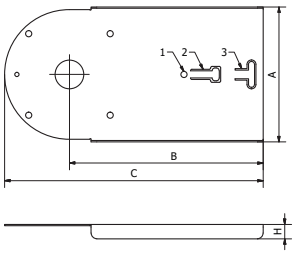

DA-SUP-M mounting plate

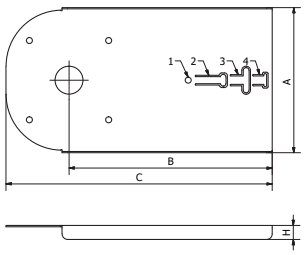

DA-SUP-S mouting plate			*DA-SUP-M mouting plate*		
A [mm]	*B [mm]*	*C [mm]*	*A [mm]*	*B [mm]*	*C [mm]*
94	135	182	104	145	190

DA-SUP-S/M mounting plate is mounted lengthwise only!

Air flow directions

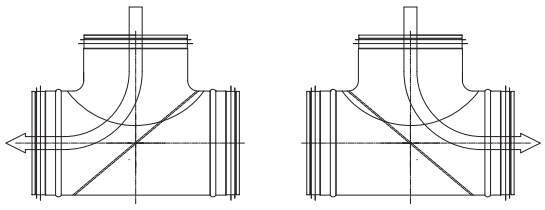

ALNOR® ventilation systems
is a registered trademark protected by a technical patent. All modification rights reserved.

Iris damper
GBL



Description

The GBL iris dampers are essential for smooth control of the duct air pressure. The lever and the iris regulating plates mechanism allow smooth adjustment of the diameter of the orifice(opening). The iris-type closure allows throttling of the air flow without turbulence or in-duct noise. The GBL iris damper can be installed both in air supply and air exhaust ducts.
Each Iris damper is provided with two manometer connections. The GBL can be opened to the full clear diameter for easier cleaning of the ductwork. The iris dampers, however, cannot be sealed shut (the maximum closing ratio is ca. 25% of the nominal clear diameter).

Available materials — Product code examples
GBL-... — galvanized steel sheet

Product code example
Product code: **GBL - aaa**

type
$Ød_1$

Dimensions

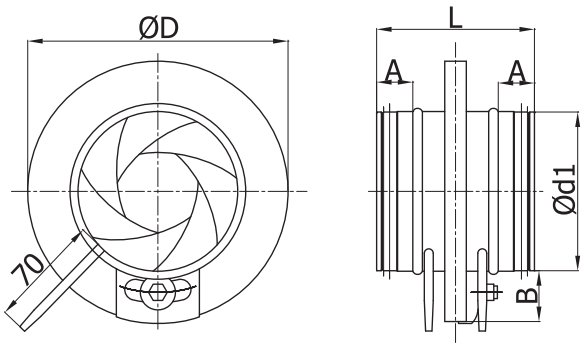

$Ød_{1\ nom}$ (mm)	ØD (mm)	L (mm)	A (mm)	B (mm)	Weight (kg)
80	125	120	35	22	0.5
100	165	110	30	32	0.5
125	188	110	30	32	0.7
150	230	110	30	40	1.3
160	230	110	30	35	0.9
200	285	110	30	42	1.4
250	335	135	40	42	2.1
315	410	135	40	47	3.5
400	525	150	50	62	6.4
500	655	150	50	77	9.6
630	815	150	50	92	15.6
800	1015	285	100	107	25.0

Technical specifications

K-value for various damper settings

	k							
Item	1	2	3	4	5	6	7	8
GBL 80	6.1	4.1	3.2	2.3	1.4	0.9	0.6	–
GBL 100	10.4	7.5	6.0	4.5	3.4	2.5	1.7	0.9
GBL 125	13.8	8.8	6.5	4.7	3.5	2.7	1.5	–
GBL 150	24.1	16.5	13.4	11.0	8.9	6.9	5.2	3.7
GBL 160	22.1	14.8	12.5	10.7	8.5	6.8	4.9	3.5
GBL 200	44.2	30.9	23.2	18.2	14.0	11.0	8.4	5.0
GBL 250	64.4	45.6	38.7	30.7	24.1	18.4	12.8	8.9
GBL 315	118.0	70.0	58.7	45.1	37.0	30.0	21.8	15.8
GBL 400	131.0	102.0	88.3	67.3	52.7	38.5	28.4	15.5
GBL 500	230.0	177.0	146.0	112.0	88.5	66.6	48.0	30.0
GBL 630	451.0	297.0	238.0	169.0	127.0	91.6	62.8	35.1
GBL 800	489.0	402.0	344.0	267.0	217.0	170.0	122.0	73.7

ALNOR® ventilation systems
is a registered trademark protected by a technical patent. All modification rights reserved.

Technical specifications

GBL 80

$q_v = k\sqrt{\Delta p_m}$ (l/s)

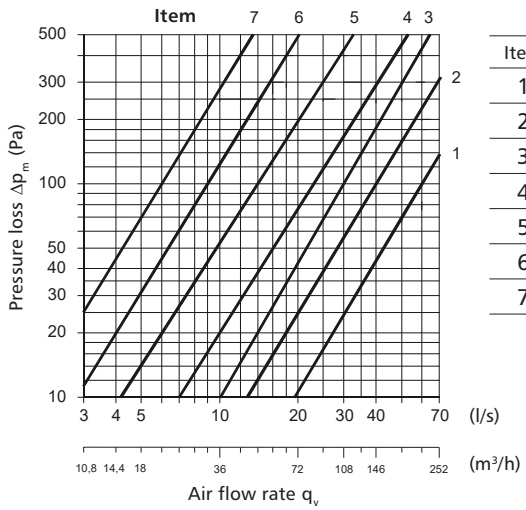

Item	k
1	6.1
2	4.1
3	3.2
4	2.3
5	1.4
6	0.9
7	0.6

GBL 100

$q_v = k\sqrt{\Delta p_m}$ (l/s)

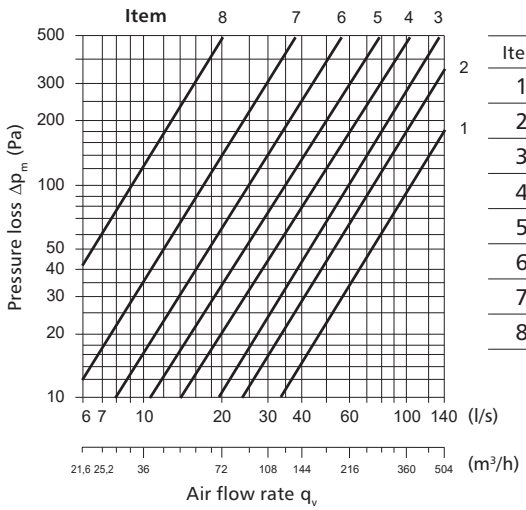

Item	k
1	10.4
2	7.5
3	6.0
4	4.5
5	3.4
6	2.5
7	1.7
8	0.9

GBL 125

$q_v = k\sqrt{\Delta p_m}$ (l/s)

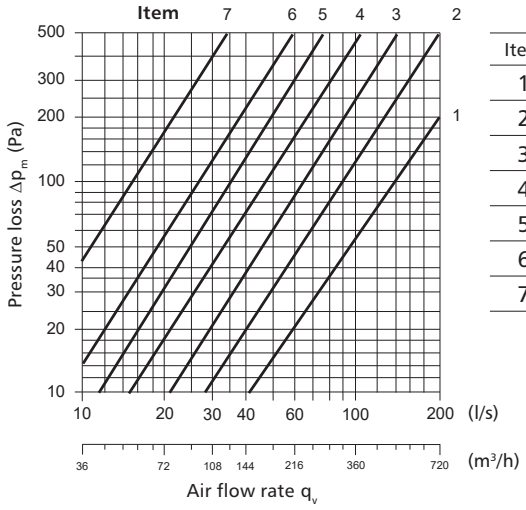

Item	k
1	13.8
2	8.8
3	6.5
4	4.7
5	3.5
6	2.7
7	1.5

GBL 150

$q_v = k\sqrt{\Delta p_m}$ (l/s)

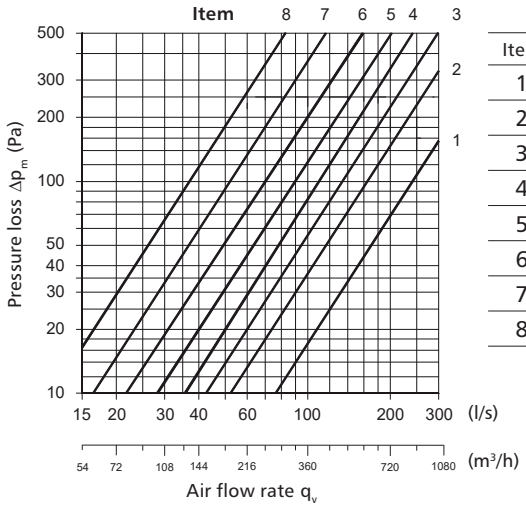

Item	k
1	24.1
2	16.5
3	13.4
4	11.0
5	8.9
6	6.9
7	5.2
8	3.7

GBL 160

$q_v = k\sqrt{\Delta p_m}$ (l/s)

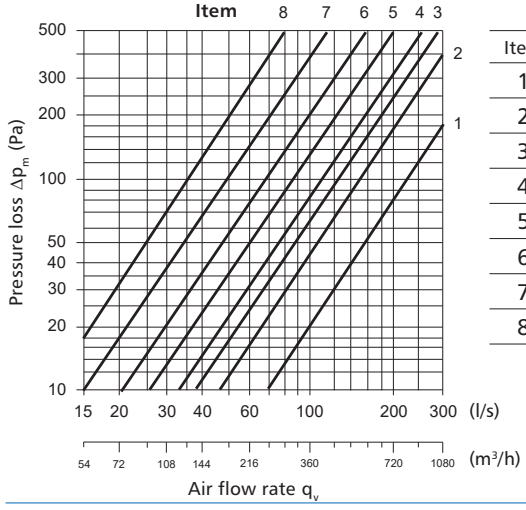

Item	k
1	22.1
2	14.8
3	12.5
4	10.7
5	8.5
6	6.8
7	4.9
8	3.5

GBL 200

$q_v = k\sqrt{\Delta p_m}$ (l/s)

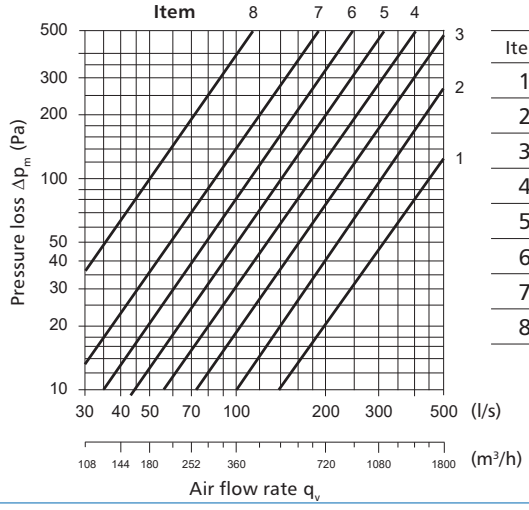

Item	k
1	44.2
2	30.9
3	23.2
4	18.2
5	14.0
6	11.0
7	8.4
8	5.0

ALNOR® ventilation systems
is a registered trademark protected by a technical patent. All modification rights reserved.

Iris damper

GBL

Technical specifications

GBL 250

$q_v = k\sqrt{\Delta p_m}$ (l/s)

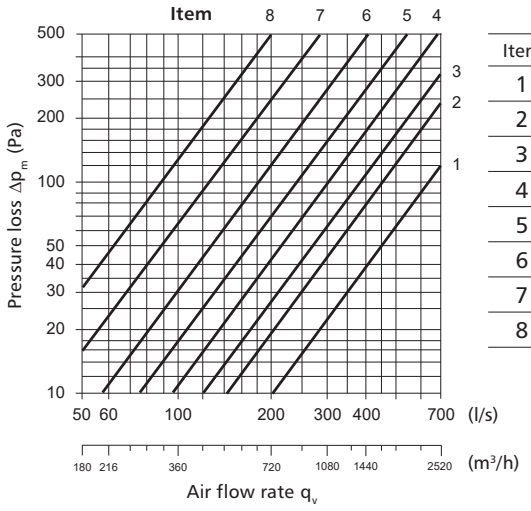

Item	k
1	64.4
2	45.6
3	38.7
4	30.7
5	24.1
6	18.4
7	12.8
8	8.9

GBL 315

$q_v = k\sqrt{\Delta p_m}$ (l/s)

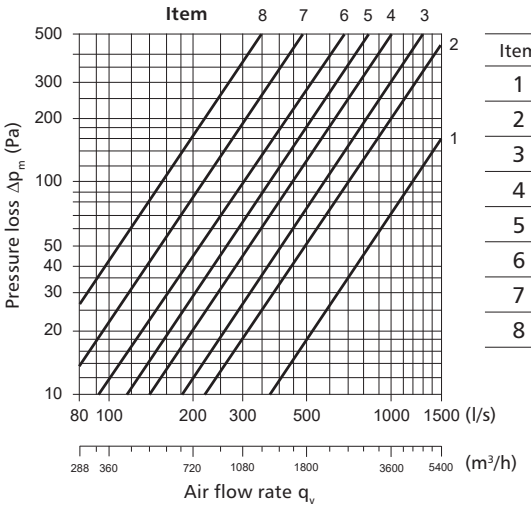

Item	k
1	118.0
2	70.0
3	58.7
4	45.1
5	37.0
6	30.0
7	21.8
8	15.8

GBL 400

$q_v = k\sqrt{\Delta p_m}$ (l/s)

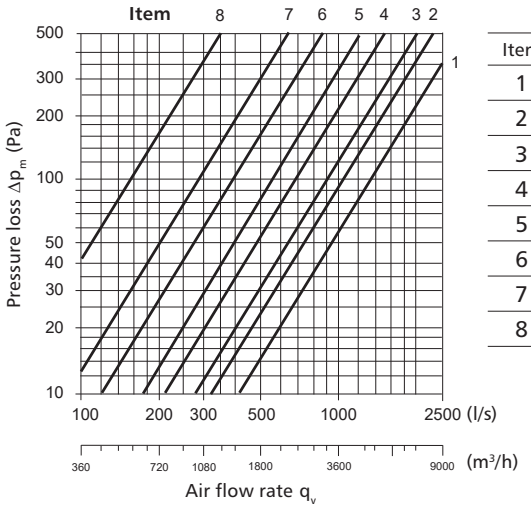

Item	k
1	131.0
2	102.0
3	88.3
4	67.3
5	52.7
6	38.5
7	28.4
8	15.5

GBL 500

$q_v = k\sqrt{\Delta p_m}$ (l/s)

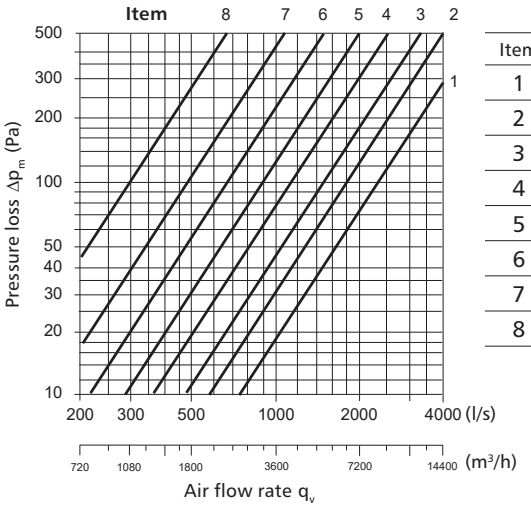

Item	k
1	230.0
2	177.0
3	146.0
4	112.0
5	88.5
6	66.6
7	48.0
8	30.0

GBL 630

$q_v = k\sqrt{\Delta p_m}$ (l/s)

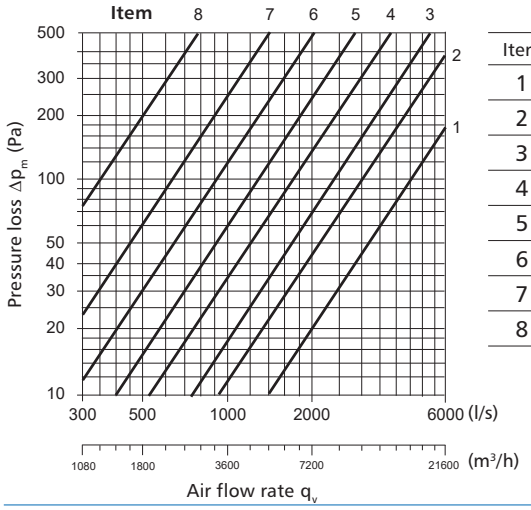

Item	k
1	451.0
2	297.0
3	238.0
4	169.0
5	127.0
6	91.6
7	62.8
8	35.1

GBL 800

$q_v = k\sqrt{\Delta p_m}$ (l/s)

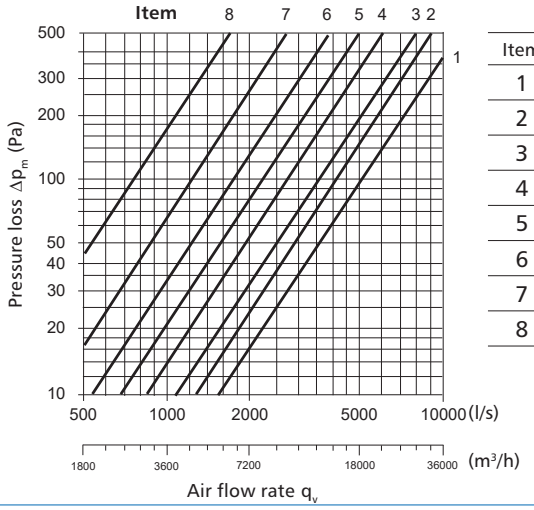

Item	k
1	489.0
2	402.0
3	344.0
4	267.0
5	217.0
6	170.0
7	122.0
8	73.7

ALNOR® ventilation systems
is a registered trademark protected by a technical patent. All modification rights reserved.

Iris damper

GBLM



Description

The GBLM iris dampers can be provided with actuators.
The GBLM iris dampers are used for smooth control of the duct air pressure. The lever and the iris blade mechanism allow changing the clear opening diameter in infinitely variable steps. The iris-type closure allows choking the air flow without turbulence or in-duct noise.
The GBLM iris damper can be installed both in air supply and air exhaust ducts. It also features two output ports as an interface for an air flow meter. The full-clear opening of the iris damper helps with cleaning internal surfaces of the ductwork.

Compatible actuators:
CM24 or CM230 — open/close control

Available materials — Product code examples
GBLM-... — galvanized steel sheet

Product code example
Product code: **GBLM - aaa**

type
Ød$_1$

Dimensions

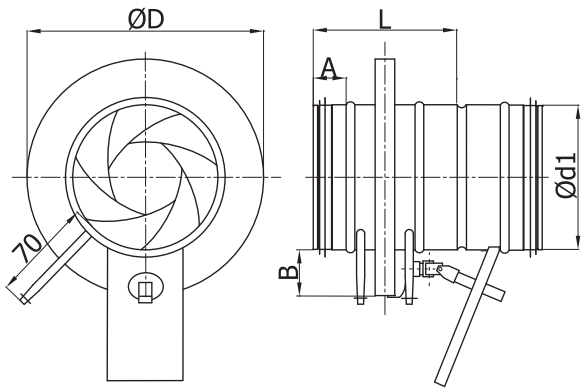

Ød$_{1\ nom}$ (mm)	ØD (mm)	L (mm)	A (mm)	B (mm)	Weight (kg)
80	125	110	30	22	0.5
100	165	110	30	32	0.5
125	188	110	30	32	0.7

ALNOR® ventilation systems
is a registered trademark protected by a technical patent. All modification rights reserved.

Round multi-blade damper

DASQ/DASQL/DASQM/DASQML



Description

The round multi-blade damper can be used to control and isolate air flow in round ductwork.
The round multi-blade damper design is based on the DSQW model. This model, however, features a housing with a branch at each end, sized to match the SPR ducts.
Operating temperature range: -20° to +80° C.
The DASQ / DASQL dampers are hand-operated. The DASQM / DASQML dampers are designed for use with actuators.
All dampers have the blade angle (and the opening ratio) controlled with a system of gears driven by a hand lever or an actuator.
The damper mechanism is installed on the outer surface of the housing.
The dampers meet air tightness class B.

Available materials — Product code examples
DASQL-... — galvanized steel sheet

Product code example
Product code: **DASQL - 800**

type
Ød

Dimensions

DASQ, DASQL

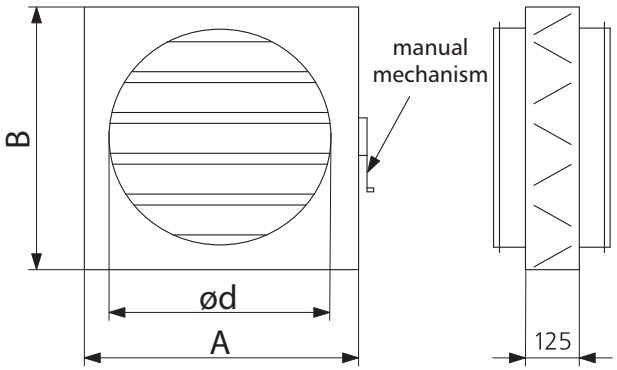

DASQM, DASQML

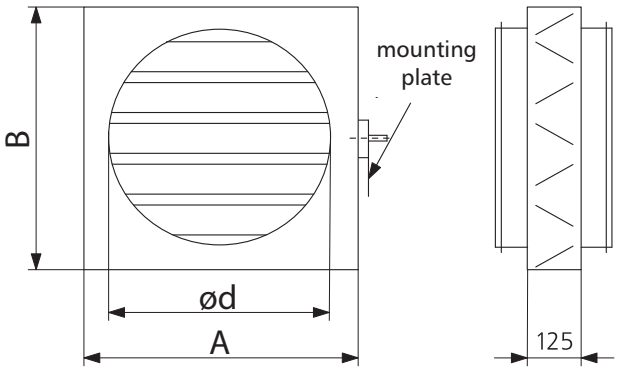

Ød (mm)	A (mm)	B (mm)
400	505	505
450	505	505
500	605	605
560	605	605
630	705	705
710	805	805
800	905	905
900	1005	1005
1000	1105	1105
1120	1205	1205
1250	1305	1305

ALNOR® ventilation systems
is a registered trademark protected by a technical patent. All modification rights reserved.

Rectangular single-blade damper

DSQ

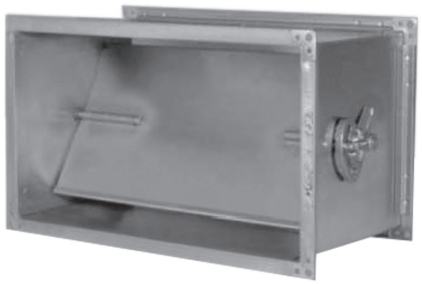

Description

Rectangular single-blade dampers can be used to control and isolate air flow in rectangular ductwork. The damper blade is reinforced by transverse embossing which depends on the product's size.
The damper can have a hand-operated damper mechanism, an externally-mounted actuator, or an actuator mounting.
The hand operation requires turning the control handle, and the damper blade opening angle can be read on the control handle's bezel. The damper blade opening angle can be fixed with two stop screws.
The standard version has a hand-operated damper mechanism.

The dimension A and B sizes ≤ 300 have the KIT-DS-PVC damper mechanism installed. Other dimensions have the KIT-DS damper mechanism installed.

Standard length sizes available:
L = 200 at B ≤ 300
L = 250 at 300 < B ≤ 500
L = 300 at 500 < B ≤ 700

Available materials — Product code examples
DSQ-...-... — galvanized steel sheet

Product code example
Product code: **DSQ - 600 - 400**

type
a
b

Dimensions

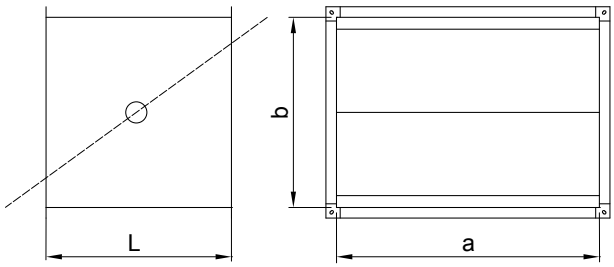

The damper mechanism is installed at the side of length b.

ALNOR® ventilation systems
is a registered trademark protected by a technical patent. All modification rights reserved.

Rectangular multi-blade damper

DSQW



Description

The DSQW rectangular multi-blade dampers can be used to control and isolate air flow in rectangular ductwork. The dampers can be installed in ventilation ducts, as wall-mounted air flow regulators, or AHU air flow regulating and shutoff units. All dampers have a housing made of 4 galvanized steel sheet profiles framed with PQ angles, and a closure consisting of aluminium blades. The blade height is the same for all product sizes.
The DSQW damper can have a hand-operated damper mechanism, an externally-mounted actuator, or an actuator mounting. The damper mechanism is installed on the outer surface of the housing. The damper blade rotation mechanism features short and long shafts rotating by intermeshed gears installed on bearings. The gears are installed on the outer surface of the housing.
If B is between 1000 and 2000 and A ≥ 1000, two separate hand-operated damper mechanisms are provided. The versions with vertical partitions are available for A ≥ 1400.



The DSQW-C version is a special design of the damper that ensures airtightness class C (housing) according to EN 1751:2014-03 standard. The frame is additionally sealed, the gears are placed on the inner side and the bearing mechanisms are sealed with plugs.

Operating temperature: -20˚C to +80˚C.

Available materials - Product code examples

DSQW-...-... - steel housing, galvanized steel sheet blades, mechanism: external mounting

DSQW-C-...-... - steel housing, galvanized steel sheet blades, mechanism: internal mounting, airtightness class C according to EN 1751:2014-03

Product code example

Product code: **DSQW - 600 - 300**

type
a
b

Dimensions

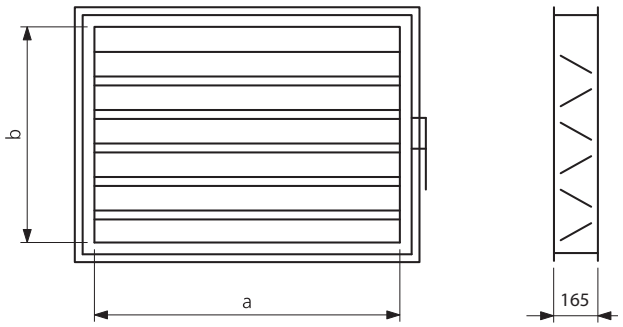

a *(mm)*	*b* *(mm)*
300-2000	300-2000

ALNOR® ventilation systems
is a registered trademark protected by a technical patent. All modification rights reserved.

Rectangular multi-blade damper

DSQW-A



Description

The DSQW-A rectangular multi-blade aluminium dampers can be used to control and isolate air flow in rectangular ductwork. The dampers can be installed in ventilation ducts, as wall-mounted air flow regulators, or AHU air flow regulating and shutoff units.
All dampers have a housing made of 4 aluminium profiles and a closure consisting of aluminium blades. The blade height is the same for all product sizes.
The blades are fitted with gaskets to provide air tightness class 2 as per EN 1751:2003.
The DSQW-A damper can have a hand-operated damper mechanism, an externally-mounted actuator, or an actuator mounting. The damper mechanism is installed on the outer surface of the housing. The damper blade rotation mechanism features short and long shafts rotating by intermeshed gears installed on bearings. The gears are installed on the outer surface of the housing.
If B is between 1000 and 2000 and A ≥ 1000, two separate hand-operated damper mechanisms are provided. The versions with vertical partitions are available for A ≥ 1400.

Operating temperature: -20˚C to +80˚C

Note:
It is recommended that the b dimension size should be chosen as a multiple of 100 mm. Otherwise, DSQW-A will not meet air tightness class 2.

Available materials — Product code examples
DSQW-...-... — aluminium housing, press-formed aluminium blades, 6063-T5 alloy, no surface finish

Product code example
Product code: **DSQW-A - 600 - 300**

type
a
b

Dimensions

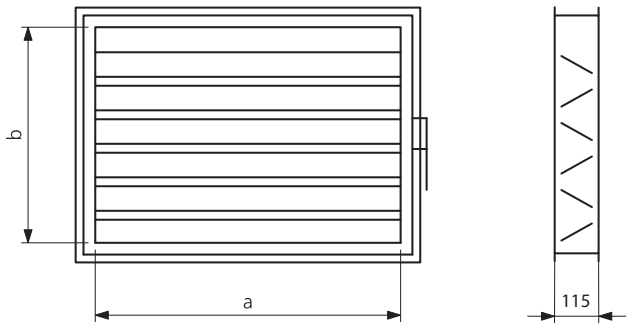

a *(mm)*	*b* *(mm)*
300-2000	300-2000

ALNOR® ventilation systems
is a registered trademark protected by a technical patent. All modification rights reserved.

Rectangular multi-blade damper

DSQW-A

Technical specifications

Air tightness chart according to EN 1751:2003

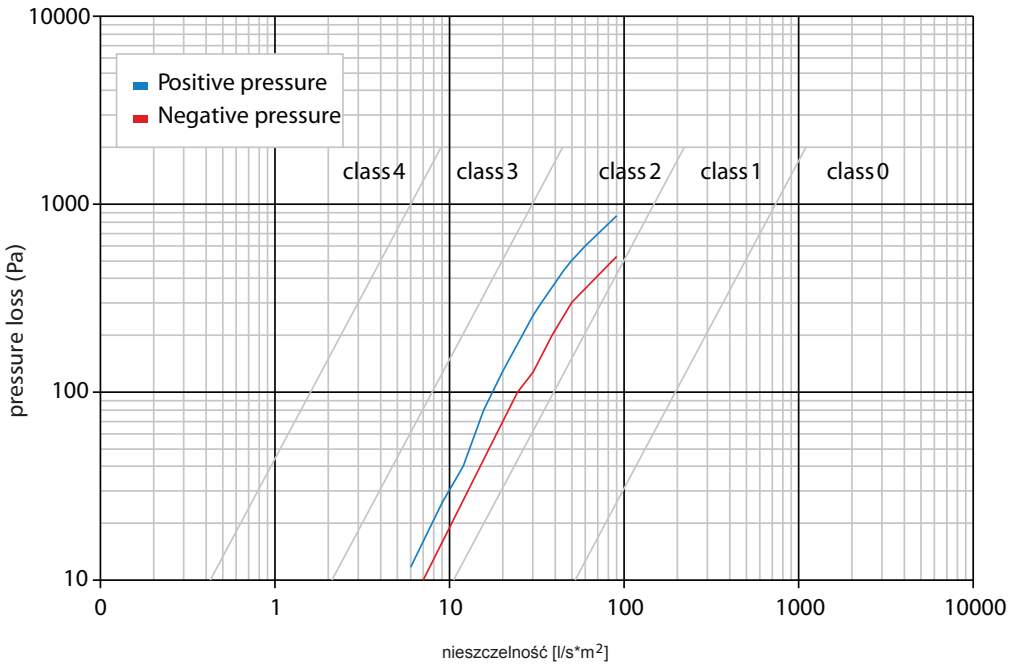

Pressure loss chart

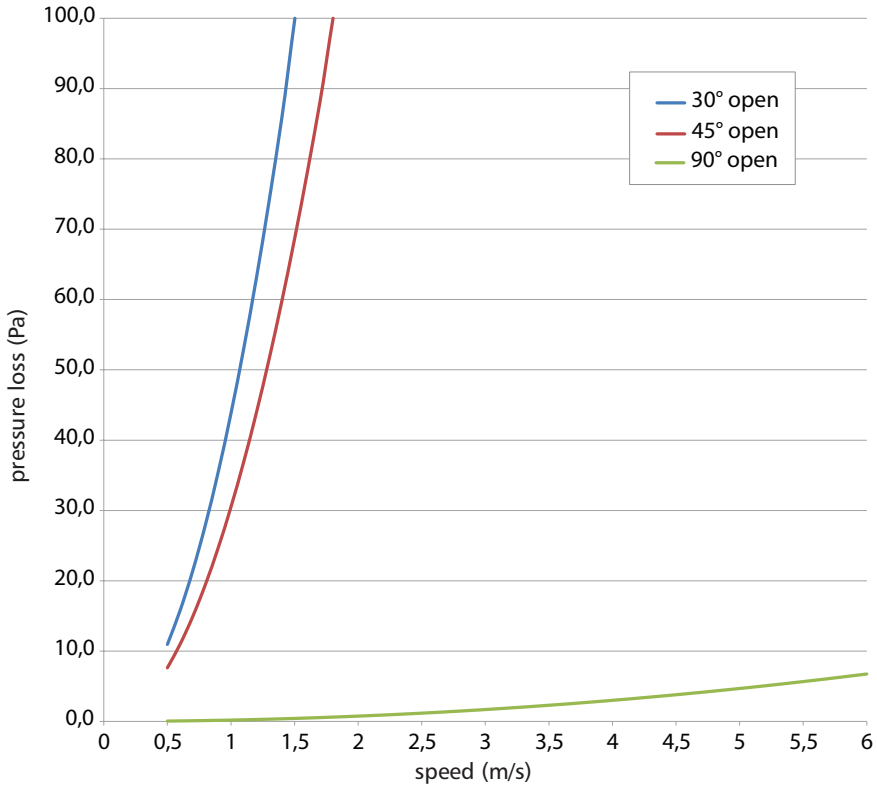

ALNOR® ventilation systems
is a registered trademark protected by a technical patent. All modification rights reserved.

Steel non-return air dampers

DSQOW



Description

The self-closing multi-blade non-return steel dampers with aluminium blades are designed for air pressure control in the ventilation system. The blade design and mounting allow automatic air flow exhaust under the incoming pressure. This prevents overpressurizing the ductwork. The housing is made of galvanized steel angles. The blades are made of aluminium sections.
The air damper is provided with a housing made of 4 angles of the same type as those used in the fabrication of the DSQW air dampers. All blades are provided with sealing gaskets.

The DSQOW air damper features moving aluminium blades, each 80 mm high. The blade height is the same for all product sizes. The blade bearings are fitted inside the upright sections.
The versions with vertical partitions are available for A ≥ 1400 mm and according to these conditions:
for 1400 mm < A ≤ 2100 mm, a single partition is installed;
for A > 2100 mm, multiple partitions are installed.

Operating temperature range: -20˚C to +80˚C

Available materials — Product code examples
DSQOW-...-... — galvanized steel sheet housing
with aluminium sheet blades

Product code example
Product code: **DSQOW - 600 - 300**

type
a
b

Dimensions

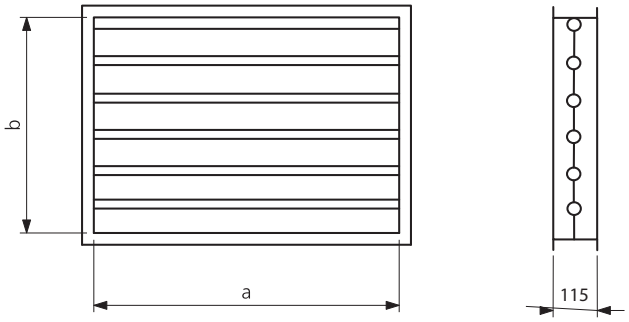

a *(mm)*	*b* *(mm)*
300-2000	300-2000

ALNOR® ventilation systems
is a registered trademark protected by a technical patent. All modification rights reserved.

Self-closing rectangular multi-blade aluminium damper

DSQOW-A



Description

The self-closing multi-blade non-return aluminium dampers are designed for air pressure control in the ventilation system. The blade design and mounting allow automatic air flow exhaust under the incoming pressure. This prevents overpressurizing the ductwork. The housing and the blades are made of aluminium sections.
The air damper is provided a housing made of 4 angles of the same type as those used in the fabrication of the DSQW-A air dampers. EPDM gaskets are installed in the top and bottom housing walls.
The DSQOW-A air damper features moving aluminium blades, each 80 mm high. The blade height is the same for all product sizes. The blade bearings are fitted inside the upright sections.
The versions with vertical partitions are available for A ≥ 1400 mm and according to these conditions:
for 1400 mm < A ≤ 2100 mm, a single partition is installed;
for A > 2100 mm, multiple partitions are installed.

Operating temperature range: -20˚C to +80˚C

Available materials — Product code examples
DSQOW-A...-... — aluminium sheet

Product code example
Product code: **DSQOW-A - 600 - 300**

type
a
b

Dimensions

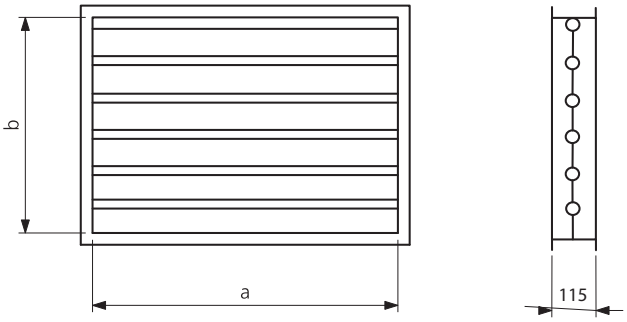

a *(mm)*	*b* *(mm)*
300-2000	300-2000

ALNOR® ventilation systems
is a registered trademark protected by a technical patent. All modification rights reserved.

Self-closing rectangular multi-blade aluminium damper

DSQOW-A

Technical specifications

Pressure loss chart

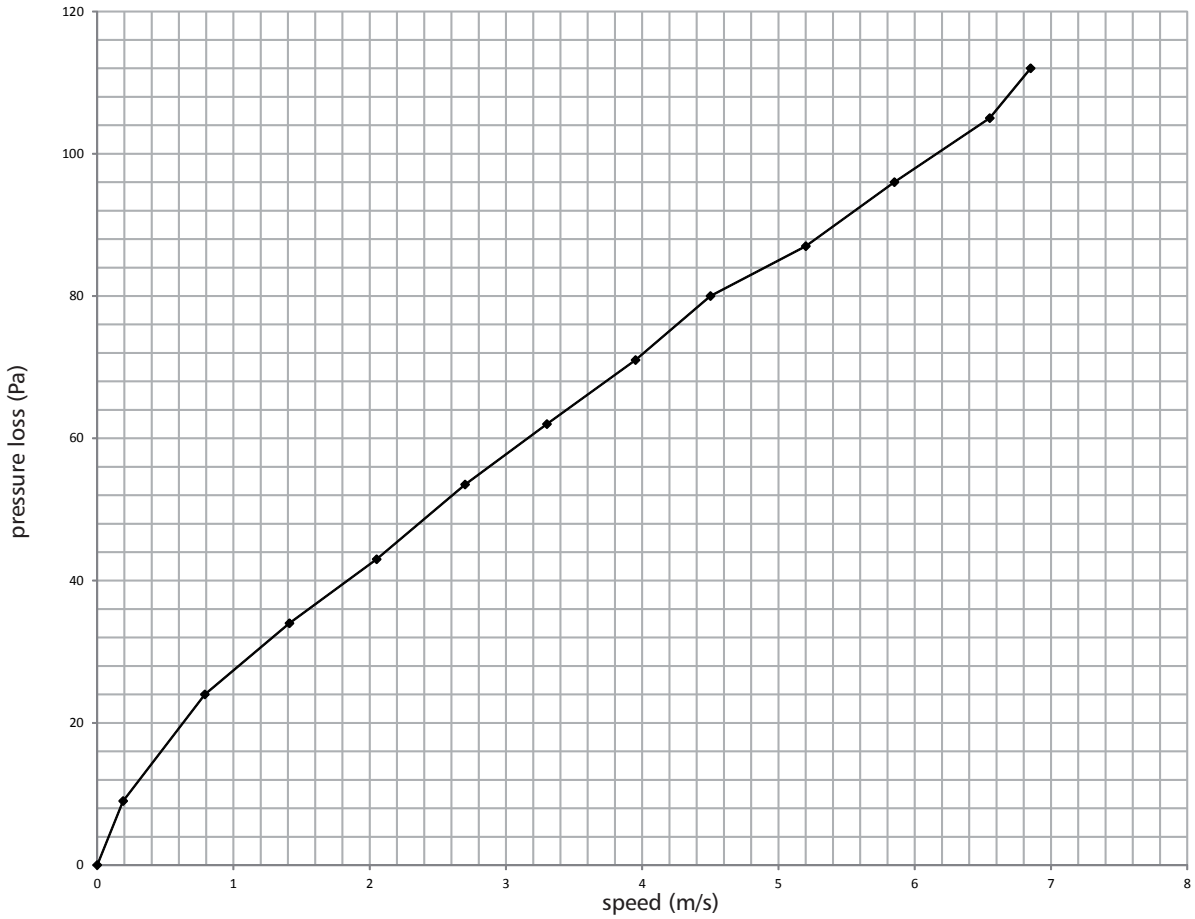

ALNOR® ventilation systems
is a registered trademark protected by a technical patent. All modification rights reserved.

Sealing products

ALNOR reserves the right to modify technical specifications in line with the policy of continuous product improvement.

ALNOR® ventilation systems
is a registered trademark protected by a technical patent. All modification rights reserved.

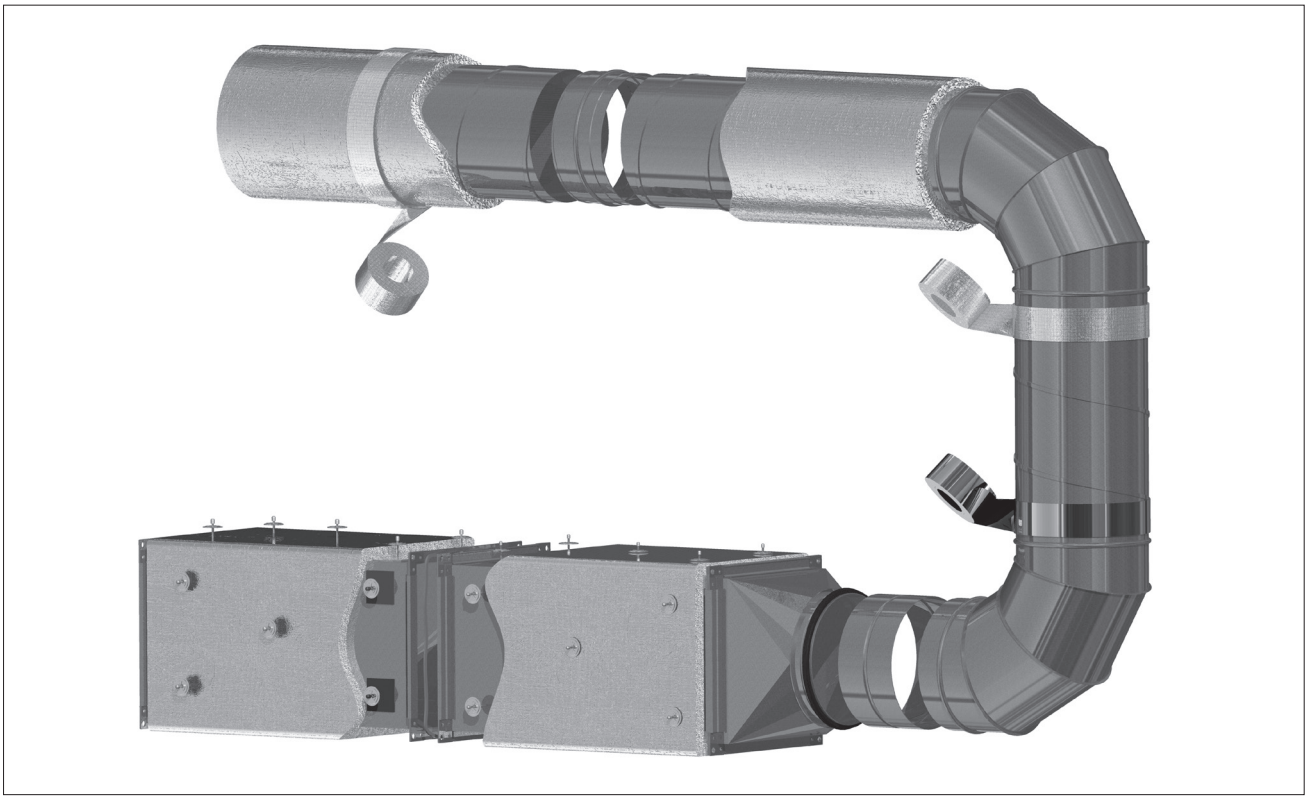

System description

Sealing products are a must for every ventilation ductwork project. They are designed to improve the air tightness of ductwork joints up to the levels acceptable to designers and users according to the design requirements.

Dimensions

All sizes are shown in the tables and specifications in the individual Product Data Sheets.

Installation instructions

The aluminium sealing tapes are applied directly on a degreased metal sheet surface. The sealing effect is provided by wrapping the joint two or three times.

Application advantages

Sealing tapes and silicone sealants are applied as additional seals after building the ductwork. The ease of use and a wide selection of sealing products matching the characteristics of the ductwork helps achieve a neat final appearance. High-temperature sealing tapes guarantee proper air tightness of fireplace air heating ductwork.

Marking

ALNOR products carry the Polish conformity mark B for construction products and product codes as shown in the technical specifications listed in this catalogue.

ALNOR® ventilation systems
is a registered trademark protected by a technical patent. All modification rights reserved.

Aluminium sealing tapes for HVAC systems

TAL

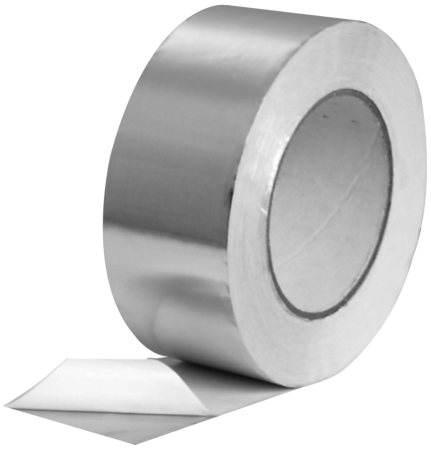

Description

The TAL aluminium sealing tape improves the air tightness of the ductwork joints in HVAC systems. The sealing tape is available in 50-metre and 10-metre reels, 50, 75 and 100 mm wide. Three basic sealing types for HVAC systems are available. The temperature resistance depends on the type of sealing tape as shown in the table below.

TAL — 30-micron aluminium tape for sealing ventilation ducts at air tightness class A or B according to Eurovent's requirements. The acrylic glue provides excellent tack and permanent bonding strength.

TAL-..-..-4 — 40-micron self-adhesive aluminium sealing tape designed for applications which require enhanced resistance to moisture. The acrylic glue is insensitive to water and high temperature variations, which makes this sealing tape a perfect choice for ventilation and air cooling systems.

TAL-25 — self-adhesive aluminium sealing tape with temperature resistance up to +250˚C and high-strength acrylic glue. The 50-micron aluminium foil layer makes this product perfect for fireplace air heating systems.

Note: The recommended storage temperature for sealing tapes is +21˚C at relative humidity up to 50% to preserve the maximum adhesive performance. Sealing tape should also be protected from direct sunlight.

Product code example

Product code: **TAL - 50 - 50**

type
widtg B
length

Dimensions

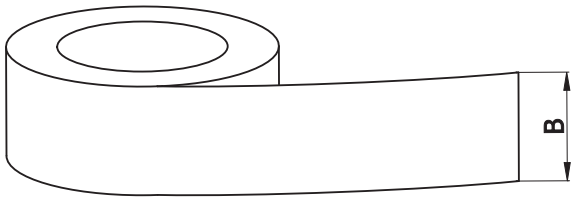

Product code	*width B (mm)*	*length (m)*	*package (pcs)*	*min. temp. (˚C)*	*max. temp. (˚C)*
TAL-50-50	50	50	24	-20	+120
TAL-75-50	75	50	16	-20	+120
TAL-100-50	100	50	12	-20	+120
TAL-50-10	50	10	272	-20	+120

thickness: 30 microns

Product code	*width B (mm)*	*length (m)*	*package (pcs)*	*min. temp. (˚C)*	*max. temp. (˚C)*
TAL-50-50-4	50	50	24	-20	+120
TAL-75-50-4	75	50	16	-20	+120

thickness: 40 microns

Product code	*width B (mm)*	*length (m)*	*package (pcs)*	*min. temp. (˚C)*	*max. temp. (˚C)*
TAL-25 50-50	50	50	24	-20	+250
TAL-25 75-50	75	50	16	-20	+250
TAL-25 100-50	100	50	12	-20	+250
TAL-25-50-10	50	10	72	-20	+250

thickness: 40 microns

ALNOR® ventilation systems
is a registered trademark protected by a technical patent. All modification rights reserved.

Technical specifications

TAL

Properties	*Unit*	*Value*	*Test method*
Thickness	microns	30	PSTC-33 / ASTM D3652
Adhesion	N/25 mm	20	PSTC-1 / ASTM D3330
Tack Rolling Ball	cm	20	PSTC-6 / ASTM D3121
Strength	N/25 mm	37.5	PSTC-31 / ASTM D3759
Stretchability	%	3.0	PSTC-31 / ASTM D3759
Temp. resistance	°C	-20 to +120	–
Application temp.	°C	+10 to +40	–

TAL-...-...-4

Properties	*Unit*	*Value*	*Test method*
Thickness	microns	40	PSTC-33 / ASTM D3652
Adhesion	N/25 mm	20	PSTC-1 / ASTM D3330
Tack Rolling Ball	cm	20	PSTC-6 / ASTM D3121
Strength	N/25 mm	50	PSTC-31 / ASTM D3759
Stretchability	%	3.0	PSTC-31 / ASTM D3759
Temp. resistance	°C	-20 to +120	–
Application temp.	°C	+10 to +40	–

TAL-25

Properties	*Unit*	*Value*	*Test method*
Thickness	microns	50	PSTC-33 / ASTM D3652
Adhesion	N/25 mm	20	PSTC-1 / ASTM D3330
Tack Rolling Ball	cm	20	PSTC-6 / ASTM D3121
Strength	N/25 mm	70	PSTC-31 / ASTM D3759
Stretchability	%	3.5	PSTC-31 / ASTM D3759
Temp. resistance	°C	-20 to +250	–
Application temp.	°C	+10 to +40	–

ALNOR® ventilation systems
is a registered trademark protected by a technical patent. All modification rights reserved.

High-temperature sealing tape for fireplace ductwork
TALK

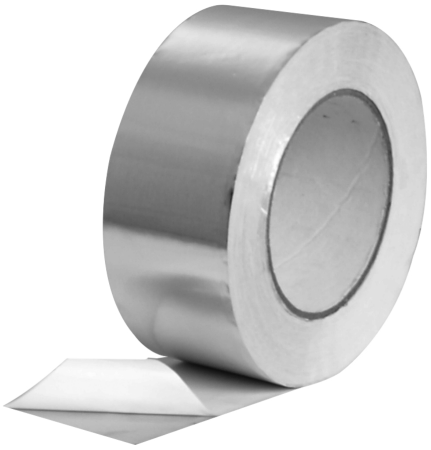

Description

The TALK high-temperature sealing tape is made from a 50-micron thick aluminium foil and acrylic glue of superior tack and permanent bonding strength. The materials used in the product provide temperature resistance up to 350˚C. This allows sealing of air heating ductwork of fireplaces and ducted heating units (electric fan coils, hot water coils and gas heaters).

Note: The recommended storage temperature for sealing tapes is +21˚C at relative humidity up to 50% to preserve the maximum adhesive performance. Sealing tape should also be protected from direct sunlight.

Product code example

Product code: **TALK - 50 - 50**

type
width B
length

Dimensions

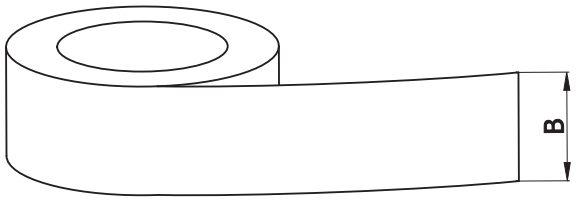

Product code	width B (mm)	length (m)	package (pcs)	min. temp. (˚C)	max. temp. (˚C)
TALK-50-50	50	50	24	-30	+350
TALK-75-10	75	10	16	-30	+350

Technical specifications

Properties	Unit	Value	Test method
Thickness	microns	50	PSTC-33 / ASTM D3652
Adhesion	N/25 mm	18	PSTC-1 / ASTM D3330
Tack Rolling Ball	cm	20	PSTC-6 / ASTM D3121
Strength	N/25 mm	70	PSTC-31 / ASTM D3759
Stretchability	%	3.5	PSTC-31 / ASTM D3759
Fire resistance	(25 / 50 & Class O)	Passed	UL 723 & BS476 Pt 6 & 7
Temp. resistance	˚C	-30 to +350	–
Application temp.	˚C	+10 to +40	–

ALNOR® ventilation systems
is a registered trademark protected by a technical patent. All modification rights reserved.

Aluminium tape
TALT



Description

The 1 mm thick aluminium sealing tape is based on self-adhesive butyl rubber. It is designed for sealing connections between round and flexible ducts and fittings. The aluminium foil is 40-micron thick.

Note: The recommended storage temperature for sealing tapes is +21˚C at relative humidity up to 50% to preserve the maximum adhesive performance. Sealing tape should also be protected from direct sunlight.

Product code example

Product code: **TALT - 50 - 40**

type
width B
length

Dimensions

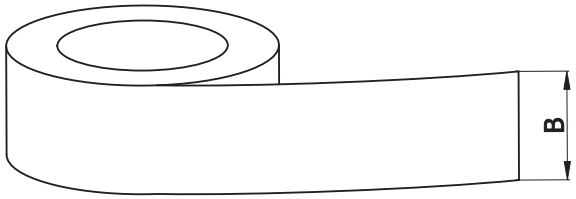

Product code	*width B (mm)*	*length (m)*	*package (pcs)*	*min. temp. (˚C)*	*max. temp. (˚C)*
TALT-50-50	55	40	6	-40	+90

Technical specifications

Properties	*Unit*	*Value*	*Test method*
Thickness	microns	40	PSTC-33 / ASTM D3652
Tack Rolling Ball	cm	20	PSTC-6 / ASTM D3121
Strength	N/25 mm	70	PSTC-31 / ASTM D3759
Stretchability	%	3.5	PSTC-31 / ASTM D3759
Fire resistance	(25 / 50 & Class O)	Passed	UL 723 & BS476 Pt 6 & 7
Temp. resistance	˚C	-40 to +90	–
Application temp.	˚C	+10 to +40	–

Adhesive strength

Material	*Adhesion (N/cm)*
aluminium	14.3
steel	17.7
cement	16.5
copper	15.6
FRP	14.8

ALNOR® ventilation systems
is a registered trademark protected by a technical patent. All modification rights reserved.

Reinforced aluminium sealing tape for mineral wool insulation with cladding

TALE



Description

The TALE reinforced aluminium sealing tape is designed for air tight sealing of HVAC systems installed in industrial facilities, single- or multi-family housing. The 30-micron aluminium foil is backed with a 5x5 mm glass fibre mesh for improved tearing and stretchability. Acrylic glue provides good bonding strength throughout the service life of the ductwork. This tape is also perfect for sealing Lamella Mat mineral wool cladding because the aluminium sealing tape and its reinforcing mesh have the same structure.

Note: The recommended storage temperature for sealing tapes is +21°C at relative humidity up to 50% to preserve the maximum adhesive performance. Sealing tape should also be protected from direct sunlight.

Product code example

Product code: **TALE - 50 - 50**

typ
width B
length

Dimensions

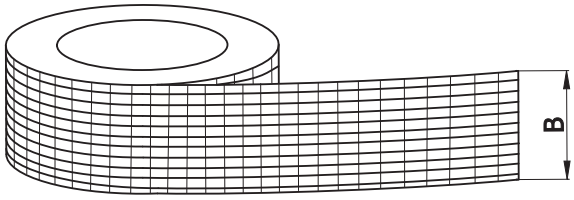

Product code	width B (mm)	length (m)	package (pcs)	min. temp. (°C)	max. temp. (°C)
TALE-50-50	50	50	24	-20	+120
TALE-75-50	75	50	16	-20	+120
TALE-100-50	100	50	12	-20	+120

Technical specifications

Properties	Unit	Value	Test method
Thickness	microns	40	PSTC-33 / ASTM D3652
Adhesion	N/25 mm	18	PSTC-1 / ASTM D3330
Tack Rolling Ball	cm	20	PSTC-6 / ASTM D3121
Strength	N/25 mm	70	PSTC-31 / ASTM D3759
Stretchability	%	3.0	PSTC-31 / ASTM D3759
Temp. resistance	°C	-20 to +120	–
Application temp.	°C	+10 to +40	–

ALNOR® ventilation systems
is a registered trademark protected by a technical patent. All modification rights reserved.

Reinforced aluminium sealing tape with diamond mesh

TLV



Description

The TLV reinforced aluminium sealing tape with diamond mesh is designed for air tight sealing of ventilation and A/C ductwork systems. The 30-micron aluminium foil is backed with a diamond-weave glass fibre mesh for improved tearing and stretchability. The acrylic glue is highly resistant to moisture and ageing, while providing good tack during application.

Note: The recommended storage temperature for sealing tapes is +21˚C at relative humidity up to 50% to preserve the maximum adhesive performance. Sealing tape should also be protected from direct sunlight.

Product code example

Product code: **TLV - 50 - 50**

type
width B
length

Dimensions

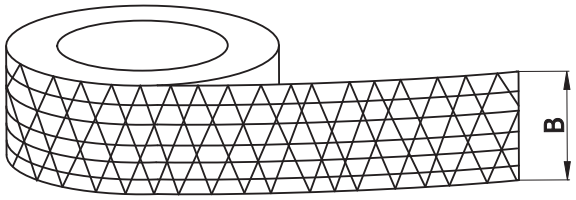

Product code	*width B (mm)*	*length (m)*	*package (pcs)*	*min. temp. (˚C)*	*max. temp. (˚C)*
TLV-50-50	50	50	24	-30	+80
TLV-75-50	75	50	16	-30	+80
TLV-100-50	100	50	12	-30	+80

Technical specifications

Properties	*Unit*	*Value*	*Test method*
Thickness	microns	125	PSTC-33 / ASTM D3652
Adhesion	N/25 mm	20	PSTC-1 / ASTM D3330
Tack Rolling Ball	cm	20	PSTC-6 / ASTM D3121
Strength	N/25 mm	120	PSTC-31 / ASTM D3759
Stretchability	%	3.0	PSTC-31 / ASTM D3759
Temp. resistance	˚C	-30 to +80	–
Application temp.	˚C	+10 to +40	–

ALNOR® ventilation systems
is a registered trademark protected by a technical patent. All modification rights reserved.

Universal duct tape

DUCT



Description

The DUCT tape is a true all-rounder of all self-adhesive sealing tapes: it sticks to metal sheets, ducts, plastics, packaging materials and many more surface types. Good stretchability, easy tear-off, high resistance to moisture and adhesion to rough surfaces are its primary advantages which favour the use for sealing of ventilation ducts. This product is made from PE and synthetic rubber glue. The backing is reinforced with a 27-mesh textile. The overall grey tape thickness is 150 microns to ensure good strength of sealing layers.

Type of adhesive: rubber glue

Tape thickness: 0.15 mm

Temperature resistance: +10˚C to +60˚C

Adhesion: 4 (N/25 mm)

Note: The recommended storage temperature for sealing tapes is +21˚C at relative humidity up to 50% to preserve the maximum adhesive performance. Sealing tape should also be protected from direct sunlight.

Product code example

Product code: **DUCT - aaa**

type

width B

Dimensions

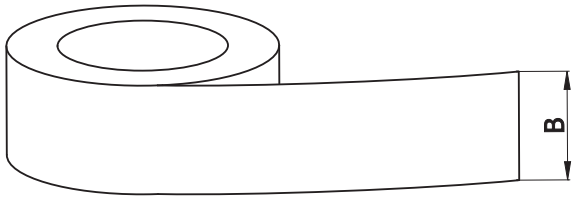

Product code	*width B (mm)*	*length (m)*	*package (pcs)*	*min. temp. (˚C)*	*max. temp. (˚C)*
DUCT-50-50	50	50	24	+10	+60

Technical specifications

Properties	*Unit*	*Value*	*Test method*
Thickness	microns	150	PSTC-33 / ASTM D3652
Adhesion	N/25 mm	12	PSTC-1 / ASTM D3330
Tack Rolling Ball	cm	15	PSTC-6 / ASTM D3121
Strength	N/25 mm	12	PSTC-31 / ASTM D3759
Stretchability	%	15.0	PSTC-31 / ASTM D3759
Temp. resistance	˚C	+10 to +60	–
Application temp.	˚C	+10 to +40	–

ALNOR® ventilation systems
is a registered trademark protected by a technical patent. All modification rights reserved.

Temperature-resistant flexible sealing tape
MET



Description

The MET temperature-resistant flexible sealing tape is made from cross-metallised polypropylene with water-based acrylic glue. The tape has no carcass and can be applied from the reel directly onto the surface to be sealed. The main advantage of this sealing tape is high resistance to frequent cool/warm temperature variations, superior flexibility and excellent conformability to irregular surfaces. This tape is perfect for sealing flexible ventilation and A/C ducts.

Type of material: metallised PP film

Type of adhesive: acrylic glue

Tape thickness: 0.05 mm

Temperature resistance: -20˚C to +80˚C

Adhesion: 5.6 (N/25 mm)

Note: The recommended storage temperature for sealing tapes is +21˚C at relative humidity up to 50% to preserve the maximum adhesive performance. Sealing tape should also be protected from direct sunlight.

Product code example

Product code: **MET - aaa**

typ
width B

Dimensions

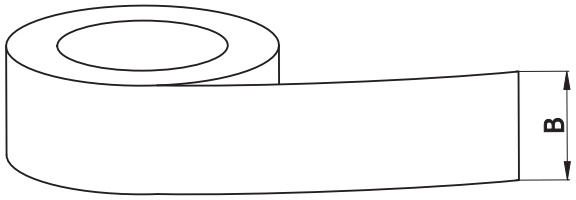

Kod	*width B [mm]*	*length [mb]*	*opak [szt]*	*temp. min. [˚C]*	*temp. max. [˚C]*
MET-50-50	50	50	24	-20	+80
MET-75-50	75	50	16	-20	+80

Technical specifications

Properties	*Unit*	*Value*	*Test method*
Thickness	microns	65	PSTC-33 / ASTM D3652
Thickness of backing material	microns	38	PSTC-33 / ASTM D3652
Adhesion	N/25 mm	8	PSTC-1 / ASTM D3330
Tack Rolling Ball	cm	8	PSTC-6 / ASTM D3121
Strength	N/25 mm	95	PSTC-31 / ASTM D3759
Stretchability	%	150	PSTC-31 / ASTM D3759
Temp. resistance	˚C	-20 to +80	–
Application temp.	˚C	+10 to +40	–

ALNOR® ventilation systems
is a registered trademark protected by a technical patent. All modification rights reserved.

PVC sealing tape for insulating rubber mats & plenum boxes

TAPV-B, TAPV-S

TAPV-B



TAPV-S



Description

The PVC sealing tape is 180-200 micron thick with synthetic rubber adhesive on one side. The tape is designed for sealing connections between round and flexible ducts and fittings. Once applied, it effectively protects ducts and fittings against weather conditions and the ingress of moisture. The adhesive seal is very durable and air tight.

TAPV-B — black sealing tape for rubber mat joints
TAPV-S — grey sealing tape for galvanized steel sheet joints

Available length: 20 m.
Application temperature: -10˚C to +80˚C
Minimum application temperature: +10˚C

Note: The recommended storage temperature for sealing tapes is +21˚C at humidity up to 50% to preserve the maximum adhesive performance. Sealing tape should also be protected from direct sunlight.

Product code example
Product code: **TAPV-B - 50 - 20**

type
width B
length

Dimensions

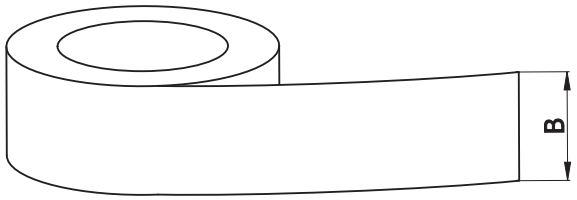

Product code	*width B (mm)*	*length (m)*	*package (pcs)*	*min. temp. (˚C)*	*max. temp. (˚C)*
TAPV-B-50-20	50	20	72	-10	+80
TAPV-S-50-20	50	20	72	-10	+80

ALNOR® ventilation systems
is a registered trademark protected by a technical patent. All modification rights reserved.

Self-adhesive elastomeric tape

FOAM-TAPE



Description

FOAM-TAPE Self-adhesive rubber foam tape is intended for insulation of ventilation systems, joining rubber foam sheets and insulating irregular shapes. Surface, to which FOAM-TAPE is applied, must be dry and clean and the temperature should be above 4˚C.

Width: 50 lub 75 mm
Lenght: 15 m
Thickness: 3 mm

Product code example
Kod product code: **FOAM-TAPE - 50 - 15**

type
width B
lenght

Dimensions

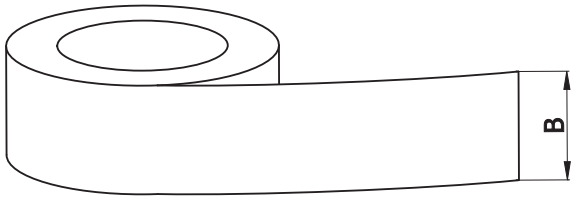

Code	*Width B [mm]*	*Lenght [m]*	*Thickness [mm]*
FOAM-TAPE-50-15	50	15	3
FOAM-TAPE-70-15	75	15	3

Technical data

Parameter	*Standard*	*Value*
Thermal conductivity λ W/(m²K)	EN 12667	0.032 (-20˚C)
Water vapour diffusion resistance μ	EN 12086	μ ≥ 7000
Temperature range	EN 14706	-40˚C / +85˚C
Density kg/m³		45-60
Reaction to fire classification	EN 13501-1	B-s3, d0

Installation method





1. Connect preinsulated elements.





2. Remove the release paper and secure the joint connection with an adhesive FOAM-TAPE.

ALNOR® ventilation systems
is a registered trademark protected by a technical patent. All modification rights reserved.

Self-adhesive pins for ductwork insulation systems
GWS

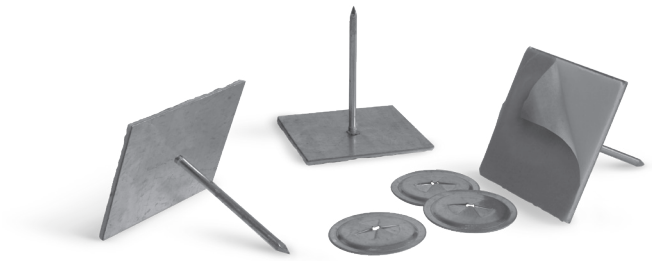

Description

The GWS self-adhesive pins are attached to the plain ductwork surface with a self-adhesive foam patch, providing spikes to which thermal insulation can be attached without piercing the ductwork walls.
Available sets include GWS pins and KLP clips. KNY caps are sold separately.
A total of 6 to 10 GWS self-adhesive pins are recommended for a surface area of 1 m².

Available materials — Product code examples
GWS-... — galvanized steel sheet

Product code example
Product code: **GWS-33**

type

Dimensions

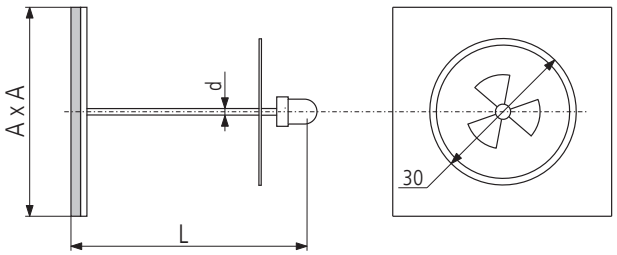

cap
KNY



self-adhesive
pin clip
KLP

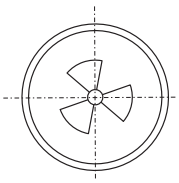

Product code	*L (mm)*	*d (mm)*	*A (mm)*
GWS-25	25	2.7	50
GWS-33	33	2.7	50
GWS-43	43	2.7	50
GWS-53	53	2.7	50
GWS-63	53	2.7	50
GWS-76	76	2.7	50
GWS-103	103	2.7	50
GWS-115	115	2.7	50

ALNOR® ventilation systems
is a registered trademark protected by a technical patent. All modification rights reserved.

Hot-weld pins for HVAC insulation systems
GWZ



Description

The GWZ hot-weld pins are attached to the plain ductwork surface with the welded butt end, providing spikes to which thermal insulation can be attached without piercing the ductwork walls. Available sets include only GWZ pins. KLP-Z clips and KNY caps are sold separately.
A total of 6 to 10 GWZ self-adhesive pins are recommended for a surface area of 1 m².

Available materials — Product code examples
GWZ-... — galvanized steel sheet

Product code example
Product code: **GWZ-33**

type

Dimensions

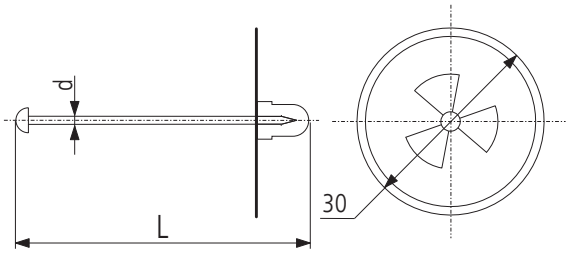

cap
KNY

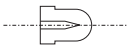

hot-weld
pin
clip
KLP-Z

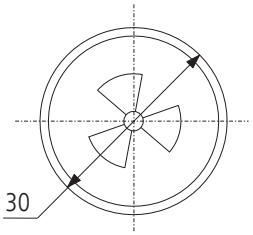

Product code	*L (mm)*	*d (mm)*
GWZ-25	25	2.2
GWZ-33	33	2.2
GWZ-43	43	2.2
GWZ-53	53	2.2
GWZ-63	53	2.2
GWZ-105	105	2.2
GWZ-115	115	2.2

ALNOR® ventilation systems
is a registered trademark protected by a technical patent. All modification rights reserved.

Hot-weld pins for thermal insulation layers

GWZ-PI

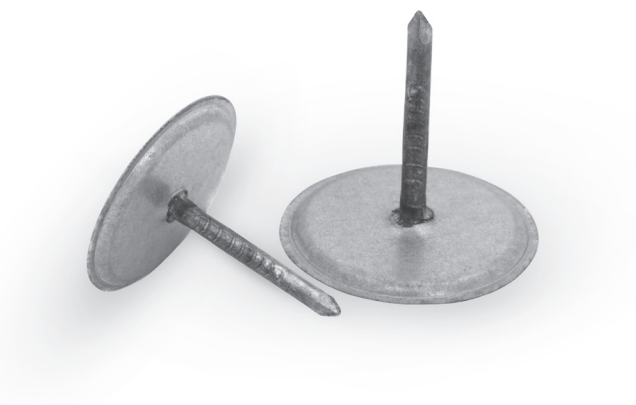

Description

The GWZ-PI hot-weld pins are designed for fastening thermal insulation layers in plain ducts. The pins are fastened by welding the round foot to the plain duct with hand-held resistive pressure welders with sufficient power output. This provides durable fastening without any damage to the ductwork walls.

Available materials — Product code examples
GWZ-PI-... — galvanized steel sheet

Product code example
Product code: **GWZ-PI-30**

type

Dimensions

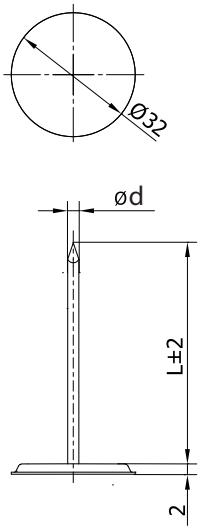

Product code	*L (mm)*	*d (mm)*
GWZ-PI-30	30	2.7
GWZ-PI-40	40	2.7
GWZ-PI-50	50	2.7
GWZ-PI-60	60	2.7
GWZ-PI-100	100	2.7

ALNOR® ventilation systems
is a registered trademark protected by a technical patent. All modification rights reserved.

Perforated pins
GWP

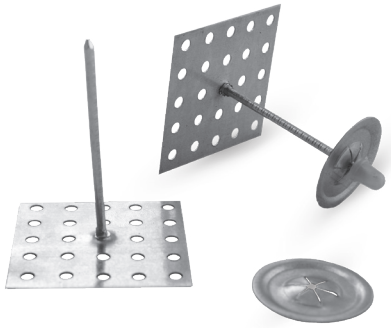

Description

The GWP glued perforated foot pins are designed for fastening thermal insulation layers in plain ducts by attaching the perforated foot using an adhesive layer.
Available sets include GWP pins and KLP clips. KNY caps are sold separately.
A total of 6 to 10 GWP self-adhesive pins are recommended for a surface area of 1 m².

Product code example
Product code: **GWP-33**

type

Dimensions

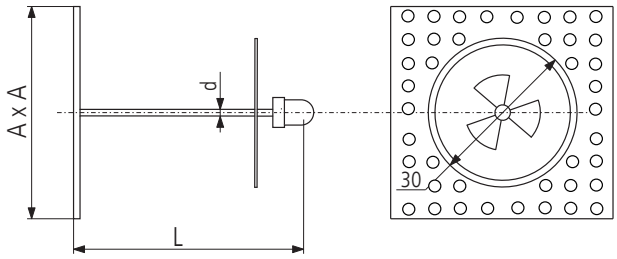

cap
KNY



self-adhesive
pin
clip
KLP

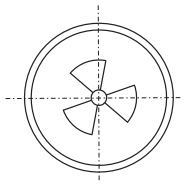

Product code	*L (mm)*	*d (mm)*	*A (mm)*
GWP-20	20	2.8	50
GWP-25	25	2.8	50
GWP-33	33	2.8	50
GWP-43	43	2.8	50
GWP-53	53	2.8	50
GWP-63	53	2.8	50
GWP-67	67	2.8	50
GWP-76	76	2.8	50
GWP-83	83	2.8	50
GWP-90	90	2.8	50
GWP-95	95	2.8	50
GWS-105	105	2.8	50
GWS-115	115	2.8	50
GWP-125	125	2.8	50

ALNOR® ventilation systems
is a registered trademark protected by a technical patent. All modification rights reserved.

Square duct seal

USZ, USZ-CER

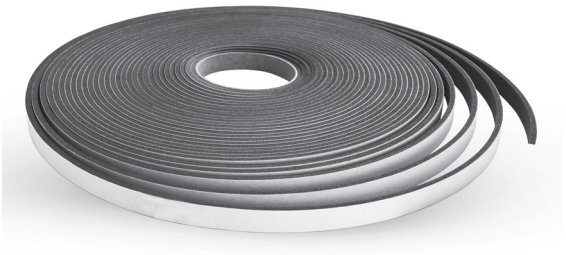

Description

The USZ duct seals are made of self-adhesive polyethylene strips. They have temperature resistance up to 80˚C.
The USZ-CER ceramic seals provide temperature resistance up to 1100˚C. The backing layer is made from aluminosilicate fiber felt. The adhesive material is based on modified acryl.
The USZ and USZ-CER duct seals are installed in ductwork flanges and at the connections of AHUs to improve the air tightness of joints. The USZ-CER duct seals are perfect for air-tight sealing of fire-resistant and refractory ducts.

Specifications of USZ-CER seals:

Fibre diameter	3.2 µm
Density	200-300 kg/m^3
Tensile strength	> 350 kPa or 15.4 N/cm
Maximum operating temperature	1100˚C
Melting point	> 1300˚C
Heat transfer coefficient	0.09 W/mK

Product code example

Product code: **USZ - 10 - 04**

typ
width
thickness

Dimensions

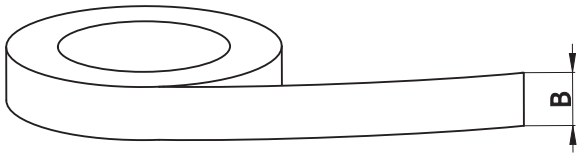

Product code	*Width B (mm)*	*Thickness (mm)*	*Length (mm)*
USZ09-04	9	4	20
USZ10-03	10	3	15
USZ10-04	10	4	15
USZ12-03	12	3	20
USZ12-04	12	4	20
USZ15-04	15	4	20
USZ20-04	20	4	20

Product code	*Width B (mm)*	*Thickness (mm)*	*Length (mm)*
USZ-CER-10-04	10	4	20
USZ-CER-17-04	17	4	20

ALNOR® ventilation systems
is a registered trademark protected by a technical patent. All modification rights reserved.

Acrylic sealants

SIL-AKR..



Description

An acrylic-based sealing product for round ventilation ducts. The product contains no harmful solvents or odours. Once installed, the duct seal provides flexible joints, which can be coated with paint, ensuring excellent adhesion to galvanized steel sheets, coated steel sheets or stainless steel sheets. Once the duct seal compound has cured, it resists varying weather conditions. The product is intended for indoor and outdoor use.
When fully cured, the duct seal compound is waterproof.

Product code example
Product code: **SIL-AKR-5K**

type

Dimensions

Volume: 5 l and 20 l

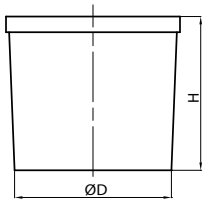

Volume: 310 ml

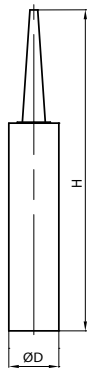

Volume	*ØD (mm)*	*H (mm)*
310 ml	50	340
5L	200	320
20L	320	320

Technical specifications

Product code	*Volume*	*Material*	*Density*	*Method of application*	*Thermal resistance*	*Colour*	*Intended use*
SIL-AKR-5K	5 l	acrylic com-pound	1.05 kg/l	brush	-40˚C to +80˚C (100˚C)	silver grey	sealing of round ducts and fittings
SIL-AKR-20L	20 l	acrylic com-pound	1.5 kg/l	PIS-POMP	-40˚C to +70˚C	grey	sealing of round and square ducts and fittings
SIL-AKR-310	310 ml	acryl	1.5 kg/l	PIS-REC	-40˚C to +80˚C	grey	sealing of round and square ducts and fittings

ALNOR® ventilation systems
is a registered trademark protected by a technical patent. All modification rights reserved.

Roofwork and acetate sealants

SIL-UNI-OCT-300



Description

Roofwork sealants are intended for caulking the flashing sheets of roofs, patios, chimneys and all roof penetrations. They are perfects for air- and watertight sealing of corrugated and box profile sheets. Once applied, the sealant retains its flexibility and does not crack when the structural parts expand, contract or shift.
Acetate sealants are single-component flexible caulks based on acetate compounds. They provide durable and flexible sealing layers resistant to weathering.

Product code example
Product code: **SIL-UNI-OCT-300**

type

Dimensions

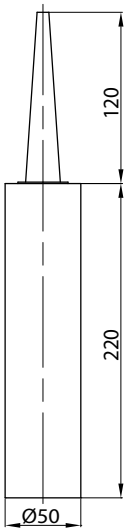

Technical specifications

Product code	*Volume*	*Material*	*Density*	*Method of application*	*Thermal resistance*	*Colour*	*Intended use*
SIL-UNI-OCT-300	300 ml	acetate silicone compound	1.0 - 1.3 kg/l	PIS-REC	-40˚C to +180˚C	grey	sealing of hemmed and seamed stainless steel sheets

ALNOR® ventilation systems
is a registered trademark protected by a technical patent. All modification rights reserved.

Caulking foams

PIA-MON..



Description

Caulking foams can be used as thermal insulation layers, sound proofing systems or joint stopping between structural components. They feature superior thermal- and sound-insulating performance.
Another advantage of the caulking foams is high tensile and shear strength. They can also be applied at sub-zero temperatures to -10˚C.

Product code example
Product code: **PIA-MON**

type

Dimensions

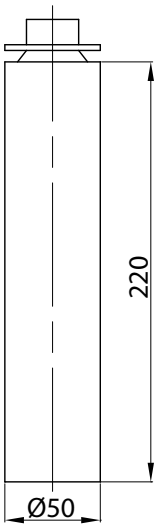

Technical specifications

Product code	*Volume*	*Material*	*Density*	*Method of application*	*Thermal resistance*	*Colour*	*Intended use*
PIA-MON	500 ml	PU caulking foam	0.027 kg/l	manual	-40°C to +130°C	yellow	caulking and filling material for sealing of ductwork penetrations in walls
PIA-MON-PIS	750 ml	PU caulking foam	0.027 kg/l	PIS-MONT	-60°C to +100°C	yellow	caulking and filling material for sealing of ductwork penetrations in walls

ALNOR® ventilation systems
is a registered trademark protected by a technical patent. All modification rights reserved.

Fire-proof silicones

SIL-PPOZ..



Description

Fire-proof silicone are single-component sealing compounds with an acetate-based curing system. Seals based on this product are durable and completely impervious do decomposition by oils or weathering.
Fire-proof silicones are designed for sealing surfaces exposed to temperatures up to 250˚C, including chimney stacks, heating units and ventilation systems.

Product code example
Product code: **SIL-PPOZ-OCT-300**

type

Dimensions

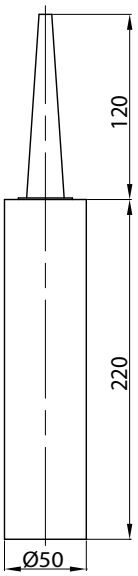

Technical specifications

Product code	*Volume*	*Material*	*Density*	*Output*	*Method of application*	*Thermal resistance*	*Colour*
SIL-PPOZ-OCT-300	300 ml	polysiloxane	1.3 kg/l	300 ml provide approximately an 18-metre seal of 4x4 mm	PIS-REC	-40°C to +250°C (+350°C)	red

ALNOR® ventilation systems
is a registered trademark protected by a technical patent. All modification rights reserved.

Pumps

PIS-POMP



Description

The pneumatic piston pump can transfer and batch out liquid products such as sealants.
The product includes a pneumatic piston pump, an air treatment unit, and a plain PTFE hose with stainless steel couplings.

Technical parameters:

Ratio	4:1
Pneumatic motor	3"
Supply	1.5 to 103 bar
Max pressure output	- 41.4 bar
Max capacity	- 8.062 l/min
Strokes	- 120/min
Air supply port size	- 1/4"
Pump outlet port size	- 3/4", female
Max flow rate	- 50 dm3/s
Max operating temperature	- 50°C

Product code example
Product code: **PIS-POMP**

type

Dimensions

Pneumatic piston pump

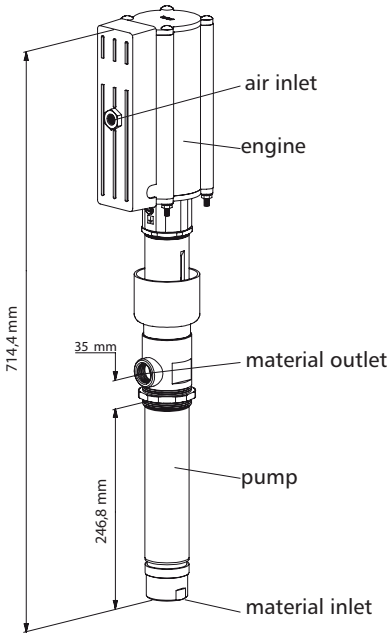

Air treatment unit

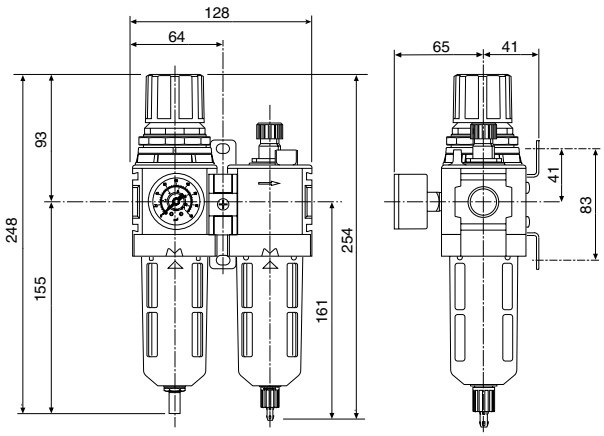

ALNOR® ventilation systems
is a registered trademark protected by a technical patent. All modification rights reserved.

Spray for steel protection and repair

OCSP



Description

The OCSP aluminium zinc spray provides a durable protective coat on spot-repaired steel surfaces. It has excellent adhesion to different metal types and high resistance to water, salt and weathering, high temperature and abrasion.
This spray is a perfect solution for protecting roof sheeting, spot welds and seam welds.

Technical parameters:
Capacity: 500 ml
Colour: silver
Auto-ignition temperature: > 370˚C
Density at 20˚C: 0.89 - 1.01 g/cm³

Note: Pressurized container — keep away from direct sunlight and temperatures above 50˚C.

Product code example
Product code: **OCSP**

type

Dimensions

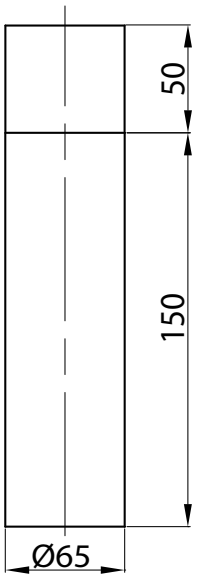

ALNOR® ventilation systems
is a registered trademark protected by a technical patent. All modification rights reserved.

Spray for steel protection and repair

ESLA



Description

The ESLA spray provides a durable protective coat on spot-repaired stainless steel surfaces. I has excellent adhesion to metallic substrates and is resistant to abrasion.

Technical parameters:
Operating temperature: -35˚C to +100˚C.

Product code example
Product code: **ELSA**

type

Dimensions

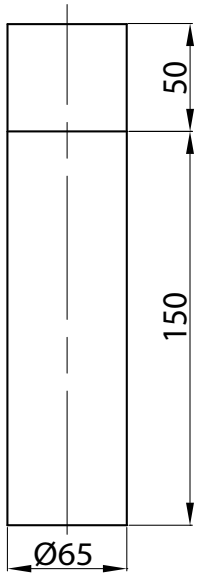

ALNOR® ventilation systems
is a registered trademark protected by a technical patent. All modification rights reserved.

Access doors & cleanouts

ALNOR reserves the right to modify technical specifications in line with the policy of continuous product improvement.

ALNOR® ventilation systems
is a registered trademark protected by a technical patent. All modification rights reserved.

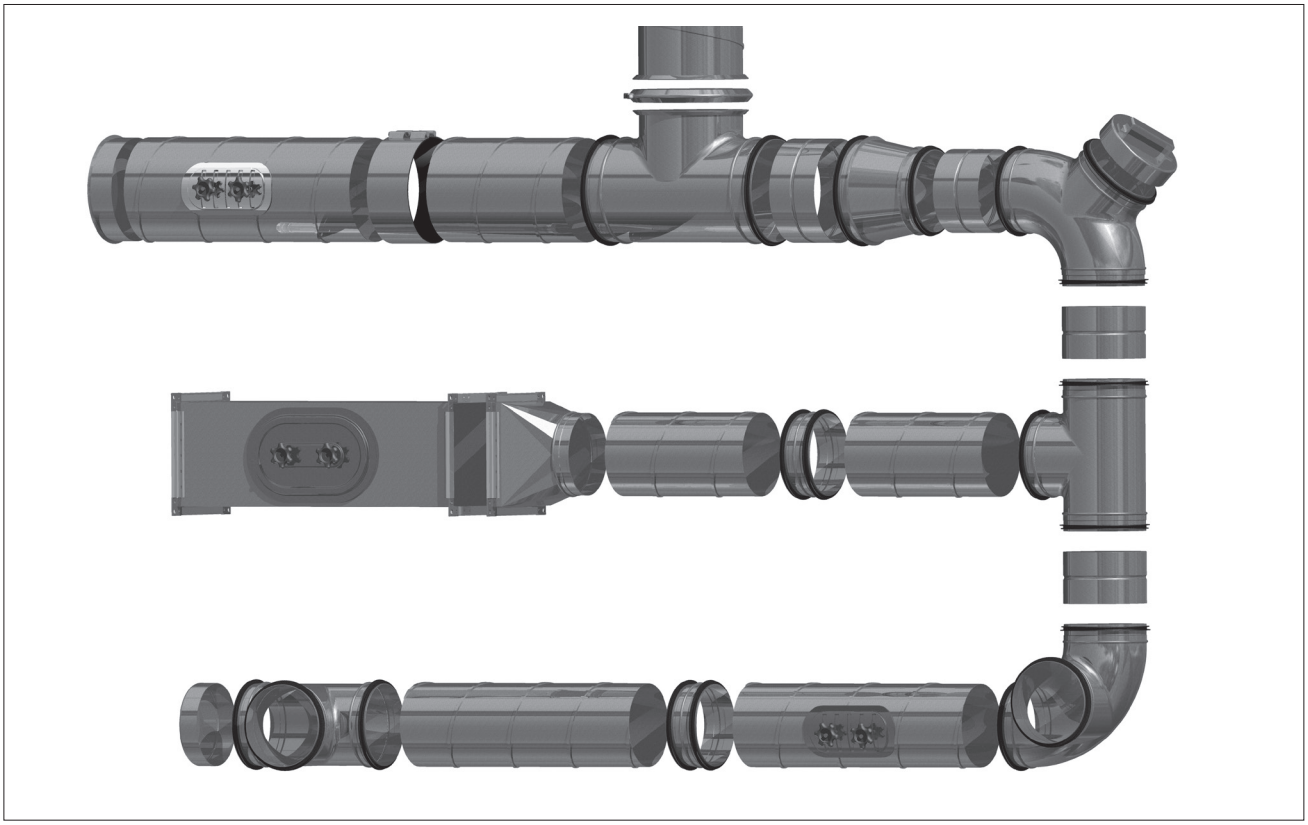

System description

A wide range of products such as access doors, cleanouts, hatches, covers and dampers for easy cleaning and maintenance access to the interior of ductwork. The ducts and fittings with complementary flanges and clamps form the TRANS®System – a complete ductwork solution with flanged connections and couplings.

Dimensions

All components of the TRANS®System are available in the diameter sizing of the standard round ductwork. The only difference is that the fittings for this system are manufactured with zero-tolerance rating to fit round ducts. Other sizes are shown in the tables and specifications in the individual Product Data Sheets.

Marking

ALNOR products carry the Polish conformity mark B for construction products and product codes as shown in the technical specifications listed in this catalogue.

Application advantages

The access doors and cleanouts provide an easy and trouble-free access to the ductwork for cleaning of the inner surfaces. The access doors can also be installed in finished ductwork installations without any need for rebuilding or compromising the required air flow standards.

Installation instructions

The access doors are installed in ports which need to be cut in the ductwork walls with the help of cutting templates. When the access door is fitted into the opening, only two lock knobs need to be tightened to seal and close the duct. All components of the TRANS®System are fastened with clamps tightened with screws to fasten the mated flanges.

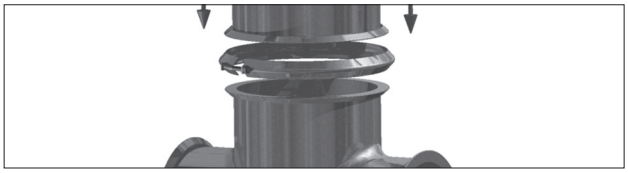

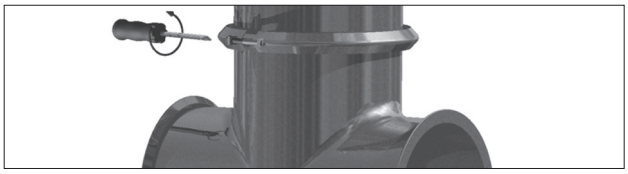

ALNOR® ventilation systems
is a registered trademark protected by a technical patent. All modification rights reserved.

Preinstalled access doors for round ducts

IPR-SNSL



Description

IPR-SNSL access door are preinstalled in the round duct coupling. Due to such combination mounting of access doors in diameters from 80 to 800 mm becomes ultra-quick. There is no need to cut-out the hole , place the doors and tighten the screws - it is all done during production. It's an ideal solution for fire damper inspection purposes.



The male coupling has laser cut edges ideally matched to the access door.

Available versions:
IPR-SNSL - male connections
IPR-SNSLF - male and female connections

Example identification
Product code: **IPR-SNSL - aaa**

type
Ød

Dimensions

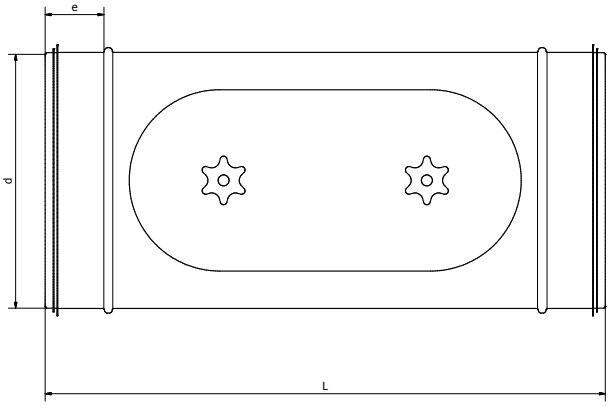

Ød [mm]	L [mm]	e [mm]
80	290	36
100	290	36
125	290	36
150	360	36
160	360	36
200	360	36
250	360	36
315	360	36
355	430	55
400	430	55
450	480	75
500	480	75
560	480	75
630	480	75
710	520	100
800	520	100



Access door can be install, for example, next to fire damper to enable the fire damper inspection without disassembly of the installation.

ALNOR® ventilation systems
is a registered trademark protected by a technical patent. All modification rights reserved.

Access door for round ducts
IPR

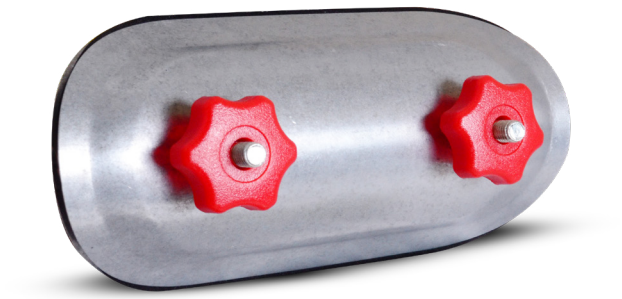

Description

The IPR access door features a CR EPDM gasket and it is designed for installation on round duct walls. The design of the IPR access door and its gasket profile provide a perfect seal around the duct opening. This ensures a high air tightness class.
The product provides a very simple, low-cost and extremely effective solution for closing and sealing access openings in the ductwork. The openings made in the ductwork for access doors must be sized to meet the requirements of EN 12097.
Another determinant of the access opening size is how the interior is cleaned. Some cleaning processes and tools require access doors as large as 800x400 mm. The access door is installed in the opening made using the cutting template supplied with the product. When the lock knobs are undone, the spacing between the outer and inner covers of the access door expands for the inner cover to enter the ductwork inner diameter. Once the access door has been adjusted to the opening, it is closed by tightening the lock knobs.
The access door gasket provides the highest air tightness class and the required gasket profile.

Available materials — Product code examples
IPR-...- galvanized steel sheet

Product code example
Product code: **IPR - aaa**

type
Ød

Dimensions

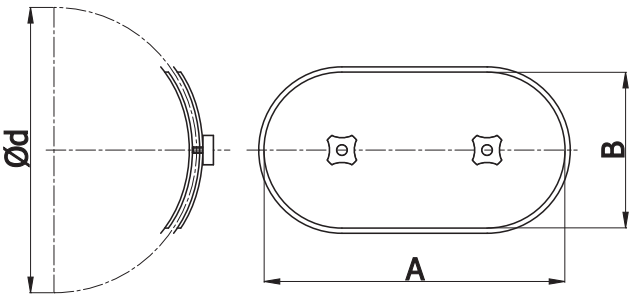

Ød nom (mm)	A (mm)	B (mm)	Weight (kg)	Diameter range
80	180	80	0.3	76-85
100	180	80	0.3	96-105
125	180	80	0.3	121-130
150	200	100	0.4	130-155
160	200	100	0.4	156-190
200	200	100	0.4	191-240
250	200	100	0.4	241-300
315	200	100	0.4	301-360
355	300	200	1.0	341-380
400	300	200	1.0	381-420
450	300	200	1.0	421-470
500	300	200	1.0	471-530
560	400	300	2.0	531-600
630	400	300	2.0	601-670
710	400	300	2.0	671-750
800	400	300	2.0	751-850

A and B are the dimensions of the opening to be made in the duct wall.

ALNOR® ventilation systems
is a registered trademark protected by a technical patent. All modification rights reserved.

Access door for round ducts
IPR

Technical specifications

Minimum dimensions of the access opening for round ducts in accordance with EN 12097.

Oval or square opening	
Nominal duct diameter (mm) D	Minimum opening dimensions in the duct wall (mm) AxB
100 ≤ D < 200	180x80
200 ≤ D < 315	200x100
315 ≤ D < 500	300x200
500 < D	500x300

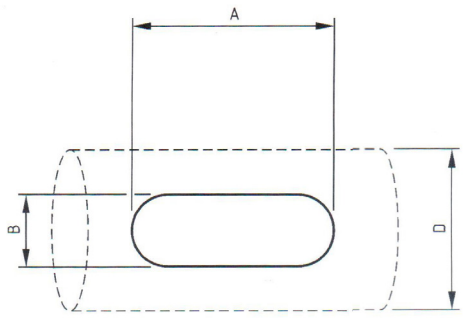

The CR EPDM cellular gasket is highly resistant to weathering and UV radiation, which allows installing the IPR access door in outdoor ducts.

Note!
Always observe the installation requirements, e.g. the access door must not be installed near water pooling surfaces.

Temperature range: -30 °C to +120 °C

Air tightness class

The access door gasket provides the highest air tightness class provided that fittings used are equipped with seals.

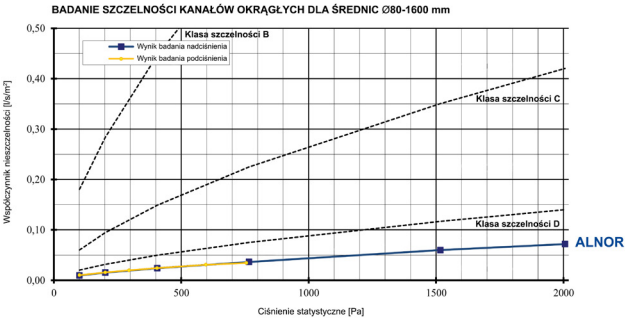

ALNOR® ventilation systems
is a registered trademark protected by a technical patent. All modification rights reserved.

METU access door for spiral ducts

IPR-RRD



Description

The IPR-RRD access doors of the METU System for round ducts are the most versatile access opening closures. They fit nearly all diameters of spiral ducts — from 68 to 1800 mm — and are made from various materials such as galvanized steel sheet and stainless steel. The access door sizes meet the requirements of EN 12097 and can be tailor-made according to individual specifications if access openings larger than those defined in industrial standards are required. The METU System covers a range of different gasket types and materials; as a result, the IPR-RRD access doors made from stainless steel sheet offer resistance up to 300˚C. Standard gaskets are made from PE.

Other types of available IPR-RDD access doors:
IPR-RRD-K - access door made from stainless steel sheet
IPR-RRD-A - access door made from aluminium sheet
IPR-RRD-I -access door for insulated ducts (when ordering, specify the insulation layer thickness – between 20 and 25 mm).
IPR-RRD-HT - access door with ceramic gasket with temperature resistance up to +300˚C

Available materials — Product code examples
IPR-.RRD-.. - galvanized steel sheet
IPR-.RRD-K-... - 1.4301/304 stainless steel sheet

Product code example
Product code: **IPR-RRD - aaa**
type
Ød

Dimensions

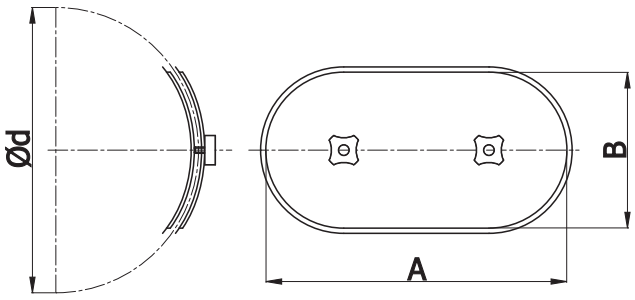

Ød nom (mm)	A (mm)	B (mm)	Weight (kg)	Diameter range
80	180	80	0.3	76-85
100	180	80	0.3	96-105
125	180	80	0.3	121-130
140	180	80	0.4	130-155
150	180	80	0.4	130-155
160	180	80	0.4	156-190
180	200	100	0.4	156-190
200	200	100	0.4	191-240
224	200	100	0.4	191-240
250	200	100	0.4	241-300
280	200	100	0.4	241-300
300	200	100	0.4	301-360
315	200	100	0.4	301-360
355	300	200	1.0	341-380
400	300	200	1.0	381-420
450	300	200	1.0	421-470
500	300	200	1.0	471-530
560	400	300	2.0	531-600
630	400	300	2.0	601-670
710	400	300	2.0	671-750
800	400	300	2.0	751-850
900	400	300	2.0	851-950
1000	500	400	4.2	951-1060
1120	500	400	4.2	1061-1180
1250	500	400	4.2	1181-1320
1400	500	400	7.1	1321-1500
1500	500	400	9.5	1421-1600
1600	500	400	11.2	1501-1800

A and B are the dimensions of the opening to be made in the duct wall.

ALNOR® ventilation systems
is a registered trademark protected by a technical patent. All modification rights reserved.

METU access door for spiral ducts

IPR-RRD

Size selection

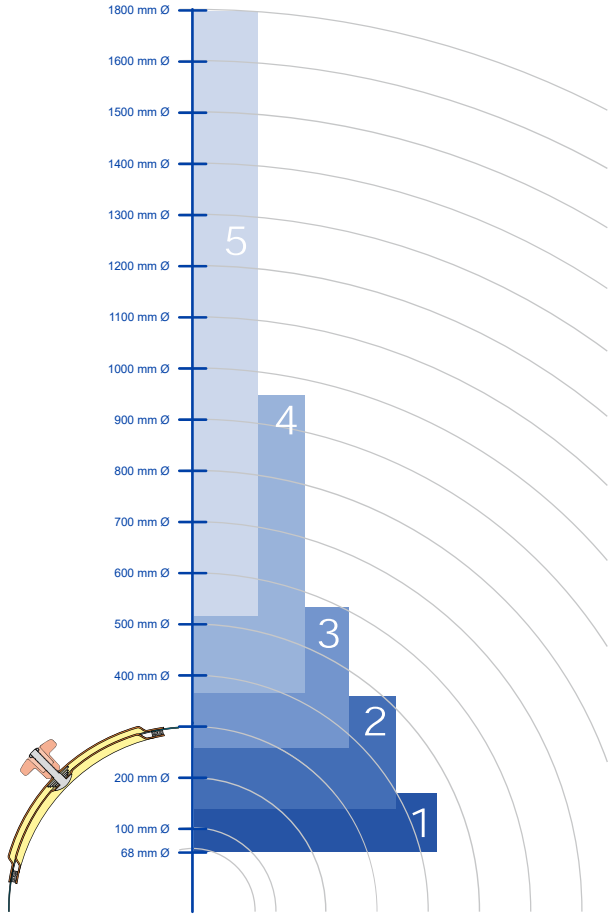

Types of insulated access doors

The IPR-RRD access doors of the METU System can be installed in round ventilation ducts clad in thermal insulation. Several versions of the IPR-RRD model are available, including access doors for insulated ducts and ducts with cladding. Standard gaskets are made from PE. Gaskets made from other materials are available on request (including self-adhesive rubber edge seals and heat-resistant ceramic seals).

Types of available IPR-RDD-I access doors:

IPR-RRD-I-3PL-… - universal access door for all thickness sizes of insulation + insulated double bottom cover

IPR-RRD-I-3DE-… - features an additional (third) top cover installed over the insulation layer double lock knob, zero cold bridge version

IPR-RRD-I-DW1-… - for ducts with cladding, insulation thickness from 1 to 50 mm + single lock knob

IPR-RRD-I-DW2-… - for ducts with cladding, double-cover version for thick insulation layers

IPR-RRD-I-3PL
Universal access door with an insulated double bottom cover for all thickness sizes of the insulation layer.

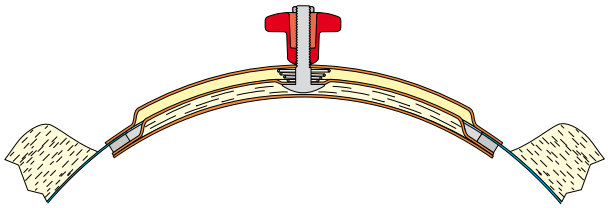

IPR-RRD-I-3DE
Access door with a double lock knob in the zero cold bridge version. Features an additional (third) top cover installed over the insulation layer.

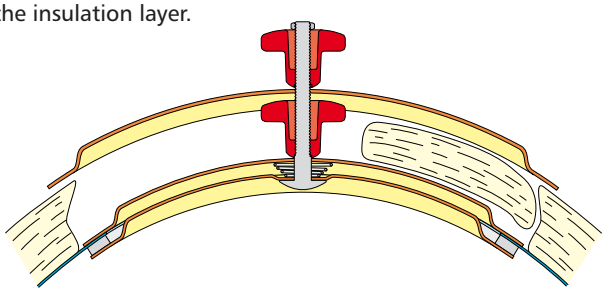

IPR-RRD-I-DW1
Access door with a single lock knob for ducts clad in 1 to 50 mm thick insulation.

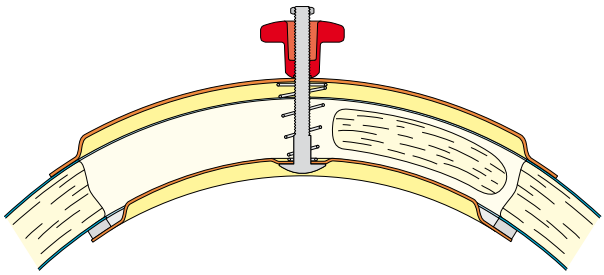

IPR-RRD-I-DW2
Double-cover access door for thick insulation layers and ducts with cladding

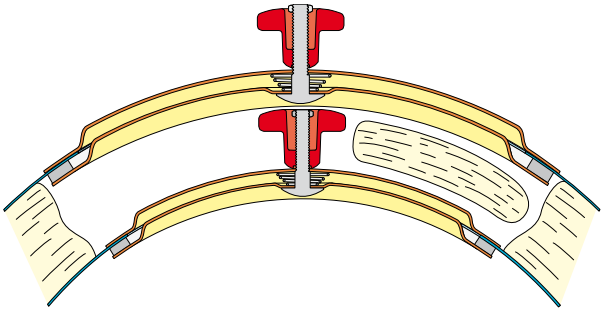

ALNOR® ventilation systems
is a registered trademark protected by a technical patent. All modification rights reserved.

IPFQ

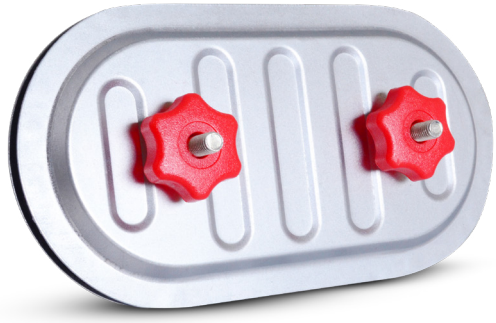

Description

The IPFQ access door is the simplest, tried and tested, and very convenient closure for access openings in square ducts. The design of the IPFQ access door and its gasket profile provide a perfect seal around the duct opening. The access door consists of two covers which clamp the edges of the opening via two lock knobs. When closed, the access door provides an air-tight seal. This solution provides air tightness class D.
A cutting template for the access openings is included.

Available materials — Product code examples
IPFQ-...- galvanized steel sheet

Product code example
Product code: **IPFQ - aaa**

type
AxB

Dimensions

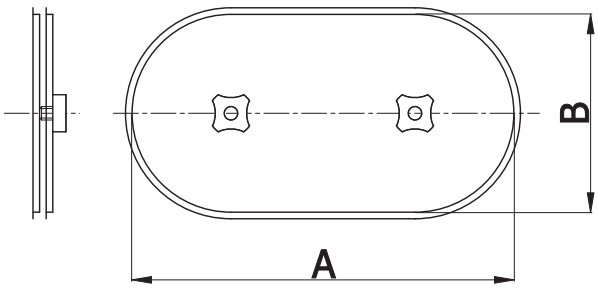

Product code	*A (mm)*	*B (mm)*
IPFQ-180-80	180	80
IPFQ-200-100	200	100
IPFQ-300-150	300	150
IPFQ-300-200	300	200
IPFQ-400-200	400	200
IPFQ-400-300	400	300
IPFQ-500-300	500	300
IPFQ-500-400	500	400
IPFQ-600-400	600	400
IPFQ-600-450	600	450
IPFQ-700-500	700	500

A and B are the dimensions of the opening to be made in the duct wall.

ALNOR® ventilation systems
is a registered trademark protected by a technical patent. All modification rights reserved.

Access door for square ducts

IPFQ

Technical specifications

Minimum dimensions of the access opening for square duct sizes in accordance with EN 12097.

Oval or square opening	
Diameter/size S of the duct side with the access door installed	Minimum opening dimensions in the duct wall (mm) AxB
S ≤ 200	300x100
200 < S ≤ 500	400x200
500 < S	500x400

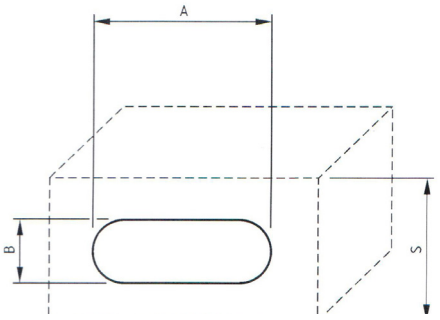

The CR EPDM cellular gasket is highly resistant to weathering and UV radiation, which allows installing the IPFQ access door in outdoor ducts.

Temperature range: -30 °C to +150 °C

Air tightness class

The access door gasket provides the highest air tightness class (D) provided that fittings used are equipped with seals.

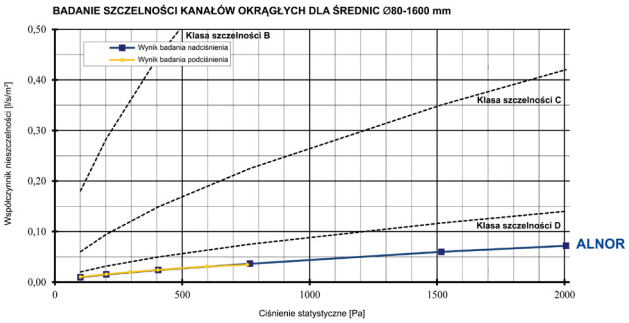

ALNOR® ventilation systems
is a registered trademark protected by a technical patent. All modification rights reserved.

IPFQ-RD



Description

The IPFQ-RD access doors of the METU System for square ducts are available in the widest possible range of sizes. The access doors meet the requirements of EN 12097 and they can be customized to individual design specifications and ductwork sizes. They are available in galvanized steel sheet, stainless steel sheet and aluminium sheet, including a range of lock knobs made from various materials. A selection of gaskets is also available. The standard IPFQ-RD access doors are supplied with PE gaskets.

Other types of available IPFQ-RD access doors

IPFQ-RD-K - access door made from stainless steel sheet
IPFQ-RD-A - access door made from aluminium sheet
IPFQ-RD-I - access door for insulated ducts (when ordering, specify the insulation layer thickness – between 20 and 25 mm).
IPFQ-RD-HT - access door with ceramic gasket with temperature resistance up to +200˚C.
IPFQ-RD-K-HT - access door with ceramic gasket with temperature resistance up to +300˚C.
IPFQ-LX - access door with special clasp locks

Available materials - Product code examples

IPFQ-RD-... - galvanized steel sheet
IPFQ-RD-K-... - 1.4301/304 stainless steel sheet

Product code example

Product code: **IPFQ-RD - aaa**

type
AxB

Dimensions

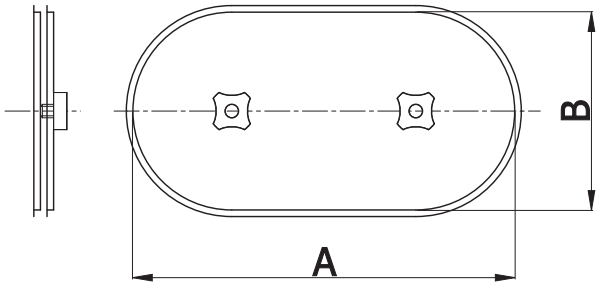

Product code	A (mm)	B (mm)
IPFQ-RD-180-80	180	80
IPFQ-RD-200-100	200	100
IPFQ-RD-300-150	300	150
IPFQ-RD-300-200	300	200
IPFQ-RD-400-200	400	200
IPFQ-RD-400-300	400	300
IPFQ-RD-500-300	500	300
IPFQ-RD-500-400	500	400
IPFQ-RD-600-400	600	400
IPFQ-RD-600-500	600	500
IPFQ-RD-700-500	700	500

A and B are the dimensions of the opening to be made in the duct wall.

ALNOR® ventilation systems
is a registered trademark protected by a technical patent. All modification rights reserved.

Access door for insulated square ducts

IPFQ-RD

Types of insulated access doors

The IPFQ-RD access doors of the METU System are designed for installation in square ducts with thermal insulation of various thickness and with or without cladding. The additional cover conceals the trimmed edges of the opening in the insulation layer to protect against fraying and to provide an aesthetic finish of the closure. The profile of the rubber gasket helps fay the access door to the duct without cold bridging. The air gap between the access door covers provides a sufficient insulation barrier.

W ofercie dostępne są następujące typey klap IPFQ-RD

IPFQ-RD-I-… - universal access door with additional cover and air insulation gap; thickness of ductwork insulation 20-55 mm

IPFQ-RD-I-3PL-… - access door for insulation thickness > 55 mm, insulated double bottom cover and PE gasket

IPFQ -RD-I-3DE-… - features an additional (third) top cover installed over the insulation layer and double lock knob, zero cold bridge version, min. insulation thickness 42 mm, PE gasket

IPFQ -RD-I-DW1-… - or ducts with cladding, insulation thickness from 10 to 50 mm, single lock knob

IPFQ -RD-I-DW2-… - for ducts with cladding, double-cover version for thick insulation layers

Available materials — Product code examples

IPFQ-RD-... - galvanized steel sheet

IPFQ-RD-K-... - 1.4301/304 stainless steel sheet

IPR-RRD-I-3PL
Insulated bottom cover

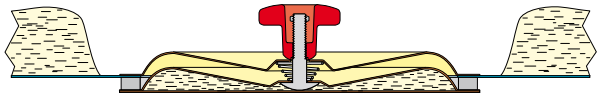

IPR-RRD-I-3DE
Additional (third) cover. Minimum insulation thickness required due to the lock knob height: 42 to 80 mm..

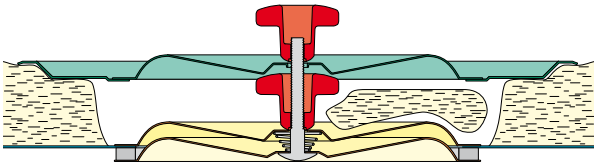

IPR-RRD-I-DW1
Double-cover access door for ducts with outer cladding.
Maximum thickness of the insulation layer: 20 to 60 mm.

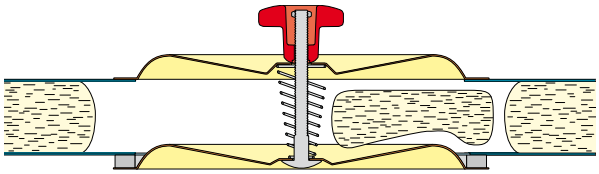

IPR-RRD-I-DW2
Double access door for thick ductwork insulation systems with outer cladding.
Maximum thickness of the insulation layer: 42 to 80 mm.

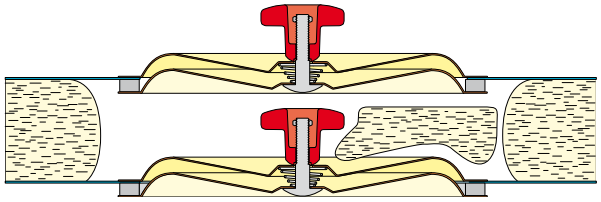

ALNOR® ventilation systems
is a registered trademark protected by a technical patent. All modification rights reserved.

Insulated and hinged access door for square duct
IPFD



Description

The IPFD access door enables maintenance and cleaning of square ducts. The access door is made from galvanized steel sheet. The frame in contact with the duct wall has a rubber mat seal. The access door features a 25 mm thick thermal insulation layer made from glass wool. Four clasp locks allow easy opening and closing of the access door.

If properly installed and closed, the access door provides airtightness class C.

Available materials — Product code examples
IPFD-..- galvanized steel sheet

Product code example
Product code: **IPFD - aaa**

type
AxB

Dimensions

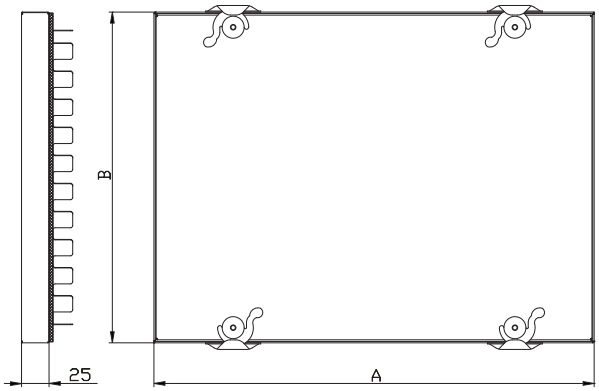

Product code	*A (mm)*	*B (mm)*	*Number of clasp locks*
IPFD-100-100	100	100	2
IPFD-150-100	150	100	2
IPFD-150-150	150	150	2
IPFD-200-100	200	100	2
IPFD-200-125	200	125	2
IPFD-200-200	200	200	2
IPFD-250-250	250	250	4
IPFD-300-150	300	150	4
IPFD-300-200	300	200	4
IPFD-300-300	300	300	4
IPFD-350-350	350	350	4
IPFD-400-200	400	200	4
IPFD-400-300	400	300	4
IPFD-400-400	400	400	4
IPFD-450-300	450	300	4
IPFD-450-450	450	450	8
IPFD-500-500	500	500	8
IPFD-600-300	600	300	8
IPFD-600-400	600	400	8
IPFD-600-450	600	450	8
IPFD-600-600	600	600	8

ALNOR® ventilation systems
is a registered trademark protected by a technical patent. All modification rights reserved.

Quick-coupling flanges for SPIRAL ducts

FLT



Description

The quick-coupling flanges for spiral ducts and seam-welded dust extraction ductwork are installed directly at the bare ends of ducts or fittings. All quick-coupling flanges are installed by sliding them over the duct or fitting at the side with tab fasteners toward the duct / fitting end. They can also be fastened with self-drilling screws or rivets. The ducts and fittings tipped with quick-coupling flanges are a great choice for ductwork joints which require fast disassembly and reassembly. This solution is widely popular in woodworking and sawdust or EPS debris collectors. The quick-coupling flanges are also recommended for large-size ducts and fittings (diameter of 630 mm or greater) with joints at high levels for a quick and easy joining process. A ductwork system built with the FLT quick-coupling flanges meets air tightness class C according to Eurovent's requirements

Available materials — Product code examples
FLT-... - galvanized steel sheet
FLT-K-... - 1.4301/304 stainless steel

Product code example
Product code: **FLT - aaa**

type
Ød

Dimensions

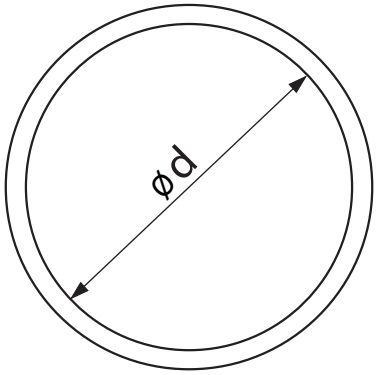

Ød 80-180 Ød200-1600

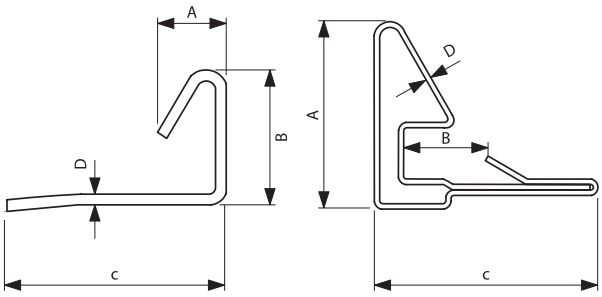

Diameter Ød	*A (mm)*	*B (mm)*	*C (mm)*	*D (mm)*
80-180	5.0	9.8	16	0.8
200-499	16.4	9.0	24	0.6
500-999	26.5	12.1	32	0.75
1000-1600	37.1	18.3	46	1.0

ALNOR® ventilation systems
is a registered trademark protected by a technical patent. All modification rights reserved.

Dust extraction and ventilation ductwork clamp

FLKT



Description

The clamps for quick-coupling ventilation ductwork components are intended for securing the FLT quick-coupling flanges in ductwork systems made from galvanized or stainless steel. The clamp binds two quick-coupling flanges together by tightening the clamp's screw, similarly to a hose clip. The cross-sectional profile of the quick-coupling flanges is wedge-shaped; when the band over them is tightened, the opposing flanges are brought to a very tight fit, providing a maximum seal of the ductwork joint. The FLKT-L band with a PU foam sleeve helps provide even more effective sealing of the ductwork joint.

Available materials — Product code examples
FLKT-... - galvanized steel sheet
FLKT-K-... - 1.4301/304 stainless steel sheet

Product code example
Product code: **FLKT - aaa**

type
Ød

Dimensions

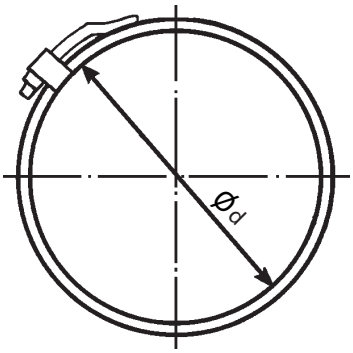

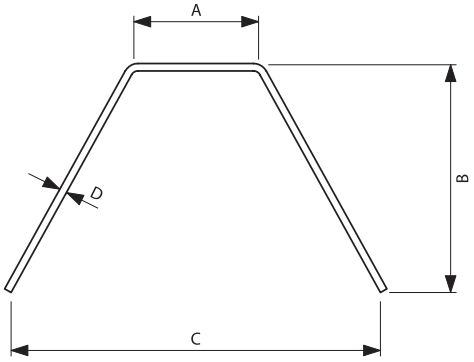

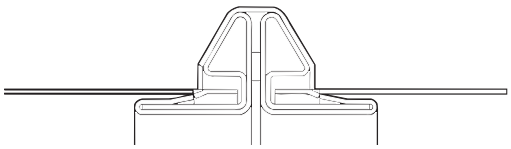

Diameter Ød	A (mm)	B (mm)	C (mm)	D (mm)
80-180	4.9	6.3	10.4	0.8
200-499	5.9	9.3	14.9	0.8
500-999	8.4	15.0	23.4	1.0
1000-1600	12.1	22.6	34.8	1.5

ALNOR® ventilation systems
is a registered trademark protected by a technical patent. All modification rights reserved.

Duct end access cap

CPFH

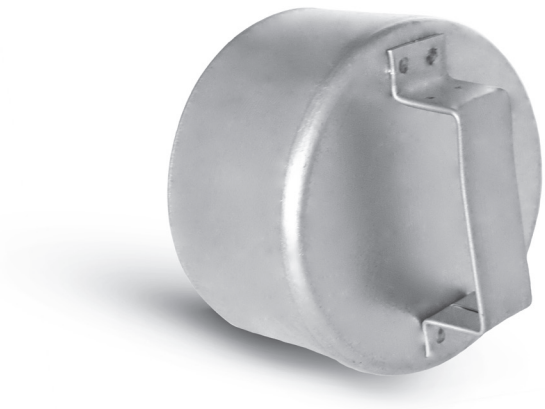

Description

The CPFH access caps are used to blind off round access ends of the TPCL T-pieces, the BPBKCL cleanout bends, and other ventilation fittings. The caps feature either one or two handles (according to the diameter) to facilitate frequent opening and closing. A female access cap requires a duct fitting end to be installed.

Available materials - Product code examples

CPFH-...	- galvanized steel sheet
CPFH-K-...	- 1.4301/304 stainless steel sheet
CPFH-K-...-316L	- 1.4404/316L stainless steel sheet
CPFH-A-...	- aluminium sheet
CPFH-CU-...	- copper sheet

Product code example

Product code: **CPFH - aaa**

type

Ød

Dimensions

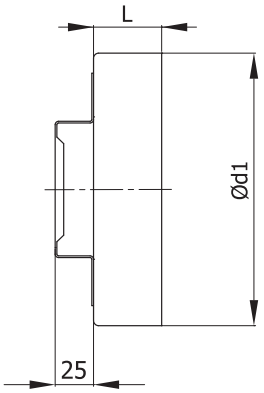

Ød$_{1\ nom}$ (mm)	L (mm)	Weight (kg)
80*	40	0.1
100*	40	0.1
125*	40	0.1
140*	40	0.1
150*	40	0.2
160*	40	0.2
180*	40	0.2
200*	40	0.3
224*	40	0.3
250**	60	0.5
280**	60	0.5
300**	60	0.5
315**	60	0.7
355**	60	0.7
400**	80	1.2
450**	80	1.7
500**	80	2.2
560**	80	2.3
600**	80	2.6
630**	80	2.8

* 1 handle

** 2 handles

Ø355 to 1600 sizes are segmented and welded.

ALNOR® ventilation systems

is a registered trademark protected by a technical patent. All modification rights reserved.

Access blind plug for SPIRAL ducts
CSHL



Description

The CSHL access blind plugs are available in galvanized steel, stainless steel or aluminium as access closures installed at the ends of spiral ducts or type B1 welded ducts. EPDM gaskets provide air tightness class D, which helps reduce air pressure losses in the ventilation system and allows using lower-performance and more budget-friendly fans and AHUs. One or two handles are provided (according to the diameter) to facilitate frequent removal and plugging.

Available materials — Product code examples

CSHL-... - galvanized steel sheet
CSHL-K-... - 1.4301 / 304 stainless steel sheet
CSHL-K-...-316L - 1.4404 / 316L stainless steel sheet
CSHL-A-... - aluminium sheet
CSHL-CU-... - copper sheet

Product code example

Product code: **CSHL - aaa**

type
Ød

Dimensions

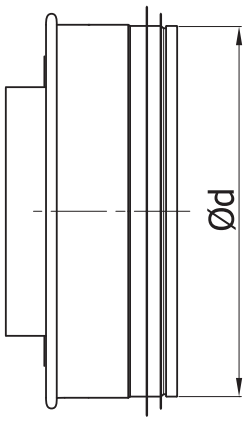

Ød [mm]	Weight (kg)
80*	0.10
100*	0.10
125*	0.10
140	0.10
150	0.20
160	0.20
180	0.30
200	0.30
224	0.30
250	0.60
280	0.60
300	0.70
315	0.90
355	1.20
400	1.20
450	1.80
500	1.70
560	2.20
600	2.60
630	2.80
710	4.50
800	5.40
900	6.60
1000	7.90
1120	10.10
1250	12.20
1400	22.00
1500	25.70
1600	28.80

* pressed

ALNOR® ventilation systems
is a registered trademark protected by a technical patent. All modification rights reserved.

Segmented end cap with handle for round ducts

CSH



Description

The CSH segmented end caps are designed for blinding the ends of round ventilation ducts which need to be accessed at frequent intervals. To facilitate this, end caps are provided with one or two handles (according to the diameter).

Available materials — Product code examples

CSH-...	- galvanized steel sheet
CSH-K-...	- 1.4301/304 stainless steel sheet
CSH-K-...-316L	- 1.4404/316L stainless steel sheet
CSH-A-...	- aluminium sheet
CSH-CU-...	- copper sheet

Product code example

Product code: **CSH - aaa**

type

Ød

Dimensions

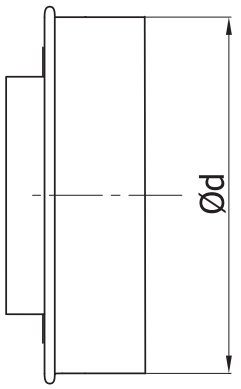

Ød (mm)	Weight (kg)
80*	0.10
100*	0.10
125*	0.10
140	0.10
150	0.20
160	0.20
180	0.30
200	0.30
224	0.30
250	0.60
280	0.60
300	0.70
315	0.90
355	1.20
400	1.20
450	1.80
500	1.70
560	2.20
600	2.60
630	2.80
710	4.50
800	5.40
900	6.60
1000	7.90
1120	10.10
1250	12.20
1400	22.00
1500	25.70
1600	28.80

* pressed

ALNOR® ventilation systems
is a registered trademark protected by a technical patent. All modification rights reserved.

Cleanout bend

BPKCL-90/BPKC-90



Description

Cleanout bends enable easy cleaning of ventilation systems composed of fittings and spiral coiled ducts. They help reduce the number of access doors and cleanouts to be installed – a cleanout bend provides access to both ductwork legs at the same time. This product is available in male connection sizes, and should be closed using an access cap with handle, e.g. the CPFH cap. The solution also ensures less pressure loss compared to traditional T-pieces.

Available materials — Product code examples
BPKCL-...-...- galvanized steel sheet

Product code example
Product code: **BPKCL - aaa - bbb**

type
Ød$_1$
Ød$_3$

Dimensions

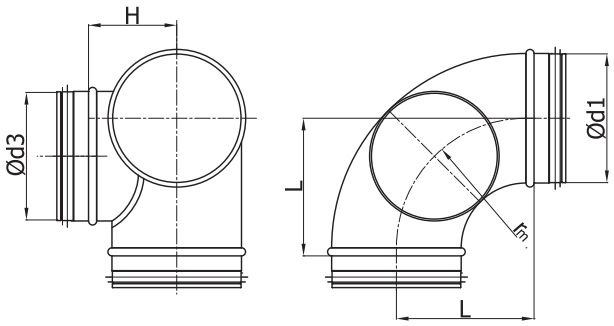

$r_m \approx 1 \times d_1$

Ød$_{1\ nom}$ (mm)	Ød$_{3\ nom}$ (mm)	L (mm)	H (mm)	Weight (kg)
100	100	100	78	0.4
125	100	125	78	0.6
125	125	125	90	0.7
150	125	150	90	0.9
160	125	160	90	1.0
160	160	160	108	1.0
180	160	180	108	1.2
200	160	200	108	1.4
200	200	200	128	1.4
250	200	250	128	2.2
250	250	250	148	2.3
315	250	315	148	3.3
315	315	315	180	3.3

Technical specifications

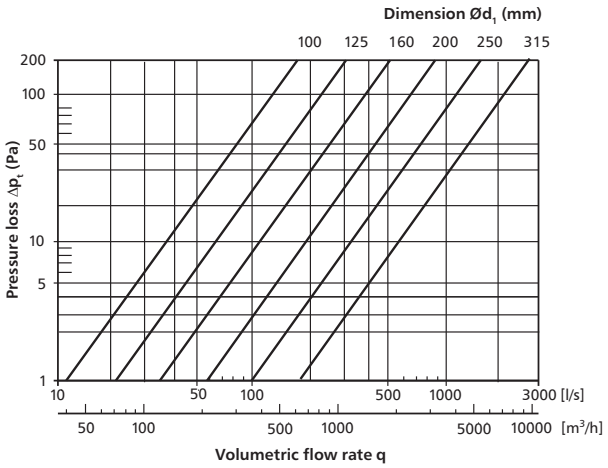

ALNOR® ventilation systems
is a registered trademark protected by a technical patent. All modification rights reserved.

Cleanout bend for round ducts

BPBKCL-90/BPBKC-90



Description

Cleanout bends enable quick and easy cleaning of ductwork. An access door is made exactly at the top of the bend to help access both legs of the ductwork. The cleanout bend is sealed off with the CPFH female-sized access cap featuring a convenient handle or handles (according to the diameter).

BPBKCL – cleanout bend with 3 EPDM gaskets, air tightness class D
BPBKC – cleanout bend w/o gaskets

Available materials — Product code examples
BPBKCL-...-...-90- galvanized steel sheet

Product code example
Product code: **BPKCL - aaa - bbb - 90°**

type
$Ød_1$
$Ød_3$
kąt

Technical specifications

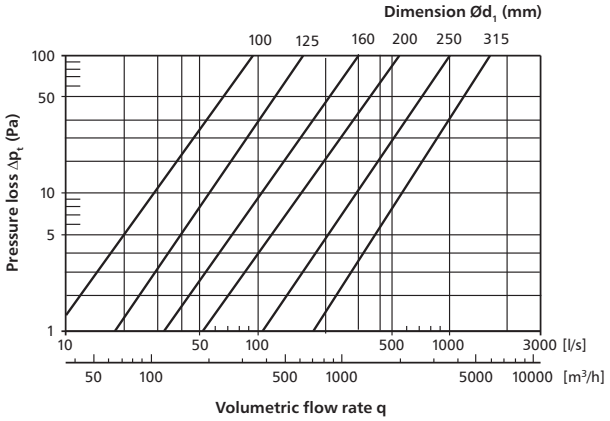

Dimensions

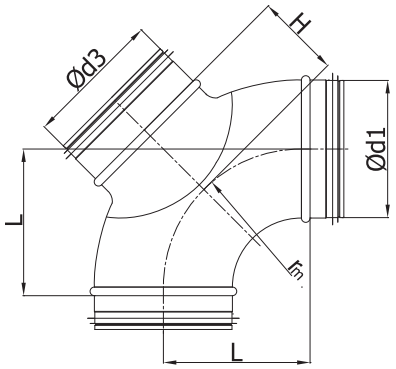

$r_m \approx 1 \times d_1$

$Ød_{1\ nom}$ (mm)	$Ød_{3\ nom}$ (mm)	L (mm)	H (mm)	Weight (kg)
100	100	100	78	0.4
125	100	125	78	0.6
125	125	125	90	0.6
150	125	150	90	0.8
160	125	160	90	0.8
160	160	160	108	0.8
180	160	175	108	1.1
200	160	200	108	1.4
200	200	200	128	1.4
250	200	250	128	2.3
250	250	250	148	2.3
315	250	315	148	3.5
315	315	315	180	3.5

The sizing table applies to the BPBKCL cleanout bends provided with the CPFH access caps, the main duct and the branch of the same (size ($Ød_1 = Ød_3$).

With the CPFH access cap and the branch with diameter reduced by one size ($Ød_3 < Ød_1$), the pressure loss is ca. 30%.

ALNOR® ventilation systems
is a registered trademark protected by a technical patent. All modification rights reserved.

Download Wentyle
Download AlnorCAM
Order via B2B platform

Roof installations

ALNOR reserves the right to modify technical specifications in line with the policy of continuous product improvement.

ALNOR® ventilation systems
is a registered trademark protected by a technical patent. All modification rights reserved.

System description

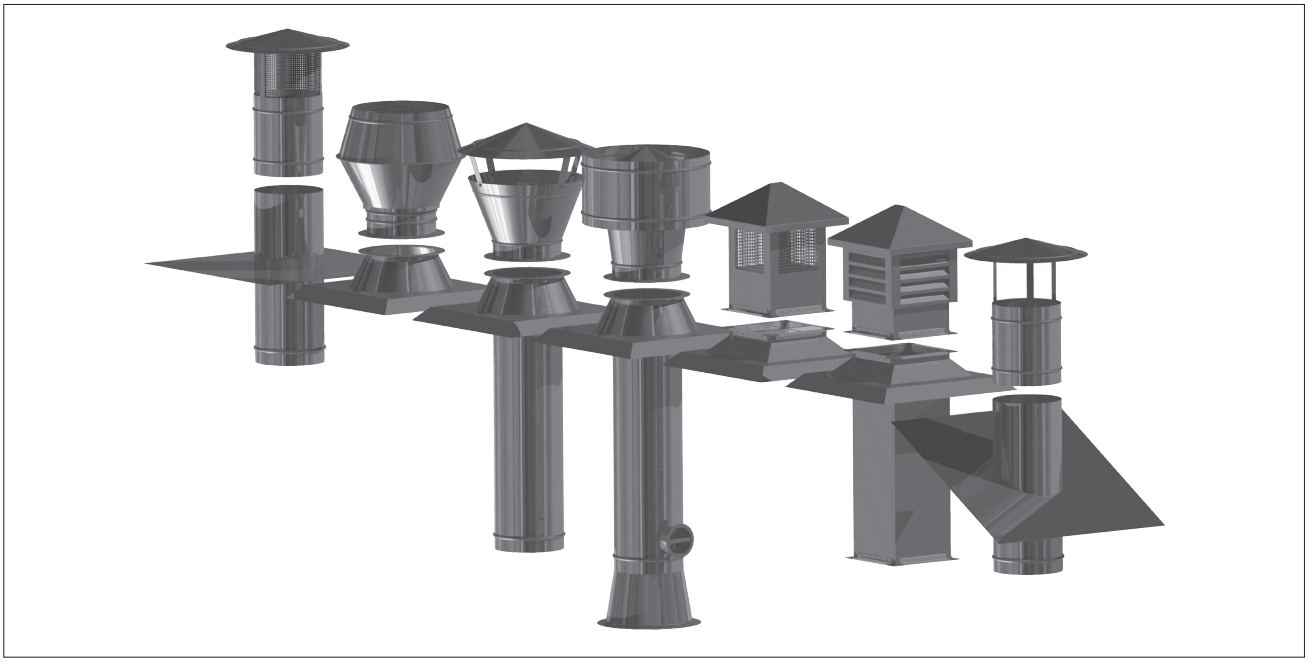

System description

Roof installations such as air intake units, roof exhaust vents and roof bases, combined with ducts and fittings, provide a complete ventilation system. The wide range of various types and versions allow adapting roof ventilators to virtually any design requirements.

Dimensions

All round roof installations are available with diameters matching those of SPIRAL®system round fittings and steel flanges. Square roof installations need to be adjusted to the dimensions of the existing ductwork and fittings.

Marking

ALNOR products carry the Polish conformity mark B for construction products and product codes as shown in the technical specifications listed in this catalogue.

Application advantages

Roof installations enable air intake and exhaust to and through the building roof, while providing a water-, heat- and air-tight seal at the roof penetration. The aesthetic finish and the available sizes help achieve a perfect match for a specific ductwork design, required air flow ratings, and the final appearance of the roof.

Installation instructions

Roof ventilators are fastened to the roof bases with screws for joining the mating steel flanges. The roof bases are fastened to roof ventilator units in the same way as when they are fastened to standard air intake units or roof exhaust vents. Depending on the bottom part, the roof base is fastened to the connected ductwork with self-drilling screws or flanges with steel screws.

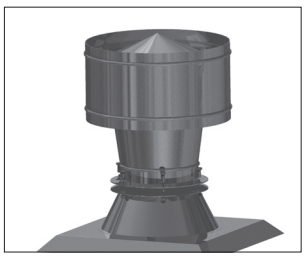

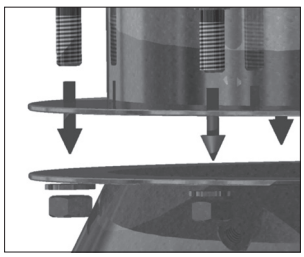

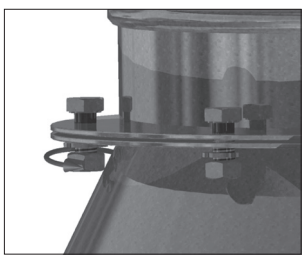

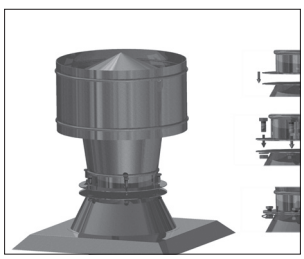

ALNOR® ventilation systems
is a legally protected trademark and technical patent. All rights reserved.

Roof base for round ductwork systems

PD-B1



Description

The type B1 lightweight roof bases are suitable for round ductwork systems. The standard version is made from galvanized steel sheet and designed for flat roofs. The top part of the roof base comes with a FLS steel flange in the standard version. The roof base is available on request with a male connector or a connector provided with an EPDM rubber gasket. Other versions available on request include roof bases designed for sloping roofs or made from stainless steel sheet or aluminium sheet. The roof base is a perfect match for roof intakes, roof exhaust vents, and roof ventilators (fans).

Available materials — Product code examples
PD-B1-...-... - galvanized steel sheet
PD-B1-K-...-... - 1.4301/304 stainless steel sheet
PD-B1-A-...-... - aluminium sheet

Product code example
Product code: **PD-B1 - aaa - bbb**

type
Ød
installation*

* GALA - EPDM gasket
* NS - male connection w/o gaskets

Dimensions

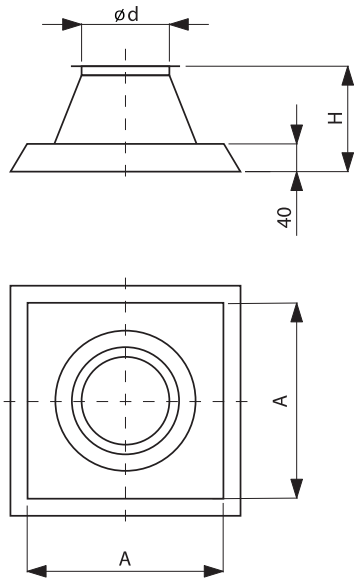

Ød$_{nom}$ [mm]	A [mm]	H [mm]	Weight [kg]
100	280	180	2.10
125	300	180	2.22
140	360	180	2.79
150	380	180	2.78
160	400	180	2.90
200	440	180	3.32
250	470	200	4.10
300	510	200	4.68
315	530	200	4.93
355	610	200	5.72
400	630	200	6.06
450	720	200	6.97
500	740	200	7.31
560	800	240	9.36
630	900	240	10.80
710	1020	240	12.83
800	1100	280	14.76
1000	1270	280	18.29

ALNOR® ventilation systems
is a legally protected trademark and technical patent. All rights reserved.

Roof base with duct for spiral ductwork systems

PD-B2



Description

The type B2 roof bases are designed for flat roofs. Versions available on request can be installed on roof slopes up to 30 degrees. The top part of the product has a FLS steel flange for installation of a roof air intake, a roof exhaust vent, a silencer, or a roof ventilator (fan). The steel flange provides a sturdy joint which can easily withstand vibration generated by fan units. Versions available on request can also have a male connection which can be provided with an EPDM gasket for female-connection air intake units / exhaust vents in ventilation systems not exposed to high vibration levels or strong gusts of wind. The bottom of the roof base is designed for direct fastening to spiral ducts, female connectors and fittings. The product can be made from stainless steel or aluminium sheet on request (aluminium roof bases are available with a male connection only).

Available materials — Product code examples

PD-B2-...-... - galvanized steel sheet
PD-B2-K-...-... - 1.4301/304 stainless steel sheet
PD-B2-A-...-... - aluminium sheet

Product code example

Product code: **PD-B2 - aaa - bbb**

type
Ød
installation*

* GALA - EPDM gasket
* NS - male connection w/o gaskets

Dimensions

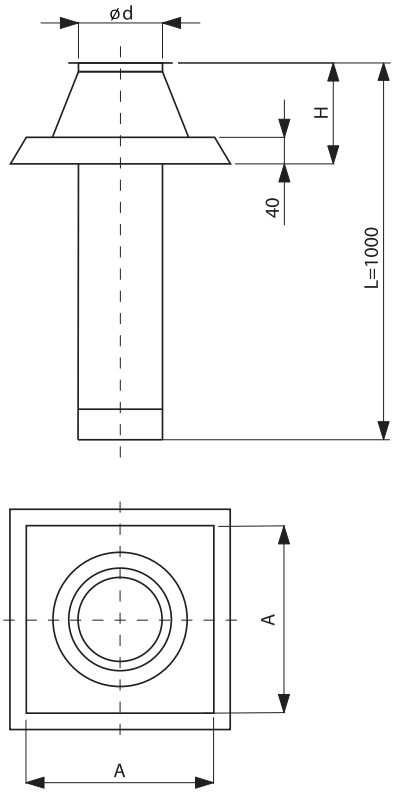

$Ød_{nom}$ [mm]	A [mm]	H [mm]	Weight [kg]
100	280	180	3.38
125	300	180	3.81
140	360	180	4.56
150	380	180	4.67
160	400	180	4.92
200	440	180	5.83
250	470	200	7.14
300	510	200	8.43
315	530	200	8.86
355	610	200	11.03
400	630	200	12.04
450	720	200	15.37
500	740	200	16.64
560	800	240	19.80
630	900	240	22.54
710	1020	240	28.70
800	1100	280	32.63
1000	1270	280	40.72

ALNOR® ventilation systems
is a legally protected trademark and technical patent. All rights reserved.

PD-B2 roof base drip tray

PD-DRIP-T



Dimensions

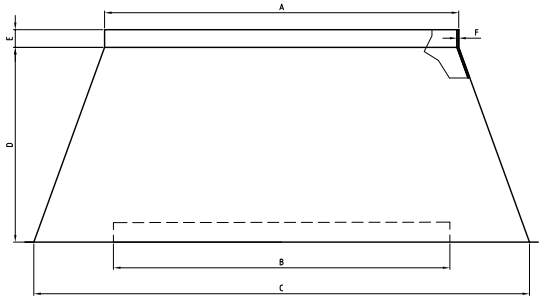

Product code	A [mm]	B [mm]	C [mm]	D [mm]	E [mm]	F [mm]
PD-DRIP-T-125	125	110	200	120	10	0.7
PD-DRIP-T-160	160	150	240	120	10	0.7
PD-DRIP-T-180	180	170	260	120	10	0.7
PD-DRIP-T-200	200	190	280	120	10	0.7
PD-DRIP-T-224	224	210	300	120	10	0.7

Description

PD-DRIP-T drip trays drain condensed water away from a roof base. Water (or condensate) flows down the inner walls of the roof base duct to the bottom of the drip tray, from which it slowly evaporates. All surfaces in contact with the pooling water are thoroughly protected against corrosion.



The centre of the drip tray has a wire mesh to stop large debris. The wire mesh allows free air circulation. The top-end diameter has a female connection size for mounting the roof base duct. This product is recommended for PD-B2 roof bases. PD-DRIP-T-200 drip trays are suitable for PD-B2-200 roof bases.

Available materials — Product code examples
PD-DRIP-T-... - galvanized steel sheet

Product code example
Product code: **PD-DRIP-T - aaa**

type
Ød

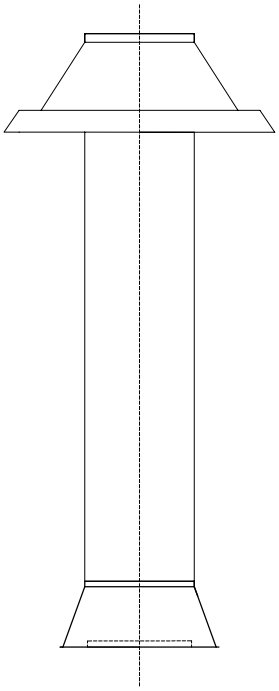

ALNOR® ventilation systems
is a legally protected trademark and technical patent. All rights reserved.

Roof base with damper

PD-B3



Description

The type B3 roof bases are made from galvanized sheet in the standard version and designed for installation on flat roofs. The top and bottom parts are provided with FLS steel flanges by default. The roof base can be ordered with an EPDM gasket at one or both ends. Other versions available on request include roof bases designed for sloping roofs and made from stainless steel sheet or aluminium sheet. The standard version of this roof base comes with a DAS shutoff damper; a DAT damper (air tightness class 4) can be used on request. The roof base can be installed as a standalone ventilation unit, e.g. in production buildings. The bottom part of the roof base can work as a roof air intake or a roof exhaust vent; if a roof fan or an air intake / exhaust is mounted to the FLS steel flange of the roof base, the assembly can work as a typical roof vent. An Alnor, Belimo or Siemens actuator can be added to the roof base's damper for remote control of the unit.

Available materials — Product code examples
PD-B3-...-...- galvanized steel sheet

Product code example
Product code: **PD-B3 - aaa - bbb**

type
Ød
installation*

* GALA - EPDM gasket
* NS - male connection w/o gaskets

Dimensions

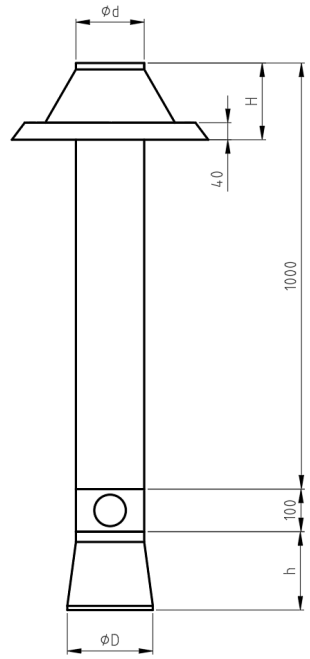

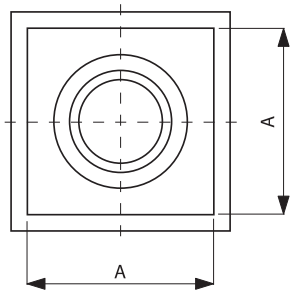

Ød [mm]	ØD [mm]	A [mm]	H [mm]	h [mm]	Weight [kg]
100	125	280	180	145	2.8
125	160	300	180	145	3.3
140	160	360	180	145	3.8
150	200	380	180	195	4.3
160	200	400	180	195	4.5
200	250	440	180	195	5.5
250	315	470	200	245	7.1
300	355	510	200	245	8.3
315	355	530	200	245	8.7
355	400	610	200	245	10.1
400	450	630	200	245	11.1
450	500	720	200	245	12.9
500	560	740	200	295	14.4
560	630	800	240	295	19.6
630	710	900	240	345	23.1
710	800	1020	240	395	29.7
800	1000	1100	280	495	36.6

ALNOR® ventilation systems
is a legally protected trademark and technical patent. All rights reserved.

Sloping roof base

TAGF



Description

TAGF roof bases are designed for installation of roof air intakes or exhaust vents without using steel flanges. Both ends of the roof base are male connections and match fittings and roof air intakes / exhausts provided with female connections. When ordering, specify the roof base inclination angle suitable for your roof slope. A roof base is a two-piece product composed of a shifting inner duct for adjusting the height over the roof. Once installed, the joints should be sealed, e.g. with TALT tape. The product is also available, on special request, with female connections or made from aluminium or stainless steel sheet

Available materials - Product code examples

TAGF-...-... - galvanized steel sheet
TAGF-K-...-... - 1.4301/304 stainless steel sheet
TAGF-K-...-...-316L - 1.4404/316L stainless steel sheet
TAGF-A-...-... - AW-1050A H24 aluminium sheet
TAGF-CU-...-... - M1E z4 copper sheet

Product code example

Product code: **TAGF - aaa - bbb**

type
Ød
μ

Dimensions

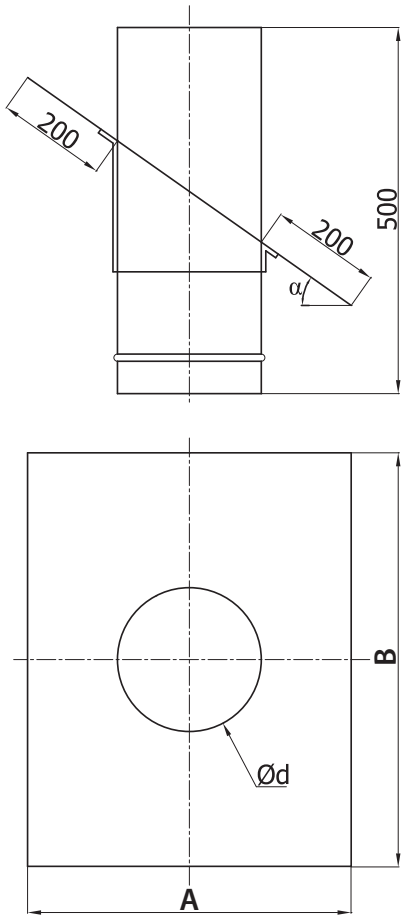

Product code	Ød nom [mm]	A [mm]	B [mm]
TAGF-100	100	500	500
TAGF-125	125	525	525
TAGF-150	150	550	550
TAGF-160	160	560	560
TAGF-180	180	580	580
TAGF-200	200	600	600
TAGF-224	224	624	624
TAGF-250	250	625	625
TAGF-315	315	715	715
TAGF-355	355	755	755
TAGF-400	400	800	800
TAGF-450	450	850	850
TAGF-500	500	900	900
TAGF-560	560	960	960
TAGF-630	630	1030	1030

ALNOR® ventilation systems
is a legally protected trademark and technical patent. All rights reserved.

Weather collar

BAVE



Description

BAVE weather collars are designed for installation on round ventilation ducts. They can be fastened with screws to female or male connection-sized ducts.
BAVE weather collars help seal roof penetrations to eliminate water streaks and stains indoors. The finish seal is fabricated on site with caulk.
All BAVE weather collars come with four M8x50 screws and nuts.

Available materials — Product code examples

BAVE-...-...	- galvanized steel sheet
BAVE-K-...-...	- 1.4301/304 stainless steel sheet
BAVE-K-...-...-316L	- 1.4404/316L stainless steel sheet

Product code example

Product code: **BAVE - aaa**

type
Ød

Dimensions

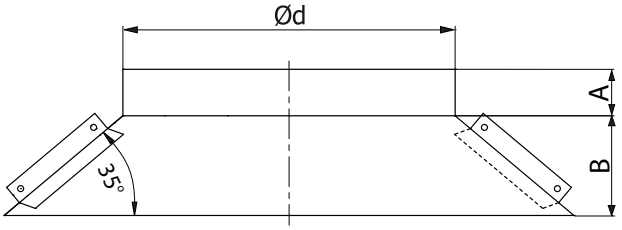

$Ød_{nom}$ [mm]	A [mm]	B [mm]
100	70	100
125	70	100
160	70	110
200	70	110
250	70	110
315	70	130
355	70	130
400	70	130
450	70	130
500	70	150
630	70	150
710	70	150

ALNOR® ventilation systems
is a legally protected trademark and technical patent. All rights reserved.

Roof curb for round roof bases
COKD



Description

COKD roof curbs are installed on the roof surface as supports for PD-B1, PD-B2 and PD-B3 roof bases. The product is available in galvanized steel, stainless steel and aluminum, plus versions with or without thermal insulation, and with a straight duct or a bend.
The standard insulating layer thickness is 50 mm.
Sloping roof curbs are designed for sloping roofs.
The standard overall height of the roof curb is 500 mm. Any overall height can be produced on request.

Insulation:
COKD - non-insulated
COKDI - insulated

Available materials — Product code examples
COKD-...-... - galvanized steel sheet
COKD-K-...-... - 1.4301/304 stainless steel sheet
COKD-K-...-...-316L - 1.4404/316L stainless steel sheet

Product code example
Product code: **COKDI - 50 - Ød - α**

type
insulation
size
angle

Dimensions

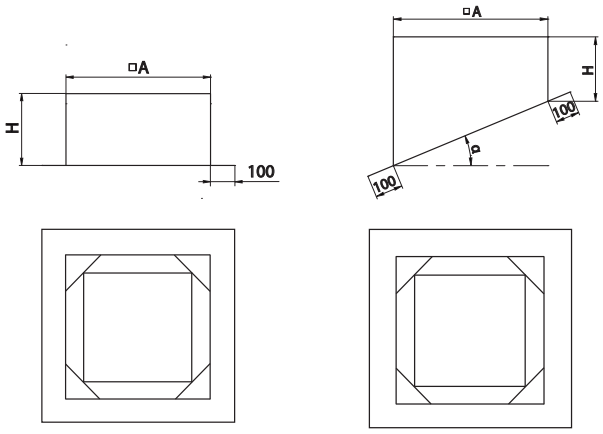

Size	A [mm]	H [mm]
100	270	500
125	290	500
140	350	500
150	370	500
160	390	500
200	430	500
250	460	500
300	500	500
315	520	500
355	600	500
400	620	500
450	710	500
500	730	500
560	790	500
630	890	500
710	1010	500
800	1090	500
1000	1260	500

ALNOR® ventilation systems
is a legally protected trademark and technical patent. All rights reserved.

Round roof exhaust vent

WD-C1



Description

A roof exhaust vent serves as a roof ventilator installed over the roof surface. The unit is usually mounted to a roof base, and both parts of the assembly are mated with FLS steel flanges which make the joint and the whole assembly very sturdy and stiff to resist strong gusts of wind. Other available versions of roof exhaust vents include male and female connection sizes for direct connection with spiral ducts and fittings or matching roof bases. The roof exhaust vent can be made from aluminium sheet or stainless steel sheet, whenever special performance or material is required.

Connection method — Product code examples

WD-C1-...-	- with FLS steel flange (standard version)
WD-C1-...-NSL	- male connector with gasket
WD-C1-...-NYPLOWE	- male connector w/o gasket
WD-C1-...-MF	- female connection for fittings
WD-C1-...-NA RURĘ	- double-sided male connector, slid over the duct

Available materials — Product code examples

WD-C1-...-...	- galvanized steel sheet
WD-C1-K-...-...	- 1.4301/304 stainless steel sheet
WD-C1-A-...-...	- aluminium sheet
WD-C1-CU-...-...	- copper sheet

Product code example

Product code: **WD-C1 - aaa - bbb**

type
Ød
connection

Dimensions

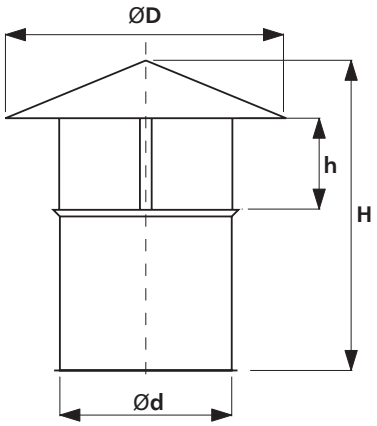

$Ød_{nom}$ [mm]	$ØD_{nom}$ [mm]	H [mm]	h [mm]	Weight [kg]
100	250	280	40	0.8
125	270	310	50	1.1
140	290	320	60	1.2
150	360	355	75	1.4
160	450	365	75	1.5
200	570	425	80	2.0
250	640	450	95	2.6
315	720	495	120	4.2
355	810	550	150	4.9
400	900	610	190	6.4
450	1000	650	220	8.5
500	1100	670	240	11.0
630	1200	760	270	16.9
710	1300	940	300	23.4
800	1400	1070	380	27.1
900	1500	1200	440	32.6

ALNOR® ventilation systems
is a legally protected trademark and technical patent. All rights reserved.

Round roof air intake unit

WD-C2



Description

WD-C2 roof exhaust vents are designed to minimize the ingress of rain into the ventilation ductwork. The available installation methods do not differ from those used for WD-C1 units, and the sloped design allows a larger cap for better protection against rain.

Connection method — Product code examples

WD-C2-...-	- with FLS steel flange (standard version)
WD-C2-...-NSL	- male connector with gasket
WD-C2-...-NYPLOWE	- male connector w/o gasket
WD-C2-...-MF	- female connection for fittings
WD-C2-...-NA RURĘ	- double-sided male connector, slid over the duct

Available materials — Product code examples

WD-C2-...-...	- galvanized steel sheet
WD-C2-K-...-...	- 1.4301/304 stainless steel sheet
WD-C2-A-...-...	- aluminium sheet
WD-C2-CU-...-...	- copper sheet

Product code example

Product code: **WD-C2 - aaa - bbb**

type
Ød
connection

Wymiary

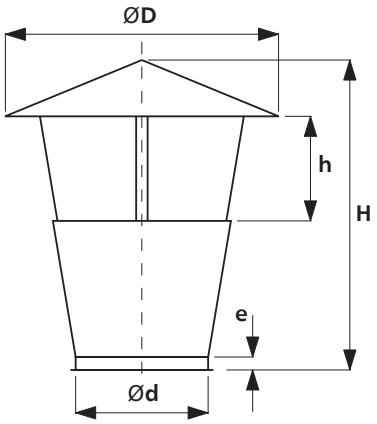

$Ød_{nom}$ [mm]	$ØD_{nom}$ [mm]	H [mm]	h [mm]	Weight [kg]
100	200	170	40	0.7
125	250	210	40	1.0
140	280	235	50	1.2
150	320	250	50	1.4
160	320	260	50	1.5
200	400	340	60	2.0
250	500	400	75	3.2
315	630	520	95	5.0
355	700	575	100	5.8
400	800	640	105	8.3
450	900	740	110	10.8
500	1000	810	110	15.8
630	1260	1010	120	25.7
710	1400	1050	140	29.0
800	1600	1260	160	41.4
900	1800	1430	200	49.5

ALNOR® ventilation systems
is a legally protected trademark and technical patent. All rights reserved.

Cylindrical roof ventilator

WD-B



Description

The type B cylindrical roof exhaust vents are made from galvanized steel sheet in the standard version. The bottom part features an FLS steel flange for connection with the roof base. The roof exhaust vent requires bracing with side stays.

Other connection types and materials are available.

Connection method - Product code examples

WD-B-...-	- with FLS steel flange (standard version)
WD-B-...-NSL	- male connector with gasket
WD-B-...-NYPLOWE	- male connector w/o gasket
WD-B-...-MF	- female connection for fittings
WD-B-...-NA RURĘ	- double-sided male connector, slid over the duct

Available materials - Product code examples

WD-B-...-...	- galvanized steel sheet
WD-B-K-...-...	- 1.4301/304 stainless steel sheet
WD-B-A-...-...	- aluminium sheet
WD-B-CU-...-...	- copper sheet

Product code example

Product code: **WD-B - aaa - bbb**

type
Ød
connection

Dimensions

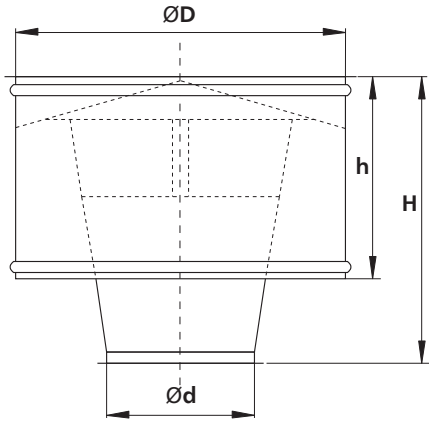

$Ød_{nom}$ [mm]	$ØD_{nom}$ [mm]	H [mm]	h [mm]	Weight [kg]
100	200	160	120	1,0
125	250	205	150	1,4
150	320	250	190	1,9
160	320	265	190	2,0
200	400	330	240	3,1
250	500	415	300	5,0
300	580	500	330	7,0
315	630	520	350	8,2
355	710	590	400	10,5
400	800	660	450	13,9
450	900	730	500	15,7
500	1000	825	550	19,9
630	1260	1040	700	38,4
800	1600	1270	900	63,6
1000	1780	1460	950	83,5

ALNOR® ventilation systems
is a legally protected trademark and technical patent. All rights reserved.

Vertical roof exhaust vent

WD-D



Description

The type D roof exhaust vents are available in galvanized steel in the standard version. The bottom part features an FLS steel flange for connection with the roof base.

Other connection types and sheet materials are available.

The base has a deflector for protection against snow and drainage of water to the outside of the vent. The roof exhaust vent requires bracing with side stays.

Since WD-D units have no standard drip features, they must only be used in continuous air flow ventilation systems.

Connection method — Product code examples

WD-D-...-	- with FLS steel flange (standard version)
WD-D-...-NSL	- male connector with gasket
WD-D-...-NYPLOWE	- male connector w/o gasket
WD-D-...-MF	- female connection for fittings
WD-D-...-NA RURĘ	- double-sided male connector, slid over the duct

Available materials — Product code examples

WD-D-...-...	- galvanized steel sheet
WD-D-K-...-...	- 1.4301/304 stainless steel sheet

Product code example

Product code: **WD-D - aaa - bbb**

type
Ød
connection

Dimensions

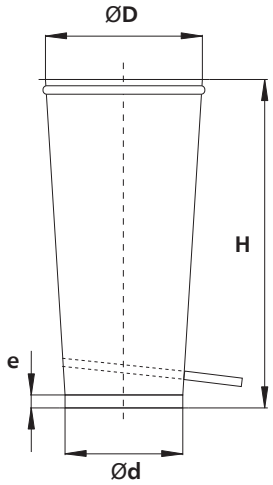

$Ød_{nom}$ [mm]	$ØD_{nom}$ [mm]	H [mm]	Weight [kg]
100	140	320	1.3
125	165	375	1.5
140	180	410	1.6
150	195	430	1.9
160	210	480	2.2
200	260	600	3.1
250	325	750	4.2
315	410	940	7.8
355	460	1080	8.9
400	520	1200	12.5
450	580	1300	15.3
500	650	1500	23.4
630	750	1890	34.8
710	820	2100	46.4
800	910	2300	56.3
900	1020	2500	68.6
1000	1150	2700	83.1

ALNOR® ventilation systems
is a legally protected trademark and technical patent. All rights reserved.

Roof exhaust vent

WD-E



Description

WD-E roof exhaust vents are used for rooftop termination of the ductwork to evacuate air to the outside. The outlet is protected against rain and snow by a sloping flange which deflects the water onto the side walls to drain it to the roofing. The standard roof exhaust vent is made from galvanized steel sheet and provided with an FLS steel flange.
The product is available on request with a male or female connection, and/or made from stainless steel or aluminium sheet

Available materials — Product code examples
WD-E-...-... - galvanized steel sheet
WD-E-K-...-... - 1.4301/304 stainless steel sheet

Product code example
Product code: **WD-E - aaa - bbb**

type
Ød
installation*

* NS - male connector

Dimensions

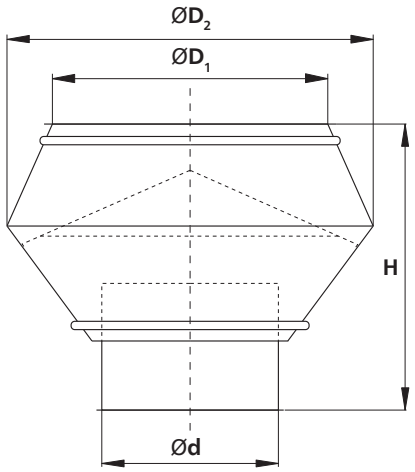

Ød$_{nom}$ [mm]	ØD$_1$ [mm]	ØD$_2$ [mm]	H [mm]	Weight [kg]
125	185	225	450	2.3
150	220	270	490	2.7
160	230	290	510	2.8
200	280	360	575	3.6
250	350	450	630	5.2
300	400	520	680	6.6
315	440	570	710	7.5
355	500	640	750	9.9
400	560	720	800	13.0
450	630	810	860	15.7
500	700	900	915	19.3
560	790	1000	970	25.5
630	880	1135	1200	34.7
710	995	1280	1320	40.5
800	1120	1400	1500	56.5
1000	1400	1600	1600	74.0

ALNOR® ventilation systems
is a legally protected trademark and technical patent. All rights reserved.

Vertical roof exhaust vent

WD-G



Description

The type G roof exhaust vent provides the ventilation system with a vertical air exhaust flow. Given the overall product height, a standard connection method is recommended, by mating the FLS steel flanges and bracing with side cable stays. The inner standing edge of the roof exhaust vent provides an efficient output for the exhaust air. The standing edge also provides a drainage surface for rain and snow water which flows off onto the roof exhaust vent walls and then down to the roofing surface. This eliminates any hazard of water ingress into the ventilation ductwork.
The available versions can be made from stainless steel sheet or aluminium sheet and with various connection styles. The roof exhaust vent requires bracing with side stays.

Connection method — Product code examples

WD-G-...-	- with FLS steel flange (standard version)
WD-G-...-NSL	- male connector with gasket
WD-G-...-NYPLOWE	- male connector w/o gasket
WD-G-...-MF	- female connection for fittings
WD-G-...-NA RURĘ	- double-sided male connector, slid over the duct

Available materials — Product code examples
WD-G-...-...- galvanized steel sheet

Product code example
Product code: **WD-G - aaa - bbb**

type
Ød
connection

Dimensions

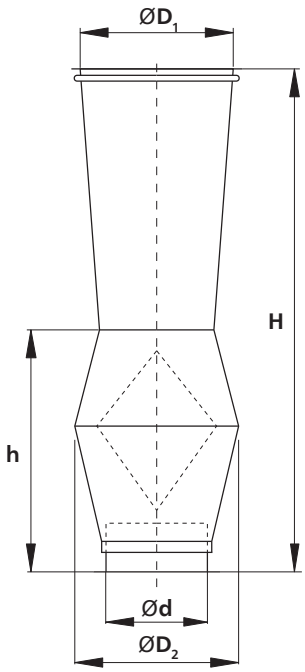

Ød$_{nom}$ [mm]	ØD$_1$ [mm]	ØD$_2$ [mm]	H [mm]	h [mm]	Weight [kg]
100	170	180	660	300	2.7
125	200	220	780	380	3.8
140	250	270	900	460	5.1
160	320	360	1230	530	6.3
200	340	400	1370	720	7.3
250	410	450	1670	780	12.6
315	450	500	1820	880	16.6
355	490	540	1950	960	17.5
400	520	640	2170	1020	25.2
500	650	800	2655	1095	44.8

ALNOR® ventilation systems
is a legally protected trademark and technical patent. All rights reserved.

Roof exhaust vent

VHLA



Description

VHLA roof air intakes/exhaust vents are made from galvanized steel. The carefully designed form and finish provide a great visual impact and a splendid match for the building's architectural style.
The VHLA roof air intakes/exhaust vents fit ducts with ød.
Standard for ød and øD is a male connection.

Upon special order VHLA might be delivered with øD as extended female connector and therefore installed onto a pre-isolated SPRI duct with 50mm thick wool.
Order code: **VHLA-FF-aaa-bbb**

Note! In F version only the most lower lamella dimension is extended.

The product can also be painted in any RAL colour. Product code for colour-painted units: **VHLA-RAL-aaa-bbb**.

Connection method - Product code examples

VHLA-…-	- male connector
VHLA-…-FLS	- with FLS steel flange
VHLA-…-MSF	- female connector for fittings
VHLA-…-NSL	- male connector with a gasket
VHLA-…-MSFF	- extended female connector - slid over the SPR duct

Product code example

Product code: **VHLA-FF - aaa - bbb**

type
Ød
conection

Dimensions

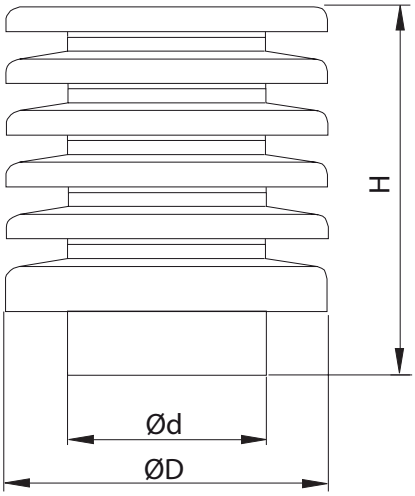

$Ød_{nom}$ [mm]	ØD [mm]	H [mm]	No. of hood caps (pcs)
100	200	183	3
125	224	183	3
160	250	223	4
200	300	263	5
250	355	303	6

ALNOR® ventilation systems
is a legally protected trademark and technical patent. All rights reserved.

Technical specifications

Selection chart
Outdoor air

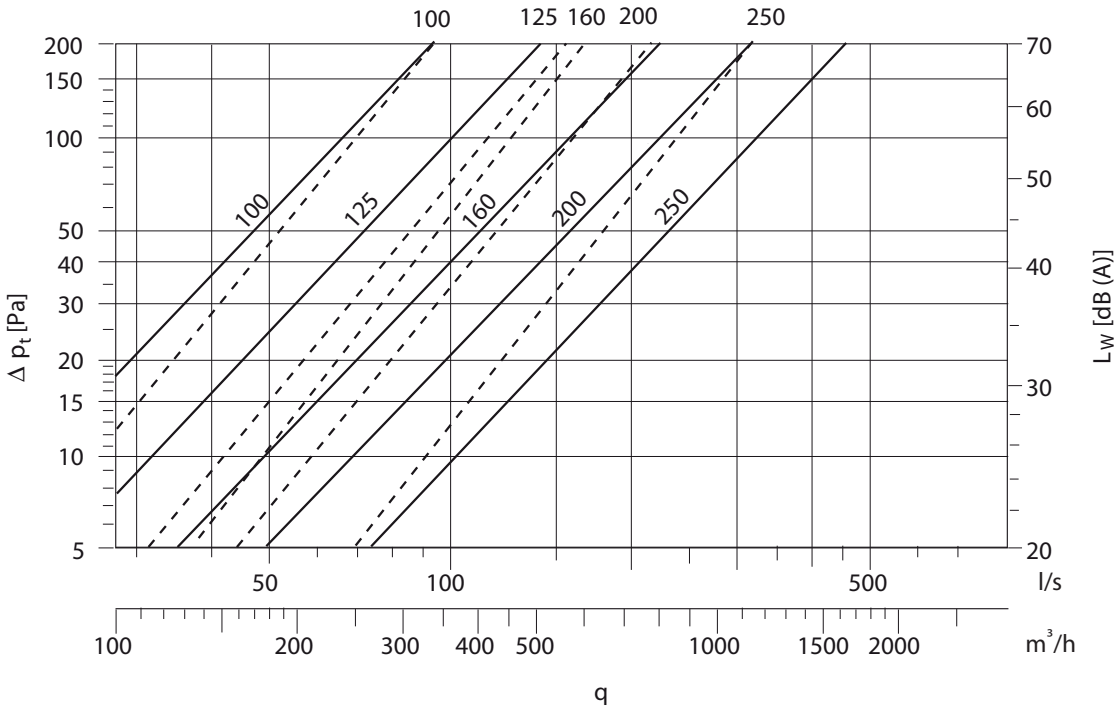

Exhausted air

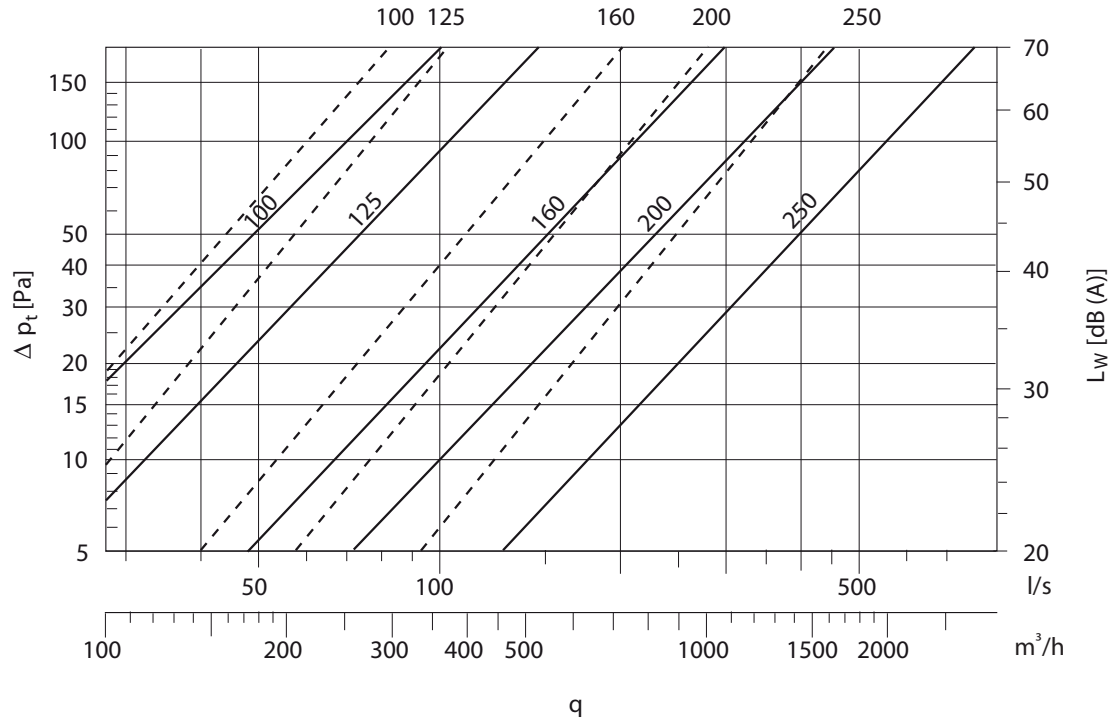

ALNOR® ventilation systems
is a legally protected trademark and technical patent. All rights reserved.

Roof cowl

VHLA-S



Description

VHLA-S Exhaust/supply roof cowl is made of segments, its modern and sleek design enhances the aesthetics of any project. Stainless steel and aluminium versions are now available as well as wider range of diameters thanks to newly implemented technology processes. VHLA-S exhaust/supply roof cowls can be powder coated in any RAL colour on special order.

Available materials - Product code examples:

VHLA-S-...-... - galvanised steel sheet
VHLA-S-...-...-RAL.... - powder-coated galvanised sheet
VHLA-S-KWS-...-... - 1.4301/304 stainless steel sheet
VHLA-S-A-...-... - aluminium sheet

Connection method - Product code examples

VHLA-S-…-MSF - female connector for fittings
VHLA-S-…-NS - male connector
VHLA-S-…-NSL - male connector with a gasket
VHLA-S-…-MSFF - extended female connector - slid over the duct

Product code example

Product code: **VHLA-S - 250 - MSF - RAL9006**

type
Ød
connection
RAL colour

Dimensions

VHLA-S < Ø250 **VHLA-S > Ø315**

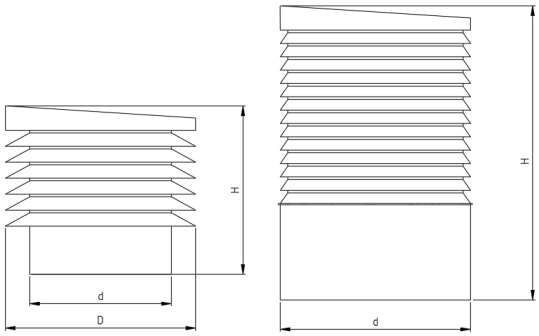

Product code	$Ød_{nom}$ [mm]	ØD [mm]	H [mm]	No. of hood caps (pcs)
VHLA-S-125	125	224	250	3
VHLA-S-160	160	250	330	5
VHLA-S-200	200	300	330	5
VHLA-S-224	224	315	330	5
VHLA-S-250	250	355	370	5

Product code	$Ød_{nom}$ [mm]	ØD [mm]	H [mm]	No. of hood caps (pcs)
VHLA-S-315	315	-	450	7
VHLA-S-355	355	-	500	8
VHLA-S-400	400	-	560	9
VHLA-S-450	450	-	630	10
VHLA-S-500	500	-	690	11
VHLA-S-560	560	-	750	12
VHLA-S-630	630	-	820	13
VHLA-S-710	710	-	900	14

ALNOR® ventilation systems
is a legally protected trademark and technical patent. All rights reserved.

Exhaust air tower

VHLA-ST



Description

VHLA-ST Supply air/ exhaust air tower is manufactured of segments, designed for ventilation duct installation. Thanks to a higher housing base in comparison to e.g. VHLA-S model, the ventilation tower does not supply air near ground. VHLA-ST design and a multitude of material versions - galvanised sheet, powder-coated, stainless steel or aluminum - make this model architecturally fit into the landscape of a modern housing estate or office complex or home installation of a ground heat exchanger.

Available materials:

VHLA-ST-...-... - galvanised steel sheet
VHLA-ST-...-...-RAL.... - powder-coated galvanised sheet
VHLA-ST-KWS-...-... - 1.430/304 stainless steel sheet
VHLA-ST-A-...-... - aluminium sheet

Connection method — Product code examples

VHLA-ST-…-MSF - female connector for fittings
VHLA-ST-…-NS - male connector
VHLA-ST-…-NSL - male connector with a gasket
VHLA-ST-…-MSFF - extended female connector - slid over the duct

Product code example

Product code: **VHLA-ST - 710 - MSF - RAL9006**

type
Ød
connection
RAL colour

Dimensions

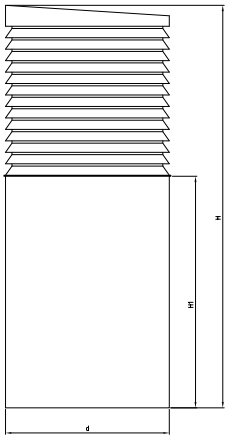

Product code	$Ød_{nom}$ [mm]	H [mm]	H_1 [mm]	No. of hood caps (pcs)
VHLA-ST-315	315	950	650	7
VHLA-ST-355	355	980	650	8
VHLA-ST-400	400	1010	650	9
VHLA-ST-450	450	1050	650	10
VHLA-ST-500	500	1090	650	11
VHLA-ST-560	560	1120	650	12
VHLA-ST-630	630	1150	650	13
VHLA-ST-710	710	1200	650	14

ALNOR® ventilation systems
is a legally protected trademark and technical patent. All rights reserved.

Circular roof cowl

WD-CS



Description

WD-CS circular roof cowls are made from galvanized steel sheet in the standard version. The bottom part is a male connector for mounting to the roof base.

The product is available on request with a female connection and/or made from stainless steel or aluminium sheet.

Product code example

Product code: **WD-CS - aaa**

type

Ød

Dimensions

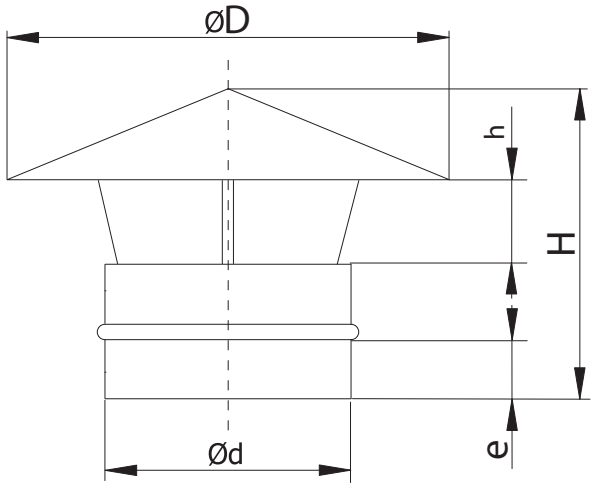

$Ød_{nom}$ [mm]	$ØD_{nom}$ [mm]	h [mm]	H [mm]
100	190	40	170
125	225	40	210
140	250	50	235
150	270	50	250
160	290	50	260
200	360	60	340
250	450	75	400
315	570	95	520
355	640	125	574
400	720	130	640
450	810	150	740
500	900	160	810
630	1140	190	1010
710	1300	230	1050
800	1400	240	1260
900	1480	300	1430

ALNOR® ventilation systems
is a legally protected trademark and technical patent. All rights reserved.

Roof turbine ventilator

WD-A-TURBO



Description

WD-TURBO roof turbine ventilators cap the exhaust end of ventilation ductwork or a flue stack.
They spin by the force of wind. By this effect and the specially designed geometry of the turbine bell vanes, the ventilator sucks out the air (or flue gas, as the case may be) to the outside.
The roof turbine ventilators enhance the stack draught effect and provide protection against ingress of rain, snow and condensation.

Symbols:
Material:
A - aluminium
K - stainless steel

Connection type:
K - round bell with baseplate
KK - round bell with flange
KNS - round bell with male connector
P - flat with baseplate

Product code example
Product code: **WD - A - TURBO - K - aaa**

type
material
connection
Ød

Dimensions

WD-A-TURBO-KNS

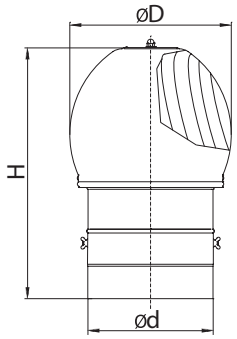

WD-A-TURBO-KK

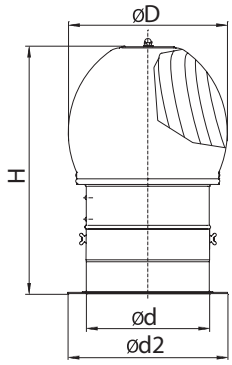

WD-A-TURBO-K

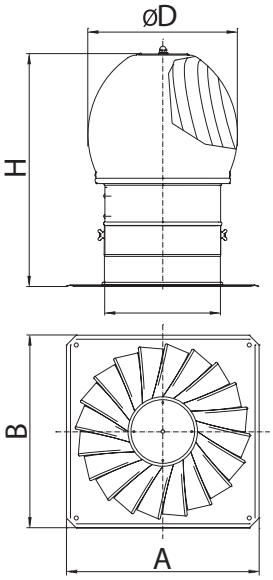

WD-A-TURBO-P

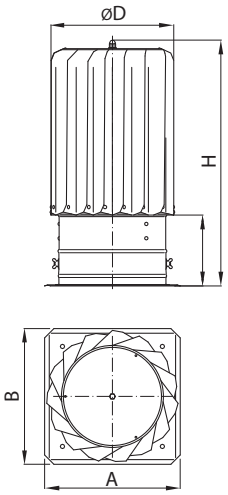

	Ød$_{nom}$ [mm]	Ød$_2$ [mm]	ØD$_{nom}$ [mm]	H [mm]	A [mm]	B [mm]
male	150	-	225	337	-	-
	160	-	240	409		
	200	-	300	409	-	-
	250	-	360	475	-	-
flanged	300	-	430	532	-	-
	150	210	225	217	-	-
	160	220	240	222		
	200	260	300	283	-	-
	250	310	360	365	-	-
	300	360	430	412	-	-
w/base	150	-	225	217	333	333
	160	-	240	222	333	333
	200	-	300	283	333	333
	250	-	360	365	390	390
	300	-	430	412	440	440
slim	150	-	185	345	190	190

ALNOR® ventilation systems
is a legally protected trademark and technical patent. All rights reserved.

Take-off bends with wire mesh

BSAVL-90/BSAV-90



Description

Take-off bends are air exhaust pieces for termination of ventilation ductwork made of spiral coiled ducts or other round duct types. They are made of BS or BSL segmented bends (depending on the length size) coupled by factory-made seal and hem with an ASV-45 angle take-off provided with wire mesh. The flared top of the take-off helps protect against ingress of rain and snow, and the 12.7x12.7 mm mesh protects against birds and large insects. The product is designed for exhaust ventilation systems in which the bend has a male connection size for joining with other compatible ductwork pieces. Versions provided with an FLS steel flange connection and made from stainless steel / aluminium are available on request.

Available materials — Product code examples

BSAVL-90-... - galvanized steel sheet
BSAVL-90-K-...-... - 1.4301/304 stainless steel sheet
BSAVL-90-K-...-316L - 1.4404/316L stainless steel sheet, molybdenum-enriched

Product code example

Product code: **BSAVL - 90 - aaa**

type
angle
Ød$_1$

Dimensions

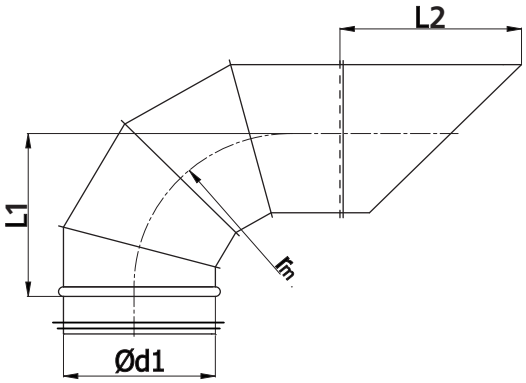

$r_m \approx 1 \times d_1$

Ød$_{1\ nom}$ [mm]	L_1 [mm]	L_2 [mm]	Weight [kg]
200	200	100	1.71
224	224	258	2.04
250	250	317	2.81
280	280	344	3.17
300	300	364	3.80
315	315	380	3.90
355	355	422	5.94
400	400	467	7.86
450	450	546	12.54
500	500	594	14.11
560	560	656	18.75
600	600	698	21.77
630	630	727	23.11
710	710	838	35.63
800	800	928	44.50
900	900	1027	55.16
1000	1000	1127	123.15

Technical specifications

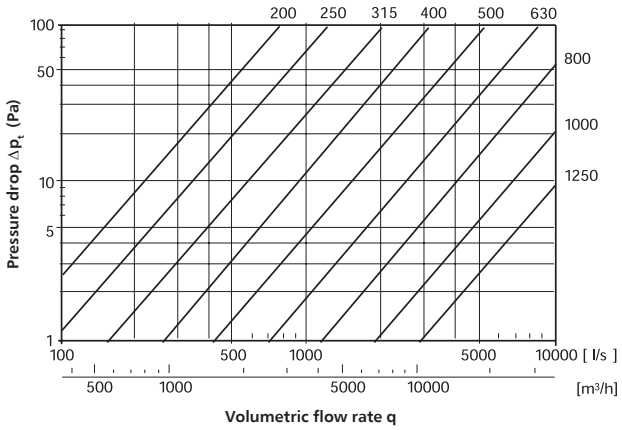

ALNOR® ventilation systems
is a legally protected trademark and technical patent. All rights reserved.

Outdoor vent take-off bend with wire mesh

BSILNL-135/BSILN-135



Description

Round segmented take-off bends serve as roof exhaust vents in mechanical, heat-recovery and gravity ventilation systems. The 135-degree angle of the mouth helps protect against ingress of rain, snow and water. The 12.7x12.7 mm mesh protects against leaves, debris and birds. The take-off bend can be used as an exhaust vent or an air intake unit. The male connector fits spiral ducts and type B1 round roof bases. The product is available on request with an FLS steel flange or a female connector size for combining with ventilation fittings.

Available materials — Product code examples

BSILNL-135-... - galvanized steel sheet
BSILNL-135-K-...-... - 1.4301/304 stainless steel sheet
BSILNL-135-K-...-316L - 1.4404/316L stainless steel sheet, molybdenum-enriched

Product code example

Product code: **BSILNL - 135 - aaa**

type
angle
Ød$_1$

Dane techniczne

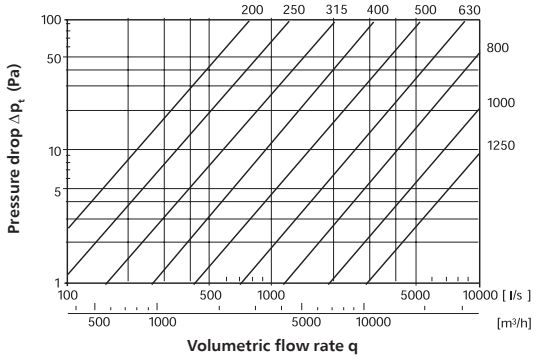

Dimensions

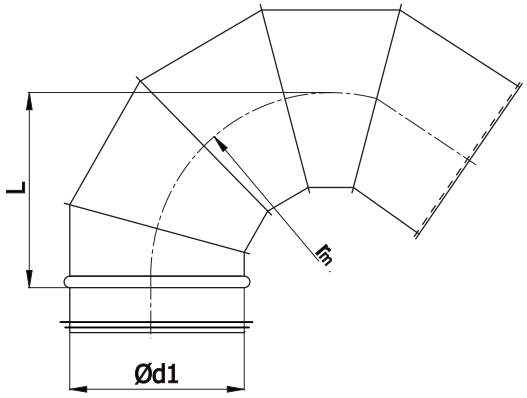

$r_m \approx 1 \times d_1$

Ød$_{1\ nom}$ [mm]	L [mm]	Weight [kg]
200	200	1.11
224	224	1.33
250	250	1.64
280	280	2.04
300	300	2.31
315	315	2.51
355	355	3.74
400	400	5.11
450	450	8.02
500	500	9.62
560	560	11.82
600	600	13.34
630	630	14.55
710	710	22.45
800	800	28.05
900	900	34.65
1000	1000	43.05
1120	1120	59.85
1250	1250	73.08
1400	1400	90.08
1500	1500	103.48
1600	1600	116.69

ALNOR® ventilation systems
is a legally protected trademark and technical patent. All rights reserved.

Roof cowl with mesh

CD-O-P / CD-S-P / CD-P-P



Description

CD-S-P / CD-O-P / CD-P-P Supply air roof cowl is designed to be placed on roof of residential buildings. The roof cowl has aesthetic design made of perforated metal sheet (square holes) and 3 types of top hats - pitched, round and flat. The mesh ensures proper airflow and simultaneously prevents birds, leaves and others from entering into the duct termination point. CD-S-P / CD-O-P / CD-P-P Supply air roof cowl has few types of connection fitted for different duct terminations.

Available versions:


CD-S-P - pitched hat


CD-O-P - round hat


CD-P-P - flat hat

Connection method — Product code examples
CD-…-P-…-MSF - female connector for fittings
CD-…-P-…-NS - male connector
CD-…-P-…-NSL - łmale connector with a gasket (cannot be powder coated)
CD-…-P -…-MSFF - extended female connector - slid over the duct

Available materials — Product code examples
CD-…-P-…-… - galvanised steel sheet
CD-…-P-…-…-RAL - galvanised sheet powder-coated in any colour from the RAL palette (except NSL version with a seal)

Product code example
Product code: **CD-S-P - 160 - NSL - RAL**

type
Ød
connection
RAL colour

Wymiary

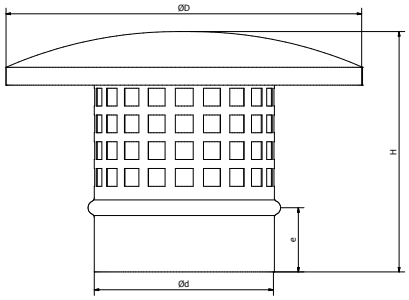

CD-O-P			
Ød [mm]	ØD [mm]	H [mm]	e [mm]
100	200	165	36
125	224	170	36
160	250	200	36

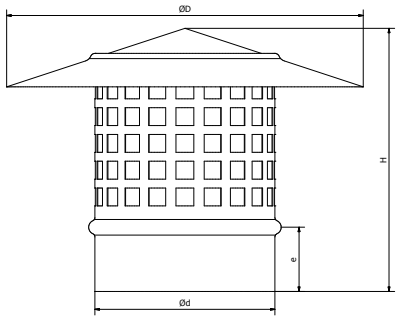

CD-S-P			
Ød [mm]	ØD [mm]	H [mm]	e [mm]
100	200	165	36
125	224	170	36
160	250	200	36

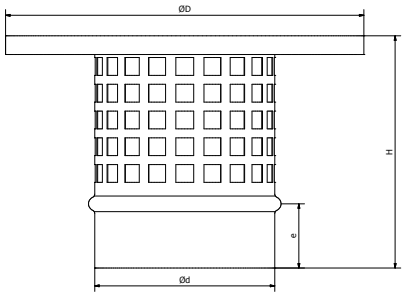

CD-P-P			
Ød [mm]	ØD [mm]	H [mm]	e [mm]
100	200	145	36
125	250	150	36
160	250	180	36

ALNOR® ventilation systems
is a legally protected trademark and technical patent. All rights reserved.

Straight roof air intake

CD-C1



Description

A standard roof air intake to be installed on type B1, B2 and B3 round roof bases. The 12.7x12.7 mm mesh protects against leaves, debris and birds. The cap at the top protects against rain, snow and water. The standard connection for this product is an FLS steel flange which can be replaced with a male connector for spiral ducts or a female connector suitable for fittings and roof bases (with a male connection size). Such replacement is recommended only for small diameter sizes. The versions available in stainless steel or aluminium enable using the air intake in non-standard ventilation systems.

The roof air intake is provided with 12.7x12.7 mm galvanized steel wire mesh made of 1 mm wires for protection against debris.

Connection method — Product code examples

CD-C1-...-	- with FLS steel flange (standard version)
CD-C1-...-NSL	- male connector with gasket
CD-C1-...-NYPLOWE	- male connector w/o gasket
CD-C1-...-MF	- female connection for fittings
CD-C1-...-NA RURĘ	- double-sided male connector, slid over the duct

Available materials — Product code examples

CD-C1-...-...	- galvanized steel sheet
CD-C1-K-...-...	- 1.4301/304 stainless steel sheet
CD-C1-K-...-316L	- 1.4404/316L stainless steel sheet, molybdenum-enriched

Product code example

Product code: **CD-C1 - aaa - bbb**

type
Ød
connection

Dimensions

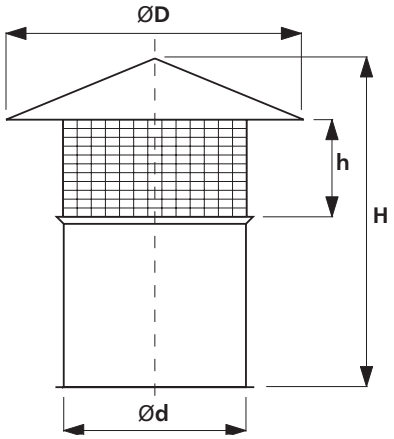

Ød [mm]	ØD [mm]	H [mm]	h [mm]	Weight [kg]
100	250	280	40	0,9
125	270	310	50	1,2
140	290	320	60	1,3
150	360	355	75	1,5
160	450	365	75	1,6
200	570	425	80	2,2
250	640	450	95	2,7
315	720	495	120	4,4
355	810	550	150	5,2
400	900	610	190	6,7
450	1000	650	220	9,0
500	1100	670	240	11,3
630	1200	760	270	17,4
710	1300	940	300	24,2
800	1400	1070	380	28,0
900	1500	1200	440	33,5

ALNOR® ventilation systems
is a legally protected trademark and technical patent. All rights reserved.

Flared roof air intake unit
CD-C2



Description

The type C2 flared roof air intake units are made from galvanized steel sheet in the standard version. The bottom part features an FLS steel flange for connection with the roof base. The roof air intake is available on request with other connection styles and/or made from stainless steel or aluminium sheet. The roof air intake is provided with 12.7x12.7 mm galvanized steel wire mesh made of 1 mm wires for protection against debris

Connection method — Product code examples

CD-C2-...-	- with FLS steel flange (standard version)
CD-C2-...-NSL	- male connector with gasket
CD-C2-...-NYPLOWE	- male connector w/o gasket
CD-C2-...-MF	- female connection for fittings
CD-C2-...-NA RURĘ	- double-sided male connector, slid over the duct

Available materials — Product code examples

CD-C2-...-...	- galvanized steel sheet
CD-C2-K-...-...	- 1.4301/304 stainless steel sheet
CD-C2-K-...-316L	- 1.4404/316L stainless steel sheet, molybdenum-enriched

Product code example

Product code: **CD-C2 - aaa - bbb**

type
Ød
connection

Dimensions

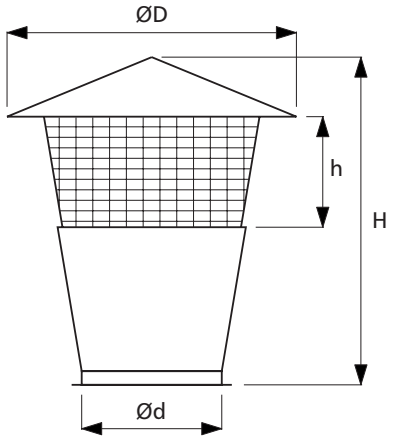

Ød [mm]	ØD [mm]	H [mm]	h [mm]	Weight [kg]
100	200	170	40	0,8
125	250	210	40	1,1
140	280	235	50	1,3
150	320	250	50	1,5
160	320	260	50	1,6
200	400	340	60	2,3
250	500	400	75	3,4
315	630	520	95	5,3
355	700	575	100	6,2
400	800	640	105	8,8
450	900	740	110	11,5
500	1000	810	110	16,5
630	1260	1010	120	26,5
710	1400	1050	140	30,0
800	1600	1260	160	42,6
900	1800	1430	200	50,9

ALNOR® ventilation systems
is a legally protected trademark and technical patent. All rights reserved.

Ventilation chimney cowl for round ducts
RHA



Description

The ventilation chimney cowl is the easiest, simplest and most budget-friendly all-rounder of all possible vertical air exhaust ends in installation systems built with round ducts and fittings. The product is available in 3 different sizes, each for a specific diameter range. The product is installed by bending down the 3 or 4 legs to fit the connected spiral duct, inserting the legs down to the stop, and fastening them with WGO screws or blind rivets. Optional versions are available on request, made from stainless steel sheet or aluminium sheet.

Available materials — Product code examples

RHA-...	- galvanized steel sheet
RHA-K-...	- 1.4301/304 stainless steel sheet
RHA-K-...-316L	- 1.4404/316L stainless steel sheet, molybdenum-enriched

Product code example

Product code: **RHA - aaa**

type*
Ød

* RHA-1 — suitable for ducts in diameters ≈ 80-125
* RHA-2 — suitable for ducts in diameters ≈ 140-200
* RHA-3 — suitable for ducts in diameters ≈ 224-315

Description

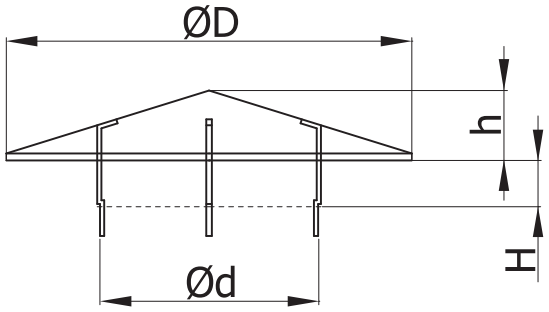

Ød [mm]	H *[mm]*	*h [mm]*	*ØD [mm]*	*Legs (pcs)*	*Weight (kg)*
80 – 125	50	30	180	3	0.2
140 – 200	75	45	290	3	0.5
224 – 315	100	75	505	4	1.3

ALNOR® ventilation systems
is a legally protected trademark and technical patent. All rights reserved.

Ventilation chimney cowl
VHK



Description

VHK ventilation chimney cowls offer a great solution for roof air intakes or exhausts in industrial or housing ventilation systems.

They are made from galvanized steel sheet in the standard version; non-standard versions in stainless steel sheet, aluminium sheet or plastic-coated steel sheet (in various colours) are available on request. The intake mouth is protected by a steel mesh. The standard version has a connector port; a flanged version is available on request.

Available materials — Product code examples

VHK-...	- galvanized steel sheet
VHK-K-...	- 1.4301/304 stainless steel sheet
VHK-K-...-316L	- 1.4404/316L stainless steel sheet, molybdenum-enriched
VHK-A-...	- aluminium sheet
VHK-A-...	- copper sheet

Product code example

Product code: **VHK - aaa**

type

$Ød_1$

Dimensions

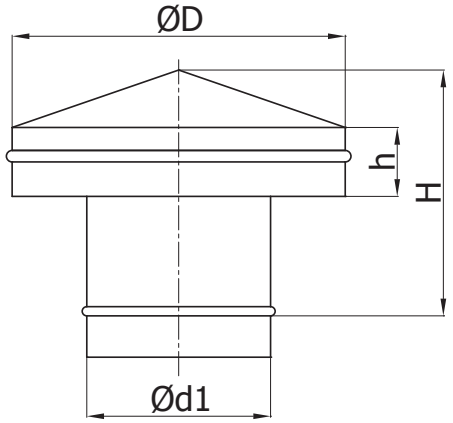

$Ød_1$ [mm]	ØD [mm]	h [mm]	H [kg]	Weight [kg]
80	180	60	133	0,7
100	180	60	133	0,7
125	224	60	139	0,9
140	290	60	148	1,0
150	290	60	148	1,1
160	290	60	148	1,1
180	360	100	197	1,7
200	360	100	197	1,9
224	405	100	208	2,4
250	450	100	228	2,6
280	570	100	244	3,6
300	570	100	244	3,8
315	570	100	244	4,1
355	720	150	337	6,0
400	720	150	337	6,2
450	810	150	349	7,2
500	900	200	411	11,2
560	1080	200	435	12,0
600	1080	200	435	12,2
630	1135	200	442	12,8
710	1280	200	482	14,5
800	1440	200	503	18,0

ALNOR® ventilation systems
is a legally protected trademark and technical patent. All rights reserved.

Ventilation chimney cowl
VHK

Technical specifications

Exhaust vent

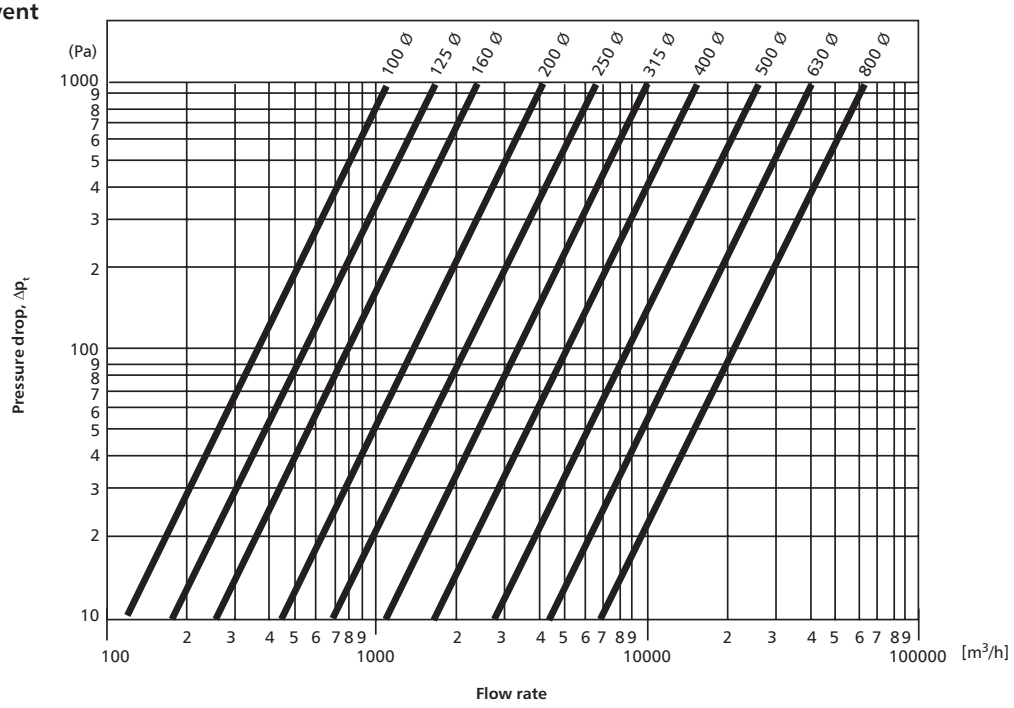

Air intake

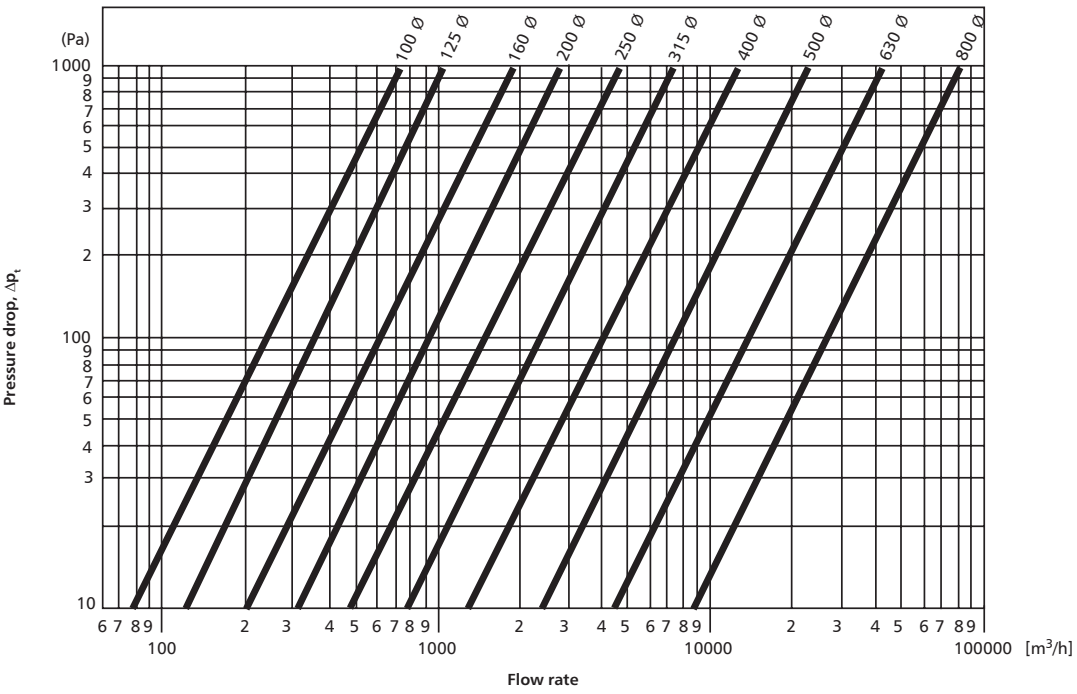

ALNOR® ventilation systems
is a legally protected trademark and technical patent. All rights reserved.

Air intake and roof exhaust units

HAN/HAF



Description

HAN/HAF roof exhaust units are suitable for both industrial and housing ventilation systems.

The air is exhausted in a vertical stream to avoid contamination of the air and the nearby roof surface. This roof exhaust unit is so efficient that roof air intakes can be installed very close by.

The standard version is made from galvanized steel sheet; non-standard versions in stainless steel sheet, aluminium sheet, or plastic-coated steel sheet (in various colours) are available on request. The roof exhaust unit is topped with a 1/2-inch wire mesh and has an inner deflector flange for protection against snow and drainage of water to the outside of the vent.

Standard HAN roof exhaust units are manufactured with male flanges, female flanges, and double-sided female connections (for sliding over a duct).
Standard HAF roof exhaust units come with FLS steel flanges.

NOTE:
HAN - mounted over a fitting (female connector), into a duct (male connector), or over a duct (double-sided fe male connector);,
HAF - FLS steel flange connection.

Available materials — Product code examples
HAN/HAF-...- galvanized steel sheet
HAN/HAF-K-...- 1.4301/304 stainless steel sheet

Product code example
Product code: **HAN - aaa**

type
$Ød_1$

Dimensions

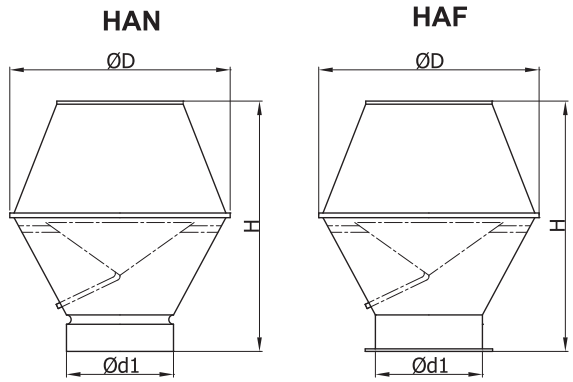

H = installation height for **HAN/HAF**

$Ød_1$ [mm]	ØD [mm]	H [mm]	HAF weight (kg)	HAN weight (kg)
100	180	220	1,1	0,7
125	225	240	1,4	0,9
140	245	280	1,5	1,0
150	265	315	1,8	1,3
160	280	340	1,9	1,3
180	310	375	2,2	1,6
200	345	420	2,8	2,1
224	385	475	3,1	2,3
250	430	505	3,7	2,9
280	480	585	5,3	4,2
300	515	600	6,2	5,0
315	550	620	7,7	6,4
355	615	705	9,3	7,9
400	685	905	15,7	14,1
450	775	970	18,3	16,5
500	855	1055	21,3	19,3
560	955	1170	25,9	23,4
600	1015	1255	32,0	29,3
630	1075	1300	33,5	30,7
710	1215	1490	46,3	43,1

ALNOR® ventilation systems
is a legally protected trademark and technical patent. All rights reserved.

Technical specifications

Pressure drop

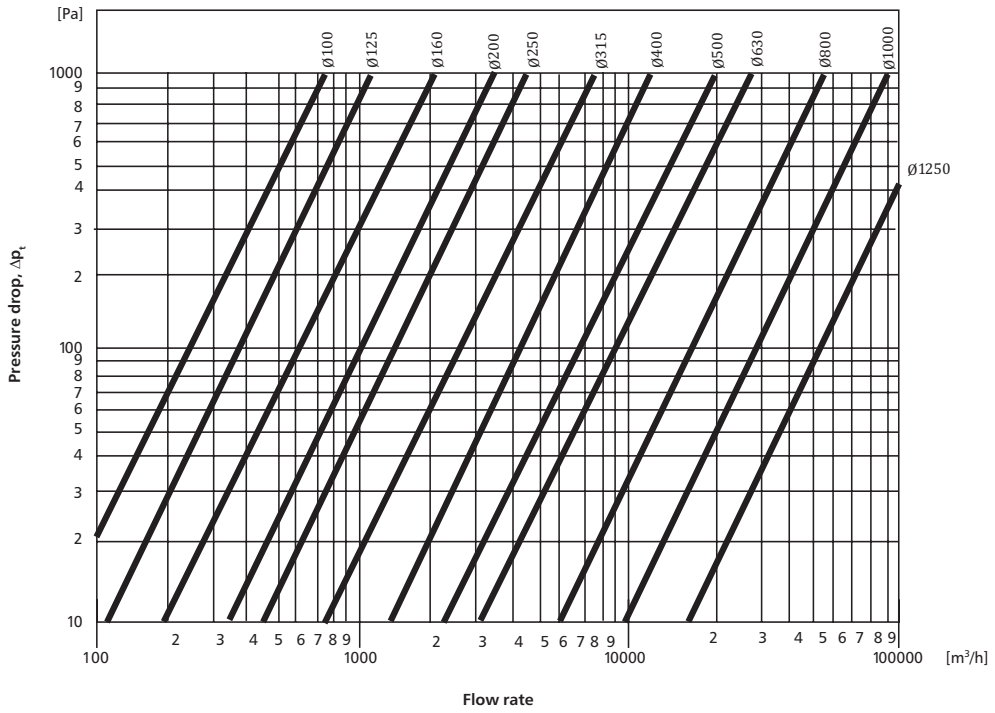

Sound ratings

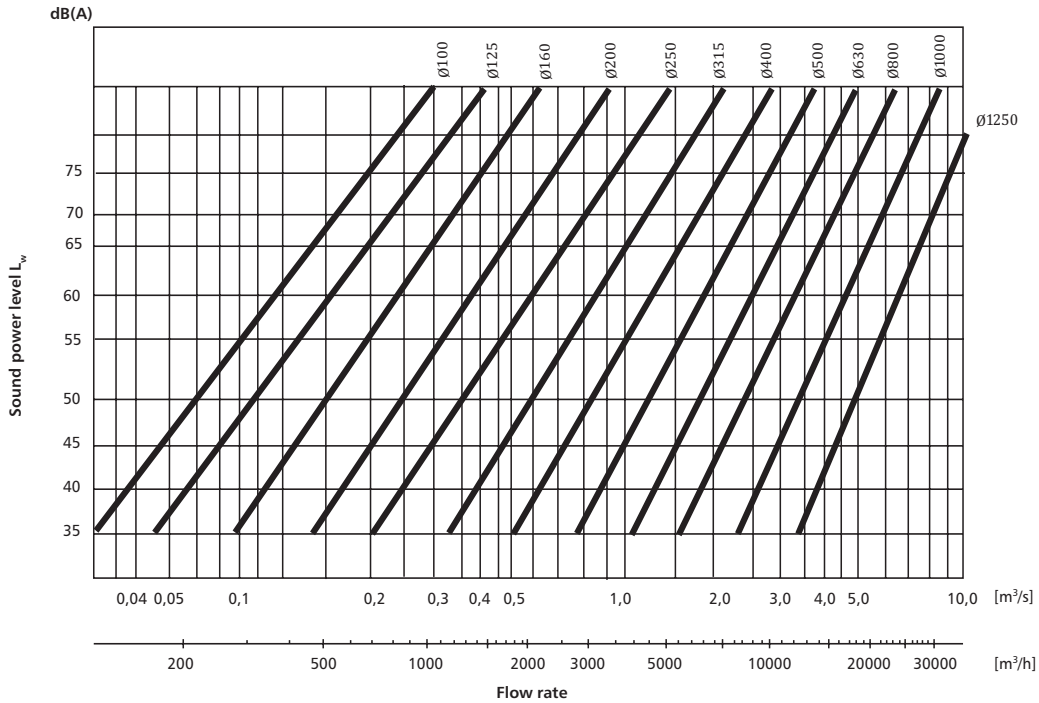

ALNOR® ventilation systems
is a legally protected trademark and technical patent. All rights reserved.

Square roof hood base

PDQ-AI

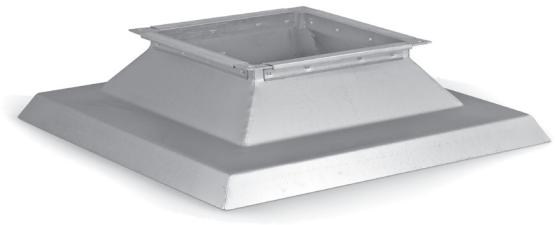

Description

PDQ-AI roof bases are designed for termination of ventilation systems directly at the roof surface. The top part has a PQ30 frame angle flange to fit square air intakes and exhaust units. The product is available in all square cross-section sizes with the side length up to 1400 mm. The standard version is intended for flat roofs. The product is optionally available in stainless steel and aluminium sheet.

Available materials — Product code examples
PDQ-AI-...-...- galvanized steel sheet

Product code example
Product code: **PDQ-AI - 400 - 400**

type
a
b

Product code examples for standard sizes:
PDQ-AI-a-b **PDQ-AI-400-400**
Medium-pressure version:
PDQ-AI-a-b-S **PDQ-AI-400-400-S**

Dimensions

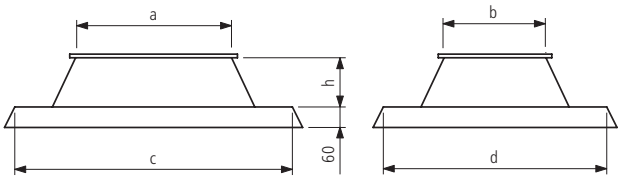

a x b *[mm]*	*c x d* *[mm]*	*h* *[mm]*
200×200	498 x 498	125
300×300	626 x 626	150
400×400	755 x 755	175
500×500	885 x 885	200
600×600	1014 x 1014	225
700 x 700	1143 x 1143	250
800×800	1272 x 1272	275
900 x 900	1401 x 1401	300
1000×1000	1531 x 1531	325
1100 x 1100	1660 x 1660	350
1200×1200	1789 x 1789	375
1300 x 1300	1917 x 1917	400
1400 x 1400	2046 x 2046	425

ALNOR® ventilation systems
is a legally protected trademark and technical patent. All rights reserved.

Square roof air intake/exhaust hood base

PDQ-AII



Description

PDQ-AII roof bases provide a connection between square ductwork and a roof ventilator or exhaust vent. The bottom part is an extended square duct, fabricated to the ordered size (max. 1400x1400 mm). The top part of the standard version is designed for installation on flat roofs and made of PQ30 frame angles to fit square air intakes and exhaust units. The roof base is also available, on request, in stainless steel or aluminium sheet.

Available materials - Product code examples
PDQ-AII-...-... - galvanized steel sheet

Product code example
Product code: **PDQ-AII - 400 - 400**

type
a
b

Product code examples for standard sizes:
PDQ-AII-a-b **PDQ-AII-400-400**
Medium-pressure version:
PDQ-AII-a-b-S **PDQ-AII-400-400-S**

The square duct angle frame is made to Polish standards.

Dimensions

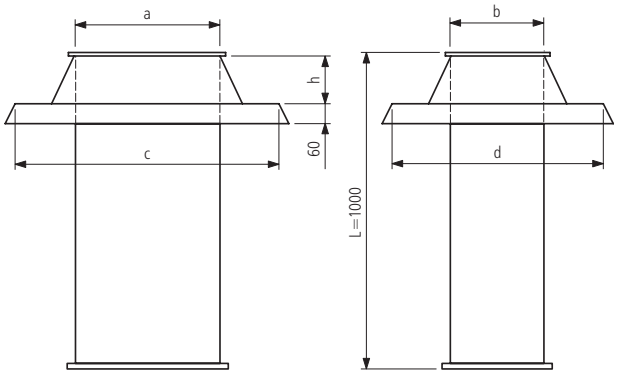

a x b *[mm]*	*c x d* *[mm]*	*h* *[mm]*
200×200	498 x 498	125
300×300	626 x 626	150
400×400	755 x 755	175
500×500	885 x 885	200
600×600	1014 x 1014	225
700 x 700	1143 x 1143	250
800×800	1272 x 1272	275
900 x 900	1401 x 1401	300
1000×1000	1531 x 1531	325
1100 x 1100	1660 x 1660	350
1200×1200	1789 x 1789	375
1300 x 1300	1917 x 1917	400
1400 x 1400	2046 x 2046	425

ALNOR® ventilation systems
is a legally protected trademark and technical patent. All rights reserved.

Roof curb for square roof bases
CQKD

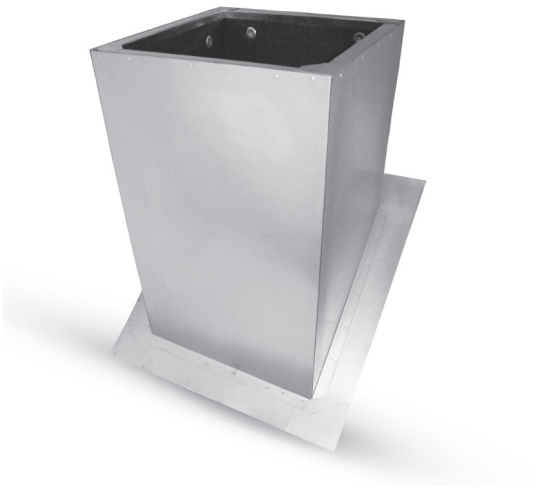

Description

CQKD roof curbs are installed on the roof surface as supports for PDQ-AI and PDQ-AII roof bases. The product is available in galvanized steel, stainless steel and aluminium, plus versions with or without thermal insulation, and with a straight duct or a bend.
The standard insulating layer thickness is 50 mm.
Sloping roof curbs are designed for
sloping roofs.
The standard overall height of the roof curb is 500 mm. Any overall height can be produced on request.

Insulation:
I - insulated

Available materials - Product code examples
CQKD-50-...-... - galvanized steel sheet
CQKD-50-K-...-... - 1.4301/304 stainless steel sheet
CQKD-50-K-...-...-316L - 1.4404/316L stainless steel sheet, molybdenum-enriched

Product code example
Product code: **CQKDI - 50 - AxB - α**

type
insulation
size
angle

Dimensions

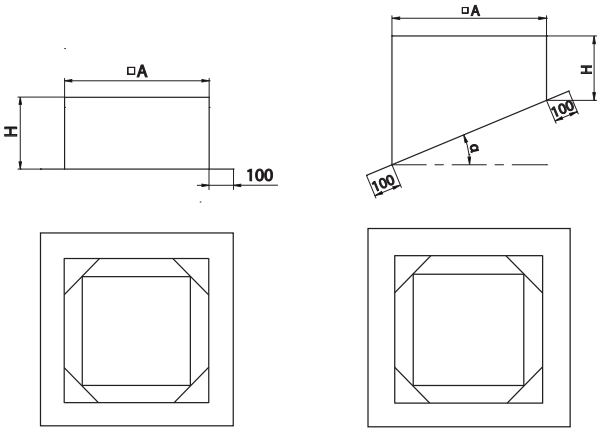

Size [mm]	A [mm]	H [mm]
200 x 200	458	500
300 x 300	586	500
400 x 400	715	500
500 x 500	845	500
600 x 600	974	500
700 x 700	1103	500
800 x 800	1232	500
900 x 900	1361	500
1000 x 1000	1491	500
1100 x 1100	1620	500
1200 x 1200	1749	500
1300 x 1300	1877	500
1400 x 1400	2006	500

ALNOR® ventilation systems
is a legally protected trademark and technical patent. All rights reserved.

Square roof air intake unit

CDQ-A



Description

CDQ-A roof air intake units provide air entry termination in air intake ventilation systems.
They is provided with 12.7x12.7 mm galvanized steel wire mesh made of 1 mm wires for protection against debris.
CDQ-A roof air intakes are made from galvanized steel sheet.
The flange is an PQ angle frame with NQ corner straps.

Available materials — Product code examples

CDQ-A-...-...	- galvanized steel sheet
CDQ-A-K-...-...	- 1.4301/304 stainless steel sheet
CDQ-A-K-...-...-316L	- 1.4404/316L stainless steel sheet, molybdenum-enriched

Product code example

Product code: **CDQ-A - 400 - 400**

type
a
b

Product code examples for standard sizes:

CDQ-A-a-b **CDQ-A-400-400**

Medium-pressure version:

CDQ-A-a-b-S **CDQ-A-400-400-S**

Dimensions

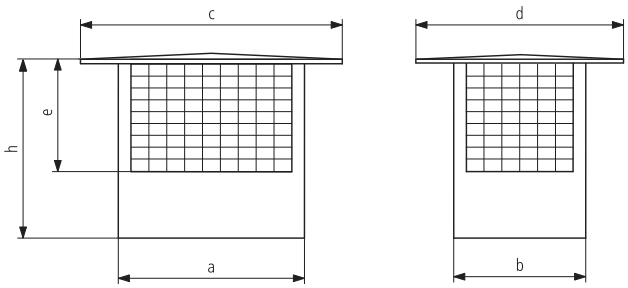

a x b *[mm]*	*c* *[mm]*	*d* *[mm]*	*e* *[mm]*	*h* *[mm]*
200 x 200	420	420	110	450
300 x 300	560	560	130	470
400 x 400	760	760	180	520
500 x 500	920	920	210	550
600 x 600	1080	1080	240	580
700 x 700	1260	1260	280	620
800 x 800	1460	1460	330	670
900 x 900	1640	1640	370	710
1000 x 1000	1820	1820	410	750
1100 x 1100	1980	1980	440	780
1200 x 1200	2160	2160	480	820
1300 x 1300	2340	2340	520	860
1400 x 1400	2520	2520	560	900

ALNOR® ventilation systems
is a legally protected trademark and technical patent. All rights reserved.

Louvre roof air intake hood

CDQ-B



Description

The product is intended for rooftop installation or directly over buried heat exchanger units in heat-recovery systems. The unit admits air into the ventilation system. It is made from galvanized steel sheet. The horizontal louvre blades protect against ingress of rain, snow and water. The 12.7x12.7 mm mesh protects the air intake against birds, large insects, leaves and debris. The bottom of the CDQ-B air intake unit is trimmed with PQ-30 or PQ-20 angles for direct fastening with SRS screws, NKS nuts and KLQ G-clamps to a roof base or a square duct.

Available materials — Product code examples
CDQ-B-...-... - galvanized steel sheet
CDQ-B-K-...-... - 1.4301/304 stainless steel sheet

Product code example
Product code: **CDQ-B - 400 - 400**

typ
a
b

Product code examples for standard sizes:
CDQ-B-a-b **CDQ-B-400-400**
Medium-pressure version:
CDQ-B-a-b-S **CDQ-B-400-400-S**

Dimensions

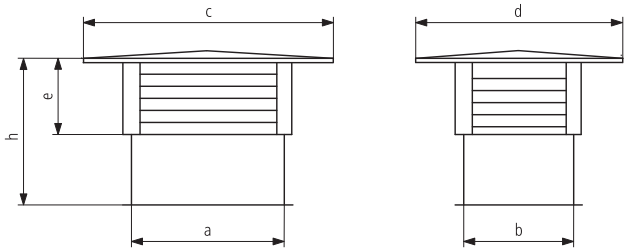

a x b [mm]	*c [mm]*	*d [mm]*	*e [mm]*	*h [mm]*	*Clearance*
200 x 200	360	360	340	620	79%
300 x 300	460	460	400	680	78%
400 x 400	560	560	460	740	77%
500 x 500	660	660	520	800	77%
600 x 600	760	760	640	920	77%
700 x 700	860	860	700	980	76%
800 x 800	960	960	760	1040	76%
900 x 900	1060	1060	820	1100	76%
1000 x 1000	1160	1160	940	1220	76%
1100 x 1100	1260	1260	1000	1280	76%
1200 x 1200	1360	1360	1060	1340	76%
1300 x 1300	1460	1460	1120	1400	76%
1400 x 1400	1560	1560	1240	1520	76%

ALNOR® ventilation systems
is a legally protected trademark and technical patent. All rights reserved.

Roof exhaust vent

WDQ-A



Description

WDQ-A roof exhaust vents offer the best budget option on the market for square ductwork systems. The cap protects against rain, snow and water, while the wide gaps in the side walls help to ensure efficient air exhaust from the ventilation system. The standard version is made from galvanized steel sheet and trimmed with PQ-20 or PQ-30 angles for fastening to a roof base or directly to a square duct. Other angles and materials are available or request, including PQ-40 units or versions in stainless steel sheet and aluminium sheet.

Available materials — Product code examples

WDQ-A-...-... - galvanized steel sheet
WDQ-A-K-...-... - 1.4301/304 stainless steel sheet
WDQ-A-K-...-...-316L - 1.4404/316L stainless steel sheet molybdenum-enriched

Product code example

Product code: **WDQ-A - 400 - 400**

type
a
b

Product code examples for standard sizes:

WDQ-A-a-b **WDQ-A-400-400**

Medium-pressure version:

WDQ-A-a-b-S **WDQ-A-400-400-S**

Dimensions

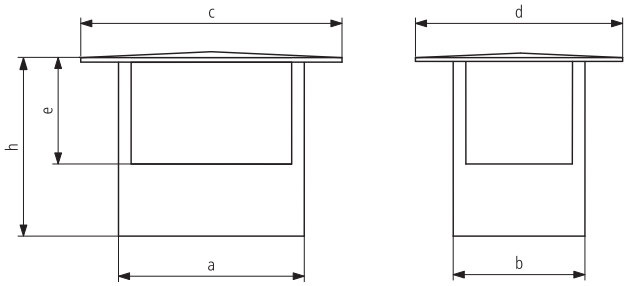

a x b *[mm]*	*c* *[mm]*	*d* *[mm]*	*e* *[mm]*	*h* *[mm]*
200 x 200	420	420	110	450
300 x 300	560	560	130	470
400 x 400	760	760	180	520
500 x 500	920	920	210	550
600 x 600	1080	1080	240	580
700 x 700	1260	1260	280	620
800 x 800	1460	1460	330	670
900 x 900	1640	1640	370	710
1000 x 1000	1820	1820	410	750
1100 x 1100	1980	1980	440	780
1200 x 1200	2160	2160	480	820
1300 x 1300	2340	2340	520	860
1400 x 1400	2520	2520	560	900

ALNOR® ventilation systems
is a legally protected trademark and technical patent. All rights reserved.

Louvre roof exhaust hood

WDQ-B



Description

WDQ-B roof exhaust vents feature horizontal louvres; these reduce the air exhaust flow below the performance ratings of WDQ-A units while minimizing to a great extent the risk of rain, snow, or water ingress. The standard installation method requires bolting PQ angles to a roof base or a duct, either made from galvanized steel sheet. The product is available in stainless steel sheet on request.

Available materials — Product code examples
WDQ-B-...-... - galvanized steel sheet
WDQ-B-K-...-... - 1.4301/304 stainless steel sheet

Product code example
Product code: **WDQ-B - 400 - 400**

type
a
b

Product code examples for standard sizes:
WDQ-B-a-b **WDQ-B-400-400**
Medium-pressure version:
WDQ-B-a-b-S **WDQ-B-400-400-S**

Dimensions

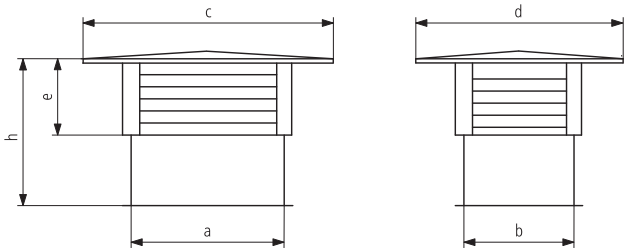

a x b [mm]	*c [mm]*	*d [mm]*	*e [mm]*	*h [mm]*	*Clearance*
200 x 200	360	360	340	620	79%
300 x 300	460	460	400	680	78%
400 x 400	560	560	460	740	77%
500 x 500	660	660	520	800	77%
600 x 600	760	760	640	920	77%
700 x 700	860	860	700	980	76%
800 x 800	960	960	760	1040	76%
900 x 900	1060	1060	820	1100	76%
1000 x 1000	1160	1160	940	1220	76%
1100 x 1100	1260	1260	1000	1280	76%
1200 x 1200	1360	1360	1060	1340	76%
1300 x 1300	1460	1460	1120	1400	76%
1400 x 1400	1560	1560	1240	1520	76%

ALNOR® ventilation systems
is a legally protected trademark and technical patent. All rights reserved.

Type E roof exhaust vents

WDQ-E



Description

The type E roof exhaust vents are installed in air exhaust ventilation systems as air exhaust termination units.
The product features an inner water drain.
The flange is made of P30 sheet angles.
Inside the vent, there is a drip tray for removing rain and melt water. The exhaust vent is closed with galvanized steel wire mesh

Available materials — Product code examples
WDQ-E-...-...-...-...- galvanized steel sheet

Product code example
Product code: **WDQ-E - 300 - 300 - 700 - 720**

type
a
b
c
h

Product code examples for standard sizes:
WDQ-E-a-b **WDQ-E-300-300**
Medium-pressure version:
WDQ-E-a-b-S **WDQ-E-300-300-S**

Dimensions

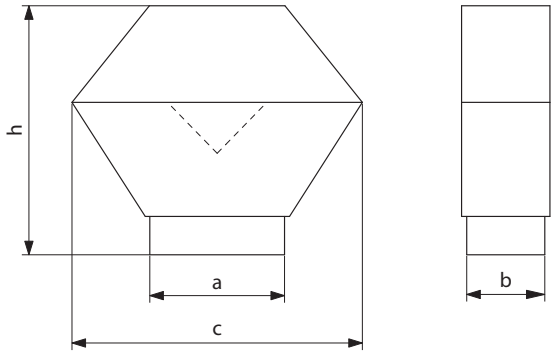

a x b *[mm]*	*c* *[mm]*	*h* *[mm]*
250 x 250	**600**	**660**
300 x 300	**700**	**720**
400 x 400	**900**	**890**
500 x 500	**1100**	**1060**
600 x 600	**1300**	**1200**
800 x 800	**1700**	**1540**
1000 x 1000	**2100**	**1880**
1200 x 1200	**2500**	**2220**

ALNOR® ventilation systems
is a legally protected trademark and technical patent. All rights reserved.

Air intake and exhaust bends

BFQN-135



Dimensions

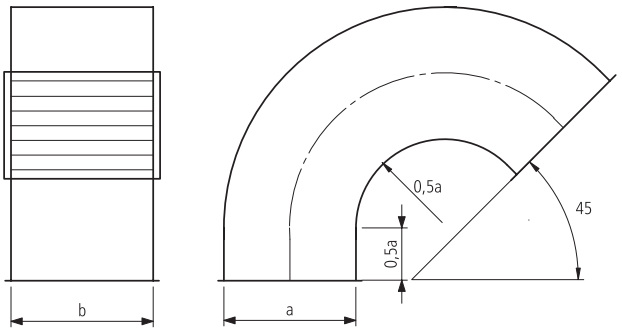

Description

The air intake and exhaust bends are terminations for ventilation ducts. The ends are fitted with sheet angles, and the entire bend is braced by cross-wise ribbing.
The outer end above the roof has louvre blades and a wire mesh inside the bend.

Available materials — Product code examples
BFQN-135-...-... - galvanized steel sheet
BFQN-K-...-... - 1.4301/304 stainless steel sheet

Product code example
Product code: **BFQN-135 - 500 - 300**

type
a
b

Product code examples for standard sizes:
BFQN-135-a-b **BFQN-135-500-400**
Medium-pressure version:
BFQN-135-a-b-S **BFQN-135-500-300-S**

ALNOR® ventilation systems
is a legally protected trademark and technical patent. All rights reserved.

Equipment & accessories

ALNOR reserves the right to modify technical specifications in line with the policy of continuous product improvement.

ALNOR® ventilation systems
is a registered trademark protected by a technical patent. All rights reserved.

Equipment

TECHNICAL INFORMATION

System description

The ALNOR range of equipment and accessories complements ventilation ductwork systems. The wide range of typees and versions allow adapting the silencer solution to virtually all design requirements.

Dimensions

All equipment units are dimensioned to match the ALNOR systems of ducts, fittings and accessories. All sizes are shown in the tables and specifications in the individual Product Data Sheets.

Installation instructions

Ventilation units, such as duct fans, are fastened with self-drilling screws or blind rivets, either of which are driven through the ductwork length overlapping the connection flange inside. Actuators are installed with self-drilling screws to mounts located at damper mechanisms.

Application advantages

The ventilation equipment will unleash the full potential of every ventilation system. It facilitates air flow control and can boost it further with fans and actuators.

Service

We provide warranty and post-warranty servicing of all equipment bought from ALNOR. The ALNOR Process Engineering Department can provide assistance and know-how at all stages of your ventilation system project.

Accessories

All ALNOR ventilation units can be provided with a range of original ALNOR installation, control and automation accessories which enable purchasing and installing a complete HVAC solution for your project.

Marking

ALNOR products carry the Polish conformity mark B for construction products and product codes as shown in the technical specifications listed in this catalogue.

Standards

The common abbreviation ErP (Energy-related Products) applies to various standards for electrical equipment. Ventilation equipment is subject to EU Regulations no. 1253/2014 and 1254/2014. Both Regulations establish a classification of ventilation systems, minimum efficiency ratings, and the unit energy consumption underlying the energy class of equipment. For example: ALNOR heat recovery units meet the requirements of ErP 2018.

Energy labels

All electrical units should be marked with energy labels containing the following information:

I) The supplier's name or trade mark,
II) The supplier's identification of the model,
III) The energy efficiency rating; the tip of the arrow which shows the energy efficiency class letter of the equipment unit is level with the tip of the arrow of the energy efficiency class. The energy efficiency has been rated and specified for moderate climate; ref. Official Journal of the European Union, L 337/34 PL dated 25/11/2014,
IV) The sound power level (LWA) in dB, rounded to the nearest integer,
V) The maximum flow rate in m^3/h, rounded to the nearest integer, with a one-way arrow for OWVS (one-way ventilation systems) or a two arrows in opposite directions for TWVS (two-way ventilation systems).

The calculation method for the UEC (unit energy consumption) and the energy classification are specified in the EU Regulation no. 1254/2014.

Model of the energy label:

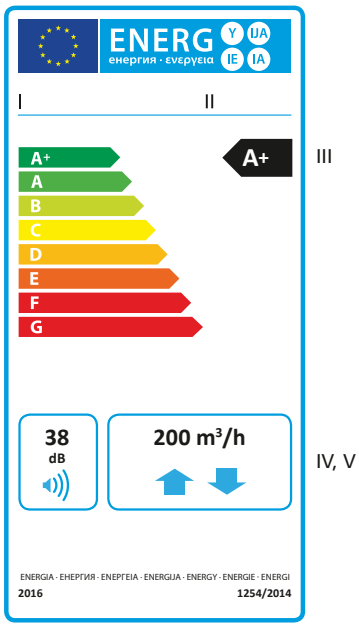

ALNOR® ventilation systems
is a legally protected trademark and technical patent. All rights reserved.

Single-room decentralised heat recovery unit

HRU-WALL

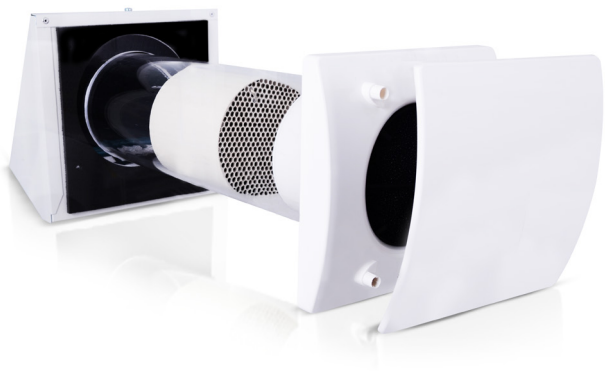

Description

HRU-WALL is a single-room decentralized heat recovery unit for concealed installation. The unit comes with a ceramic heat exchanger which boasts a maximum heat recovery ratio of 90% (the nominal heat recovery ratio is η=74.3% as per EN 13141-8:2011).
The energy-efficient EC fan changes the running direction every 70 seconds to alternate between air supply and air exhaust. Low energy consumption and extremely low operating noise make this heat recovery unit a recommended solution for non-stop operation. The heat recovery unit has three speed levels to choose from, depending on the size of the area and indoor demands.
HRU-WALL-100-25 provides a sufficient air change level in areas up to 19m^2.
HRU-WALL-150-60 provides a sufficient air change level in areas up to 45m^2.

Product code example

Product code: **HRU-WALL - 100 - 25**

type
diameter
capacity

Dimensions

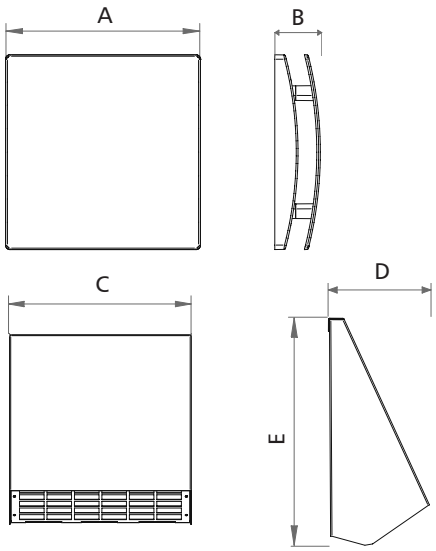

External hood

Type	A [mm]	B [mm]	C [mm]	D [mm]	E [mm]
HRU-WALL-100-25	164	46	205	103	209
HRU-WALL-150-60	218	51	252	114	262

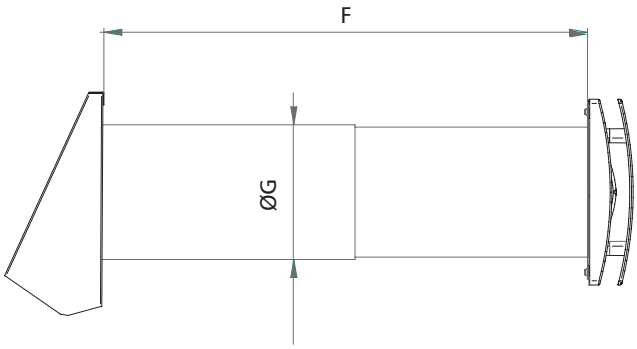

Type	F (mm)	G (mm)
HRU-WALL-100-25	270÷510	108
HRU-WALL-150-60	300÷560	158

ALNOR® ventilation systems
is a legally protected trademark and technical patent. All rights reserved.

Single-room decentralised heat recovery unit

HRU-WALL

Intended use

A system of single-duct decentralized heat recovery units offers the most efficient performance when two identical units are operated in two areas located near one another and connected to a single, common speed controller — HRU-WALL-CONTR-I (or any three-position control switch).
This installation configuration allows synchronizing the alternating air flow direction of both units to have one extract air while the other supplies air. An external sensor (which senses relative air humidity or CO_2 level) can be connected in parallel to control the heat recovery system (to increase fan speed if required).
A system of two HRU-WALL-150 units can supply up to 120 m^3 of fresh air an hour. This rate provides a comfortable and proper air exchange for 4 people.

Example temperature values for the 2nd air supply speed

Indoor temp. (˚C)	*Outdoor temp. (˚C)*	*Air supply temp. (˚C)**	
		HRU-WALL-150	*HRU-WALL-100*
20	0	17.4	16.4
20	-10	16.1	14.6
20	-20	14.8	12.8

* Supply air temperature measured at the 2nd air supply speed

Controller wiring connection diagram

Connection of the HRU-WALL-CONTR-I controller

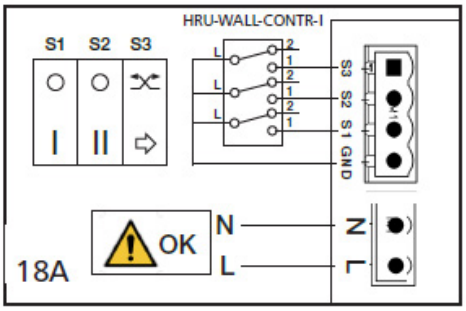

Connection of 2 HRU-WALL units with a single HRU-WALL-CONTR-I controller

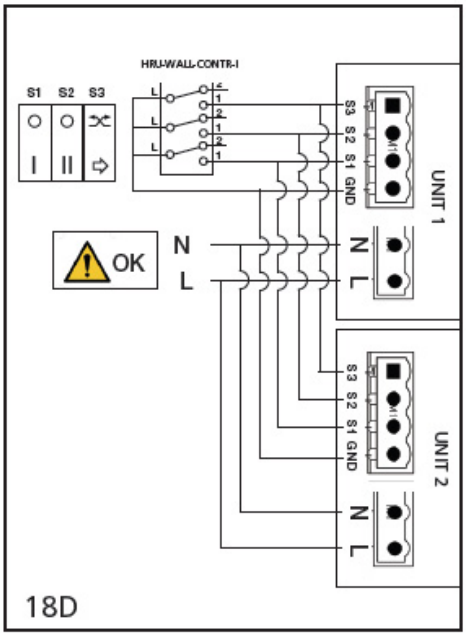

Technical specifications

Type	*Air flow rate (m^3/h)*	*Power (W)*	*Sound pressure (dB(A)) 3 m*	*Ambient temp. (˚C)*	*Weight (kg)*
HRU-WALL-100-25	10/18/25	1,2/1,7/2,6	10/15/29	-20° +50°	2.4
HRU-WALL-150-60	20/40/60	1,4/2,3/3,8	10/18/26	-20° +50°	4.3

Air efficiency measured as per ISO 5801.
Heat recovery efficiency as per EN 13141-8.
Sound level measured as per ISO 3746.

ALNOR® ventilation systems
is a legally protected trademark and technical patent. All rights reserved.

Single-room decentralized heat recovery unit

HRU-WALL

Design of the single-room heat recovery unit

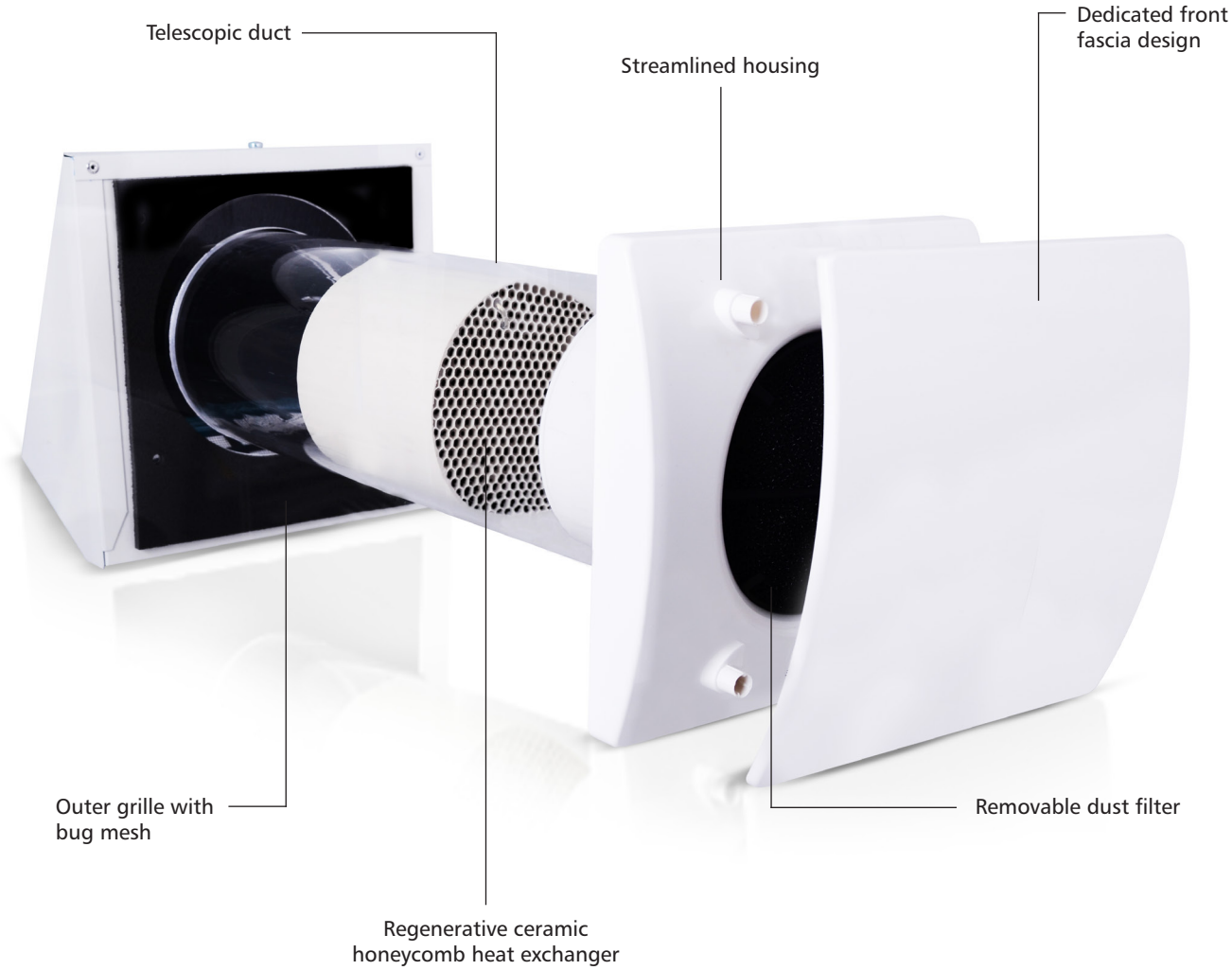

ALNOR® ventilation systems
is a legally protected trademark and technical patent. All rights reserved.

Single-room decentralized heat recovery unit

HRU-WALL

Energy class

Model	*Sound level (dB)*	*Air flow rate (m^3/h)*	*Energy class*
HRU-WALL-100-25	35	10/18/25	A
HRU-WALL-150-60	38	20/40/60	A

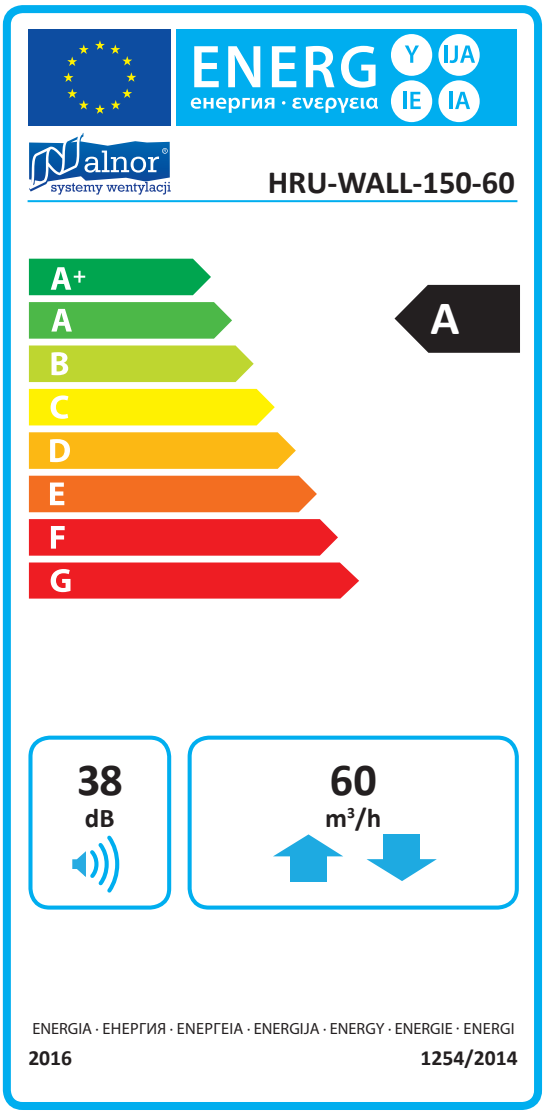

ALNOR® ventilation systems
is a legally protected trademark and technical patent. All rights reserved.

Push-pull heat recovery unit with remote control

HRU-WALL-RC



Description

HRU-WALL-RC is a bidirectional ventilation unit, often described as decentralized or push-pull, with regenerative ceramic heat exchanger. It is intended for single room installation, usually installed in synchronised pairs. The heat exchanger material together with its unique honeycomb structure gives a maximal 82% thermal efficiency ratio (74% acc. to 1254/2014 EU Directive reference measuring point). The casing is made of ABS. The operating principle is analogous to HRU-WALL - unit is working in alternating flow mode, switches the air flow directions every 40-120 seconds (push-pull) and it's equipped with energy efficient EC fan (maximum power consumption is only 6 W). The RC version has several advantages:

- Remote controller with an LCD
- 5 speeds: 20-30-40-50-60 m³/h
- Double filter (inner and outer side)
- Multicolour LED for status indication
- Automatically manages the cycle length in COMFORT mode
- Dirty filter visual indicator
- Boost function - maximum air flow for limited time – 5th speed for 15 minutes
- Integrated humidity sensor – smart humidity control, increases speed if rapid rise of relative humidity is measured
- Anti-frost protection
- Free-cooling - only one direction.

Product code example

Product code: **HRU-WALL-RC - 150 - 60**

type
diameter
capacity

Dimensions

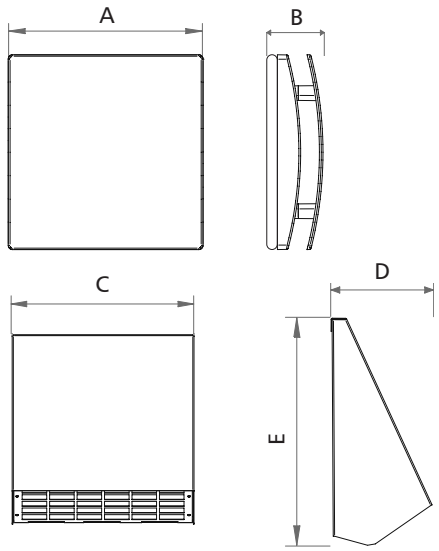

External hood

Type	A [mm]	B [mm]	C [mm]	D [mm]	E [mm]
HRU-WALL-RC-150-60	218	76	252	114	262

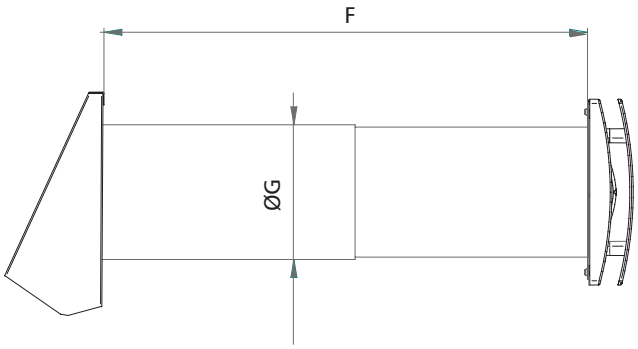

Type	F (mm)	G (mm)
HRU-WALL-RC-150-60	300÷560	158

ALNOR® ventilation systems
is a legally protected trademark and technical patent. All rights reserved.

Push-pull heat recovery unit with remote control

HRU-WALL-RC

Intended use

Most effective method is to use two synchronised units which are installed in closely located rooms. In such configuration one can set the alternating operation on both devices (when one unit extracts air, the other one intakes). Such synchronisation maintains pre-chosen operation modes on all connected devices:

- **COMFORT**
  inversion time varies, optimised for acoustic and thermal comfort
- **EFFICENCY**
  inversion time is fixed, optimised for maximum thermal efficiency

In order to synchronise units a wire connection must be established using 2-pole twisted pair cable. It is possible to connect up to 10 units and control them with one remote. Set of two HRU-WALL-RC-150 can provide up to 120m³ of fresh air per hour. Such amount is enough to create comfortable conditions for 4 people.

Example temperature values for the 3rd air supply speed

Indoor temp. (˚C)	*Outdoor temp. (˚C)*	*Air supply temp. (˚C)**
20	0	17.4
20	-10	16.1
20	-20	14.8

* Supply air temperature measured at the 3rd air supply speed

Contruction

1. Heat exchanger

The ceramic, regenerative heat exchanger is a central and most important part of the unit. It has a honeycomb structure for high thermal efficiency and double-sided air filters.

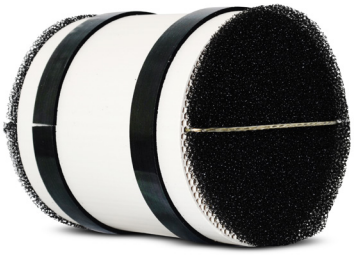

2. Energy efficient EC fan

Due to its advance design and technology it consumes only 6W of power at its peak. Unique design winglet-type impeller, providing enhanced aerodynamic properties, low noise and increased efficiency.High efficient reversible EC motor with integral thermal protection, mounted on sealed for life high quality ball bearings. Designed for continuous reversible running.



3. Front cover

Made of high quality, impact and UV-resistant ABS.



ALNOR® ventilation systems
is a legally protected trademark and technical patent. All rights reserved.

HRU-WALL-RC

4. Telescopic inner pipe
Telescopic pipe adaptable to the wall thickness from 300-560 mm.



5. Outer grille
Outer grille with bug mesh.

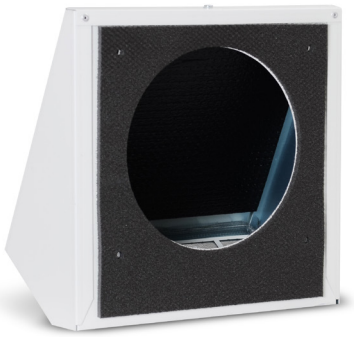

6. Remote control
The unit is supplied with an infrared remote controller as standard, as well as its support base which can be wall mounted. A magnet keeps the controller attached to the base. The controller is equipped with an LCD display to visualise the setting to be transferred to the unit.



ALNOR® ventilation systems
is a legally protected trademark and technical patent. All rights reserved.

Push-pull heat recovery unit with remote control

HRU-WALL-RC

Technical specifications

HRU-WALL-RC-150-60	
Air flow rate [m³/h]	20 / 30 / 40 / 50 / 60
Power [W]	2 / 2,5 / 3,5 / 4,5 / 6
Sound pressure [dB(A)] 3m	10 / 14 / 20 / 24 / 26
Ambient temp. [°C]	-20° +50°
Protection class	IPX4
Frequency [Hz]	50
Voltage [V]	220-240
Weight [kg]	4.40

Air efficiency measured as per ISO 5801.
Heat recovery efficiency as per EN 13141-8.
Sound level measured as per ISO 3746.

Energy class

Model	*Sound level (dB)*	*Air flow rate (m³/h)*	*Energy class*
HRU-WALL-RC-150-60	40	60	A

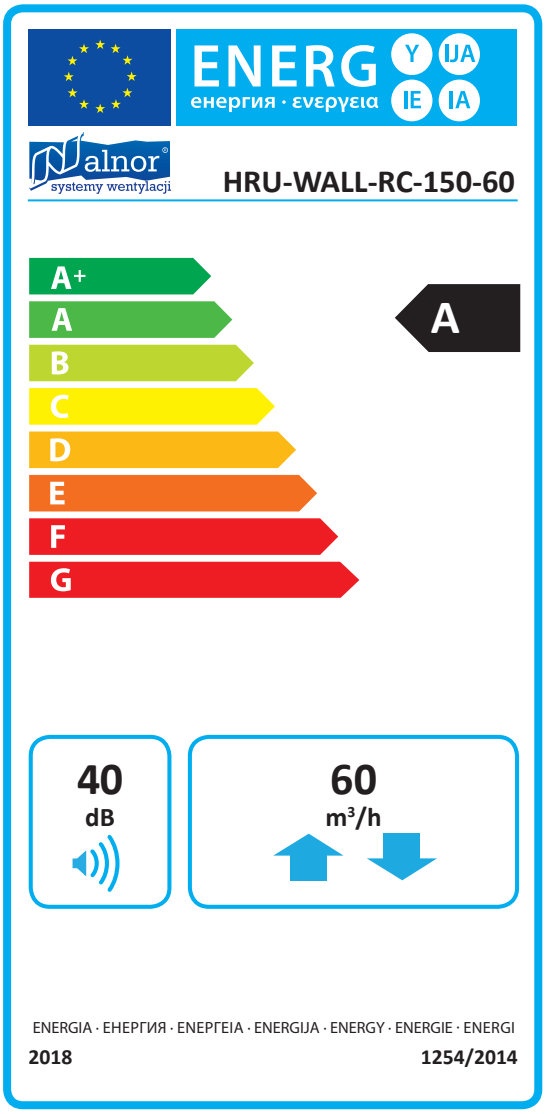

ALNOR® ventilation systems
is a legally protected trademark and technical patent. All rights reserved.

Heat recovery ventilation unit with counterflow exchanger

HRU-PremAIR



Description

Heat recovery ventilation unit HRU-PremAIR is a modern device with 350 / 450 or 500 m3/h air flow @ 100 Pa. Unit is made from cutting edge materials - aluminim heat exchanger and EPP self-supporting casing. Depending on the model, following heat exchangers are used: counterflow aluminium heat exchanger (HRV) or counterflow enthalpy exchanger (ERV).
Enthalpy exchangers in HRU-PremAIR-E series have a polymer membrane that effectively recovers heat and moisture from the extract air. Such membrane works like a membrane in waterproof trekking clothing i.e. it allows water vapour to pass through, but not liquid water and air. The enthalpy exchanger also blocks the transfer of odours, bacteria and spores.
The exchanger material, is needless to say, primarily optimized for maximum heat recovery efficiency.
The device operation is controlled by an advanced PCB with wireless communication between control panels and sensors. In addition, the HRU-PremAIR can be connected to the Internet and controlled by an mobile application.

cool, temperate climate
CERTIFIED COMPONENT
Passive House Institute

HRU-PremAIR-450 is certified by Passive House Institute and can be used as a certified component in passive houses.

Available materials:

HRU-PremAIR-350 - aluminium counterflow heat exchanger
HRU-PremAIR-350E - counterflow enthalpy exchanger (heat and moisture recovery)
HRU-PremAIR-450 - aluminium counterflow heat exchanger
HRU-PremAIR-450E - counterflow enthalpy exchanger (heat and moisture recovery)
HRU-PremAIR-500 - aluminium counterflow heat exchanger

Dimensions

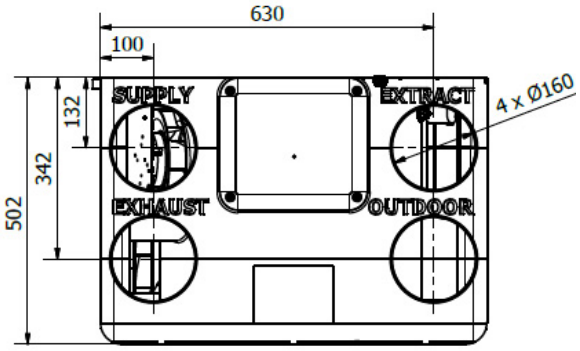

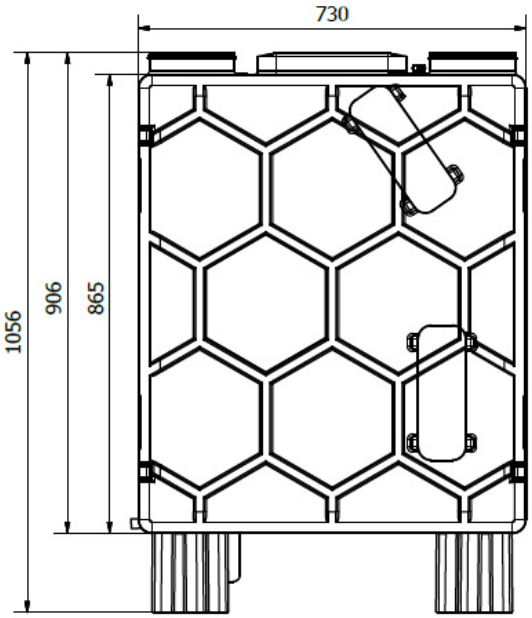

ALNOR® ventilation systems
is a legally protected trademark and technical patent. All rights reserved.

Heat recovery ventilation unit with counterflow exchanger

HRU-PremAIR

Performance

Key performance features:

- Heat recovery:
  - HRU-PremAIR-350 - up to 90,3%
  - HRU-PremAIR-350E - up to 91.2%
  - HRU-PremAIR-450 - up to 90,3%
  - HRU-PremAIR-450E - up to 91,2%
  - HRU-PremAIR-500 - up to 82,6%
- Entalphy exchangers with antimirobial properties of the membrane, sesistant against mold and bacteria
- Hi-tech modern casing made of Expanded Polypropylene - EPP
- High mechanical resistance
- High thermal and acoustic insulation
- Modulated by-pass
- Free-cooling functions – also referred as Passive Cooling (no energy is needed) or Night Cooling (mostly happens during night), can be used to cool a building with outdoor air, when the room temperature is higher than the outside temperature
- Free-heating functions - also referred as Passive Heating (no energy is needed), can be used to heat a building with outdoor air, when the room temperature is lower than the outside temperature
- Performance tested according to EN 13141-7 standard
- Complies with ErP2018
- Wall mounting racks and feet included
- Replaceable duct connections
- Wireless control through mobile application or web browser
- Remote control possible by any CO_2 or RH wireless sensor
- Light weight construction – only 32 kg!
- POLISH product

Design

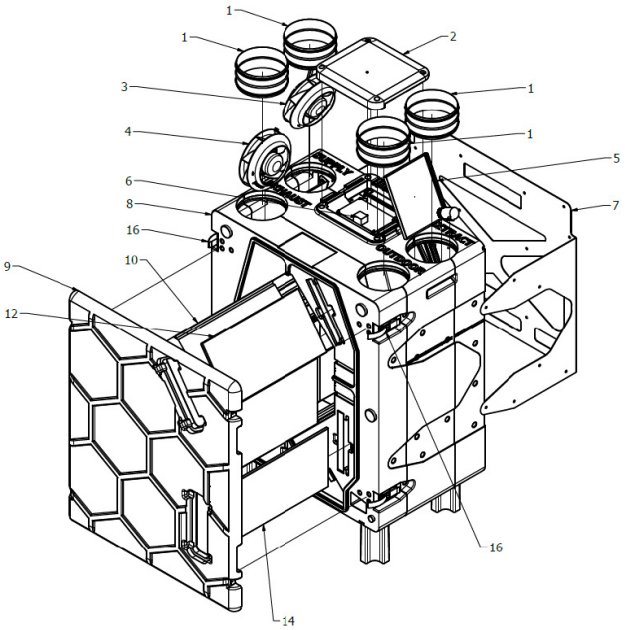

1. NSL connector (4pcs.)	9. Front cover
2. Control circuit cover	10. Heat exchanger
3. Supply fan	11. Extract filter cover
4. Extract fan	12. Extract filter G4
5. Bypass damper	13. Supply filter cover
6. Control circuit	14. Supply filter G4
7. Handling chassis	15. Mounting foot (4pcs.)
8. HRU housing	16. Clamp (4pcs.)

ALNOR® ventilation systems
is a legally protected trademark and technical patent. All rights reserved.

Heat recovery ventilation unit with counterflow exchanger

HRU-PremAIR

Technical data

	HRU-PremAIR-350	HRU-PremAIR-350E	HRU-PremAIR-450	HRU-PremAIR-450E	HRU-PremAIR-500
Maximal efficiency %[1]	90,3	91,2	90,3	91,2	82,6
Efficiency % (acc. 1254/2014)[2]	85,5	84,7	85,2	82,1	81,5
Heat exchanger	counterflow, aluminium	counterflow, enthalpy	counterflow, aluminium	counterflow, enthalpy	counterflow, aluminium
Air flow (m^3/h)	350 @ 100 Pa	350 @ 100 Pa	450 @ 100 Pa	450 @ 100 Pa	500 @ 100 Pa
Voltage (V/Hz)	230 / 50	230 / 50	230 / 50	230 / 50	230 / 50
Maximum power consumption (W)	150	150	220	270	220
Sound power level L_{WA}(dB (A))	49	49	51	51	49
Weight (kg)	35	35	35	35	35
Filters	ISO Coarse 70% (ISO ePM1 55% optional)	ISO Coarse 70% (ISO ePM1 55% optional)	ISO Coarse 70% (ISO ePM1 55% optional)	ISO Coarse 70% (ISO ePM1 55% optional)	ISO Coarse 70% (ISO ePM1 55% optional)

[1] Maximal thermal efficiency acc. to EN13141-7 at minimum air flow
[2] Thermal efficiency in reference point acc. to EN 13141-7, in compliance with UE 1254/2014

Performance curve HRU-PremAIR-350

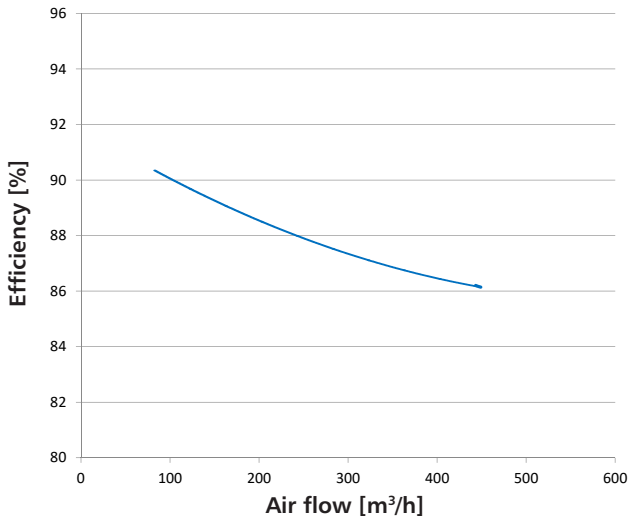

Performance curve HRU-PremAIR-450

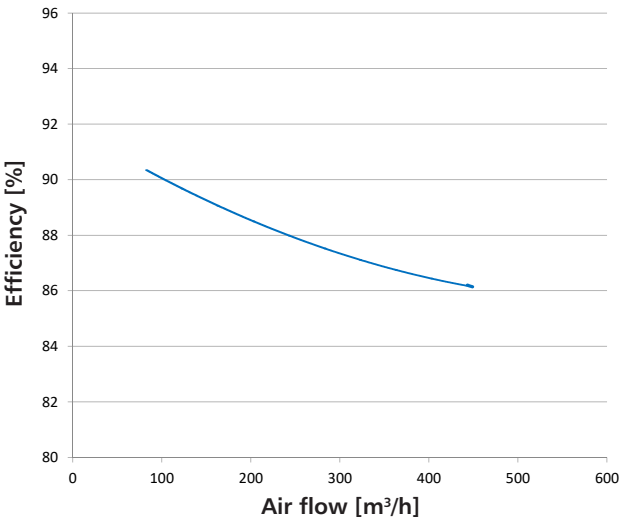

Performance curve HRU-PremAIR-500

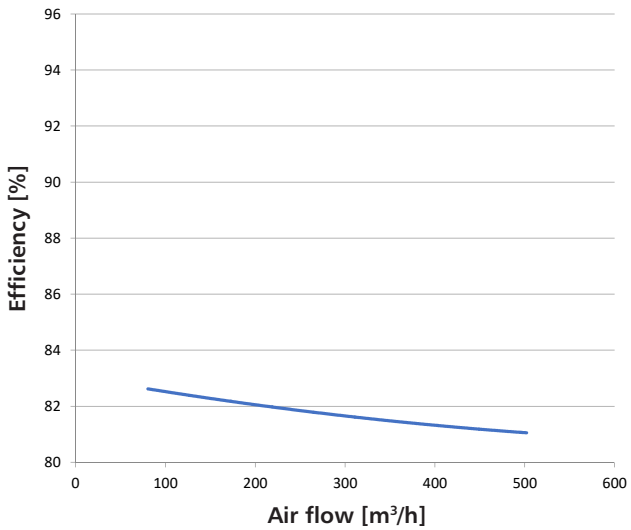

Performance curve - Heat (—) and moisture(—) recovery HRU-PremAIR-350E / HRU-PremAIR-450E

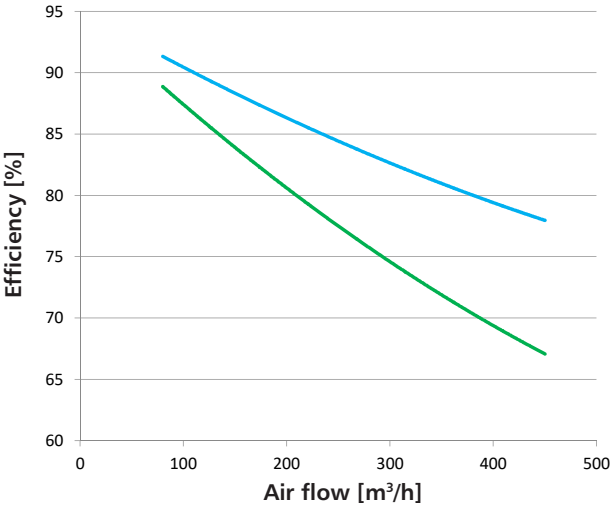

ALNOR® ventilation systems
is a legally protected trademark and technical patent. All rights reserved.

Heat recovery ventilation unit with counterflow exchanger

HRU-PremAIR

Air flow HRU-PremAir-350 / HRU-PremAir-350E

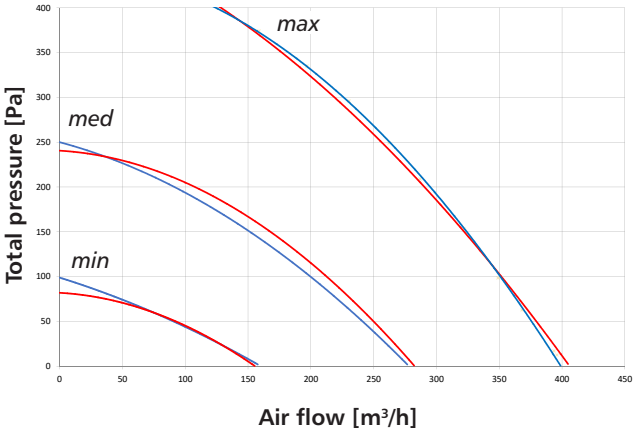

Air flow HRU-PremAir-450 / HRU-PremAir-450E

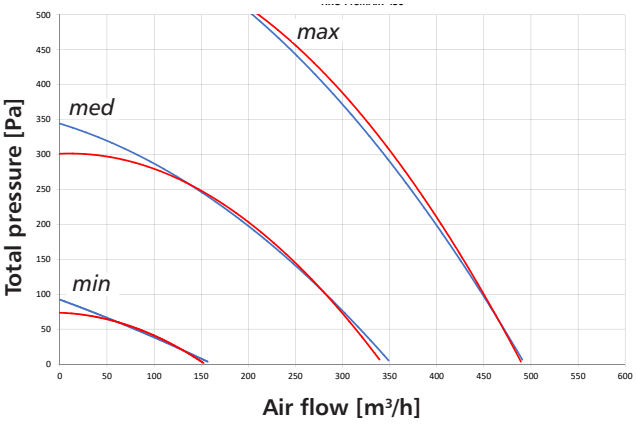

Air flow HRU-PremAir-500

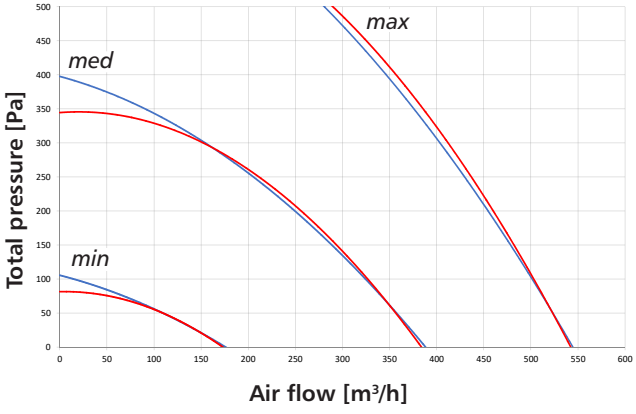

ALNOR® ventilation systems
is a legally protected trademark and technical patent. All rights reserved.

Accessories

Filter HRQ-PremAIR-FILT-G4 (standard)

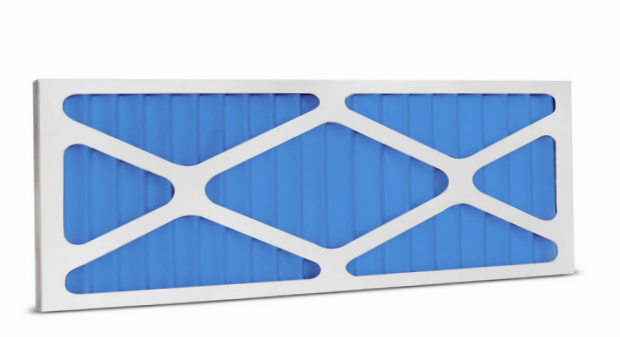

G4 pleated panel filters creates a larger media surface area for air filtration and ensures lower pressure drops. Filters are classified as in the ISO Coarse 70% according to ISO 16890 standards.

Code	Filter class	Dimensionsr [mm]
HRQ-PremAIR-FILT-G4	ISO Coarse 70 % (old G4)	423x223x23

Filter HRQ-PremAIR-FILT-F7 (optional)

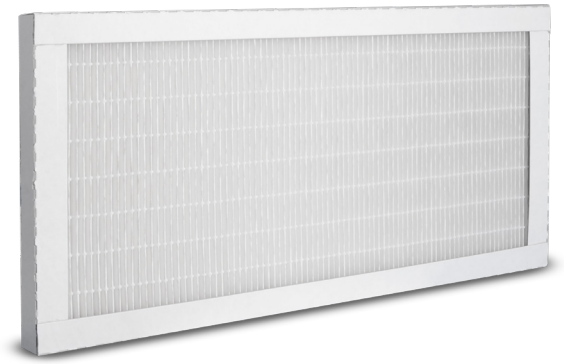

F7 is classified as a fine filter according to EN 779:2012 norm and as ePM_1 55% in accordance with new standard ISO 16890.

Code	Filter class	Dimensions [mm]
HRQ-PremAir-FILT-F7	ISO ePM1 55% (old F7)	423x223x25

Controller HRQ-PremAIR-BUT-LM11 (standard)



Standard (included) wireless 4-button controller allows to choose from 4 operating modes: Away, Home, Timer, Party. Range: 30 m (inside dwelling, 100 m in open space, additional antenna available).

Code	Power supply	Dimensions [mm]
HRQ-PremAIR-BUT-LM11	Battery CR2032	84x84x15

Controller HRQ-PremAIR-BUT-LM04 (optional)



Optional wireless 4-button controller allows to choose from 4 operating modes: Away, Home, Timer, Auto.
Range: 30 m (inside dwelling, 100 m in open space, additional antenna available).

Code	Power supply	Dimensons [mm]
HRQ-PremAIR-BUT-LM04	Battery CR2032	84x84x15

ALNOR® ventilation systems
is a legally protected trademark and technical patent. All rights reserved.

Heat recovery ventilation unit with counterflow exchanger

HRU-PremAIR

HRQ-PremAIR-SENS-CO2 (optional)



Wireless, wall mounted CO2 sensor measures the dioxide level in the room (PPM). Sensor works as a unit controller and indicates the current status by means of a multicolour LED. Up to 20 wireless devices can be connected to a single ventilation unit.
Range: 30 m (inside dwelling, 100 m in open space, additional antenna available).

Code	*Power supply*	*Dimensions [mm]*
HRQ-PremAIR-SENS-CO2	230V	100x100x25

HRQ-PremAIR-SENS-RH (optional)



Wireless relative humidity sensor, wall mounted. Sensor works as a unit controller and indicates the current operation mode by means of a multicolour LED. Up to 20 wireless devices can be connected to a single ventilation unit.
Range: 30 m (inside dwelling, 100 m in open space, additional antenna available).

Code	*Power supply*	*Dimensions [mm]*
HRQ-PremAIR-SENS-RH	2x AA	100x100x25

HRQ-PremAIR-SENS-GATE (optional)



Internet gate allows to connect the PremAIR unit to Internet and control it through a mobile application.

Code	*Power supply*	*Dimensions [mm]*
HRQ-PremAIR-GATE	230V	80x105x20

ALNOR® ventilation systems
is a legally protected trademark and technical patent. All rights reserved.

Heat recovery ventilation unit with counterflow exchanger

HRU-PremAIR

Mobile application HRU-PremAIR

Mobile application for controlling a home ventilation unit HRU-PremAIR-450 by ALNOR.
It allows to monitor and control the unit via local network and Internet as well:

- Mode selection (Away, Home, Party, Boost, Auto and Standby)
- Temperature readouts
- Registering and displaying remote CO_2 and RH sensors readouts
- Fans efficiencies
- Defrost mode
- By-pass mode
- Filters conditions

Available for download in Google Play and App Store: PremAIR
Also via web browser: https://premair.alnor.pl/

Screen shot:



ALNOR® ventilation systems
is a legally protected trademark and technical patent. All rights reserved.

Heat recovery ventilation unit with counterflow exchanger

HRU-PremAIR

Energy class

Model	Sound level L_{WA} dB(A)* [dB]	Air flow rate [m³/h]	Energy class			
			Manual control	Clock control	Central demand control (1 sensor)	Local demand control (2 sensor)
HRU-PremAIR-350	49	350	A	A	A	A+
HRU-PremAIR-350E	49	350	A	A	A	A+
HRU-PremAIR-450	51	450	A	A	A	A
HRU-PremAIR-450E	51	450	B	A	A	A
HRU-PremAIR-500	49	500	A	A	A	A

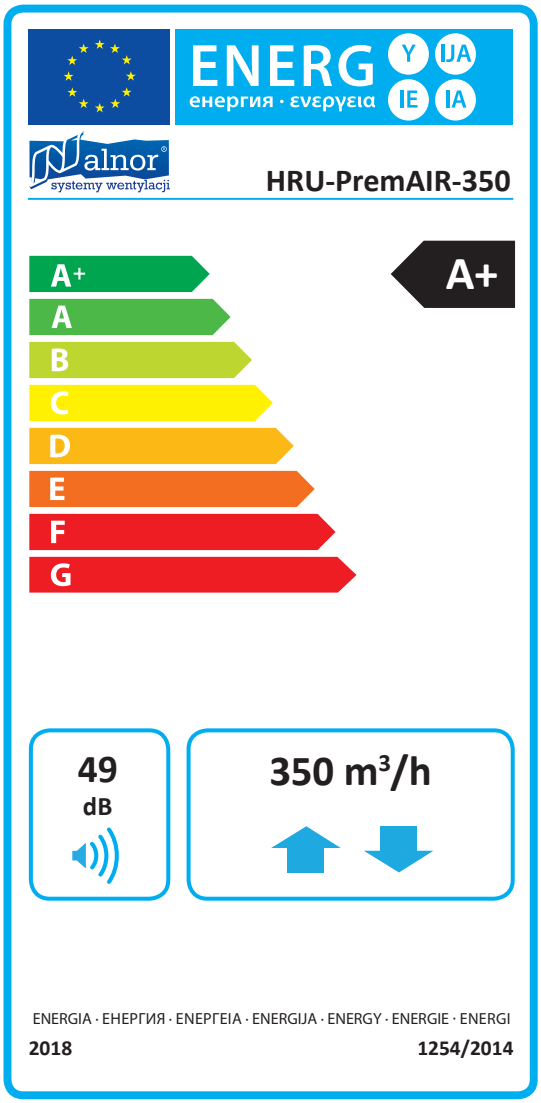

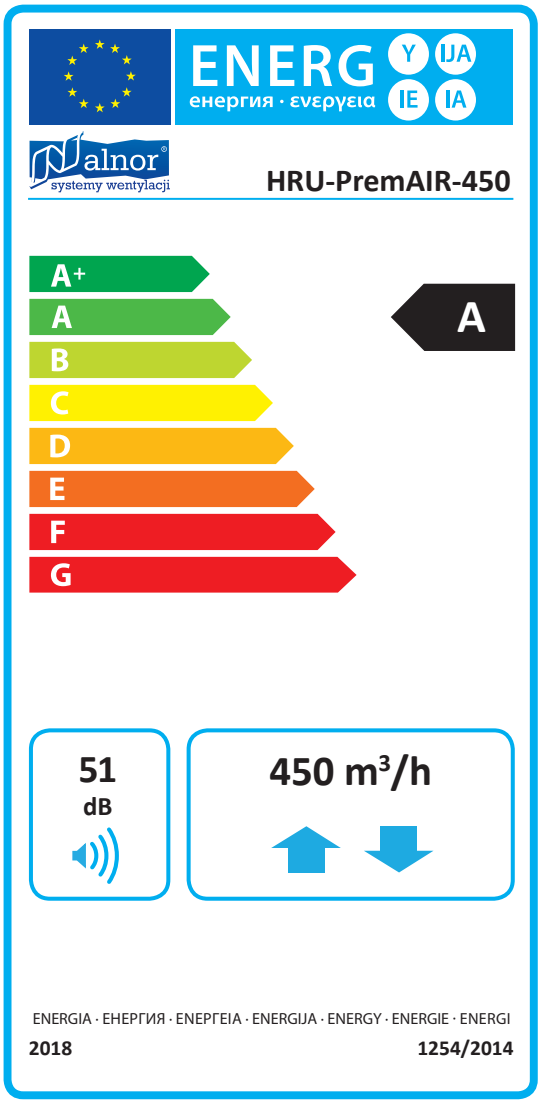

ALNOR® ventilation systems
is a legally protected trademark and technical patent. All rights reserved.

Duct electric heater for HRU-PremAIR RAHU

HRQ-PremAIR-HDE /-HDE-CO1



Dimensions

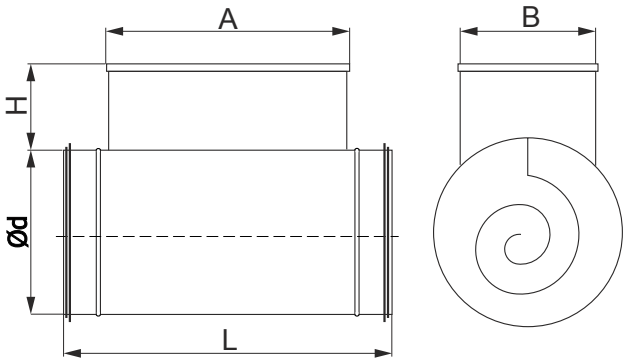

Type	Ød [mm]	A [mm]	B [mm]	H [mm]	L [mm]
HRQ-PremAIR-HDE-160-1,5	160	280	120	110	380
HRQ-PremAIR-HDE-CO1-160-2,5	160	280	120	110	420

Description

HRQ-PremAIR-HDE and HRQ-PremAIR-HDE-CO1 round duct electric heaters are designed for ventilation systems with HRU-PremAIR residential air handling unit to use as pre-heaters - serve as additional (optional) frost protection for the heat exchanger and therefore allow the unit to work in a balanced way even during heavy winter conditions.
The casing is made from galvanised steel sheet, the heating elements are made from stainless steel. Heaters are equipped in a two-stage overheat protection. The first thermostat is an automatic-reset temperature limiter set to trip at +60˚C. The other thermostat is a manual temperature limiter set to trip at +90˚C (once tripped, this device needs to be reset by hand). Ducted electric heaters feature EPDM gaskets at the male connection ends and a 3m long power cord with a dedicated plug for HRU-PremAIR units. HRQ-PremAIR-HDE-CO1 has additionally a single contractor.



Detailed installation instructions are described in the manual.

Available versions:
HRQ-PremAIR-HDE-160-1,5 - heater with Ø160 connection, heating capacity 1,5kW, powered and controlled by the HRU-PremAir unit
HRQ-PremAIR-HDE-CO1-160-2,5 - heater with Ø160 connection, heating capacity 2,5kW, single contractor, controlled by the HRU-PremAir unit, powered from the mains

Product code example
Product code: HRQ-PremAIR-HDE-**160 - 1,5**

type
power factor

Technical data

Type	Power [W]	Voltage [V]	No. of heating elements	No. of contractors
HRQ-PremAIR-HDE-160-1,5	1500	230	3	0
HRQ-PremAIR-HDE-CO1-160-2,5	2500	230	5	1

ALNOR® ventilation systems
is a legally protected trademark and technical patent. All rights reserved.

Duct electric heater for HRU-PremAIR RAHU

HRQ-PremAIR-HDE /-HDE-CO1

Connection diagrams

Wiring diagram for HRQ-PremAIR-HDE

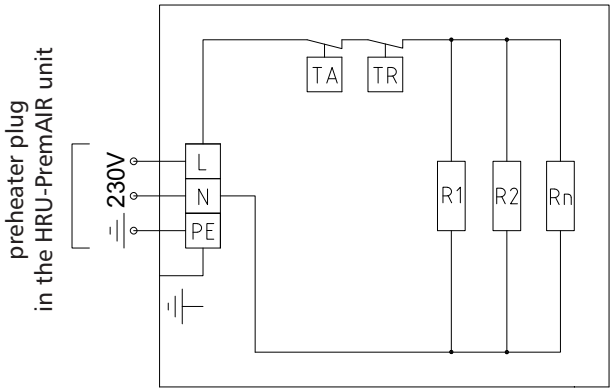

L, N - 1x230V, 50Hz single phase power supply
PE - protective conductor
R1, R2...Rn - heating elements
TA - overheating protection at +60°C (auto restart)
TR - overheating protection at +90°C (manual restart)

Wiring diagram for HRQ-PremAIR-HDE-CO

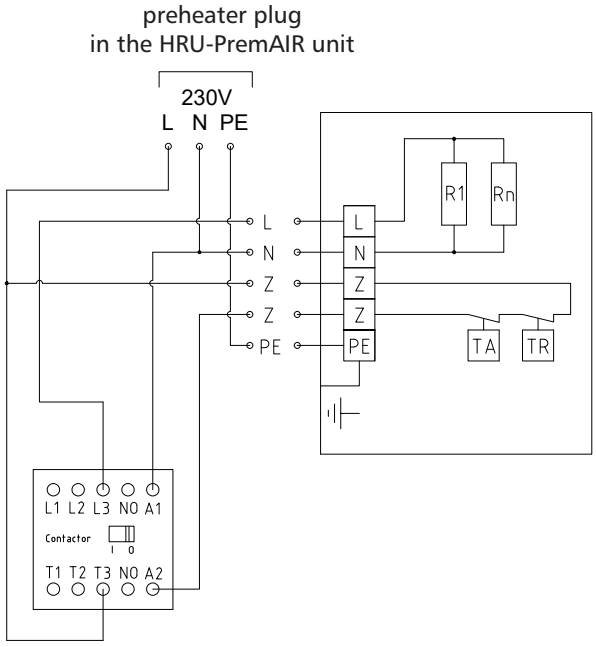

L, N - 1x230V, 50Hz single phase power supply
PE - protective conductor
R1, R2...Rn - heating elements
Z-Z - overheating protection terminals
TA - overheating protection at +60°C (auto restart)
TR - overheating protection at +90°C (manual restart)

Connection drawing

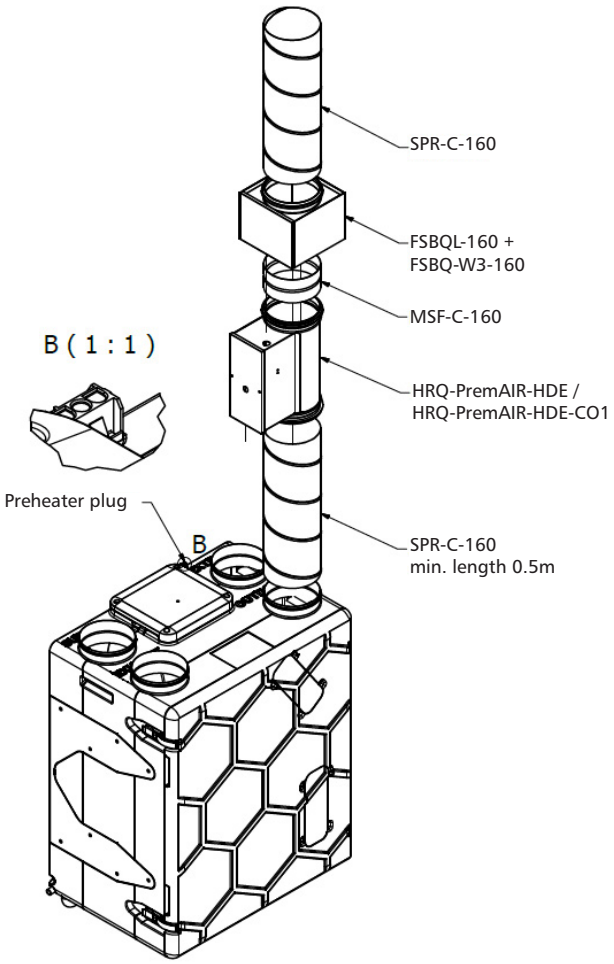

Available combinations



HRQ-PremAIR-HDE-160-1,5

+



HRU-PremAIR-450



HRQ-PremAIR-HDE-CO1-160-2,5

+



HRU-PremAIR-450

ALNOR® ventilation systems
is a legally protected trademark and technical patent. All rights reserved.

Heat recovery units

HRU-MinistAir-W-250



Description

HRU-MinistAir-W-250 is the smallest heat recovery unit in the range of MinistAIR products. With a total air supply output of 220 m³/h, the unit can be installed in small indoor areas which will benefit from a compact footprint and low weight of the product.

Key performance features:

- Maximum heat recovery ratio 85.8%, tested as per EN 308 by TÜV SÜD
- Plastic counter-flow heat exchanger
- Automatic air flow bypass
- Freeze protection
- BMS connectivity (via Modbus)
- Preheater and secondary heater control connectivity
- Programmable week control timer
- Filter clogging monitor
- Class G4 filters in standard (class F7 filters available on request)
- Supported sensor typees: CO_2, RH, and pressure switch
- Wall-mounted or free-standing
- Metal duct connections with EPDM gaskets for air tightness class D
- EBM PAPST energy-efficient fans

Sterowanie

The HRU-MinistAir-W-250 ventilation unit is equipped with a manual controller, which allows to:

- read the unit parameters,
- change recuperator air flow,
- set the device's weekly schedule,
- control optional after-heater,
- verify the condition of filters,
- child lock,
- and many others.

Dimensions

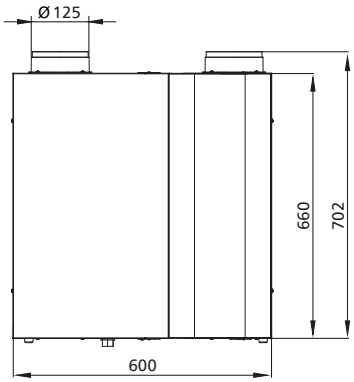

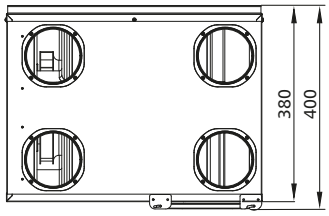

Design

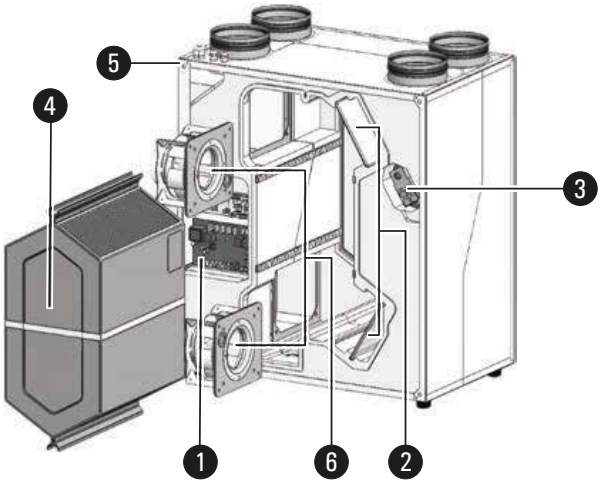

1. Control
2. Air supply & exhaust filters
3. Damper actuator
4. Counter-flow heat exchanger
5. Housing
6. Air exhaust & supply fans

ALNOR® ventilation systems
is a legally protected trademark and technical patent. All rights reserved.

Heat recovery units

HRU-MinistAir-W-250

Technical specifications

	HRU-MinistAir-W-250
Air flow rate (m^3/h)*	220
Rated power supply (V/Hz/Ph)	230 / 50 / ≈ 1
Maximum power consumption (W)	112
Maximum sound pressure level (dB (A))**	46
Weight (kg)	24
Filters	Class G4 filter as per EN 779 (class F filter available on request)

* The static pressure is 100 Pa.
** Measured 1 m away from the unit.

Performance curve

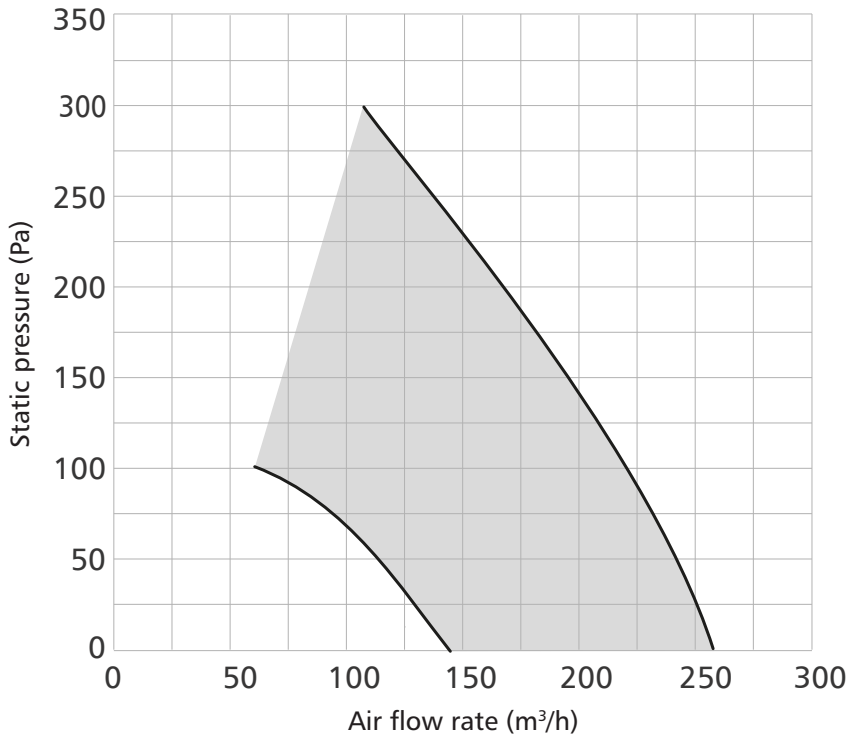

ALNOR® ventilation systems
is a legally protected trademark and technical patent. All rights reserved.

HRU-MinistAir-W-250

Technical specifications

Sound level chart

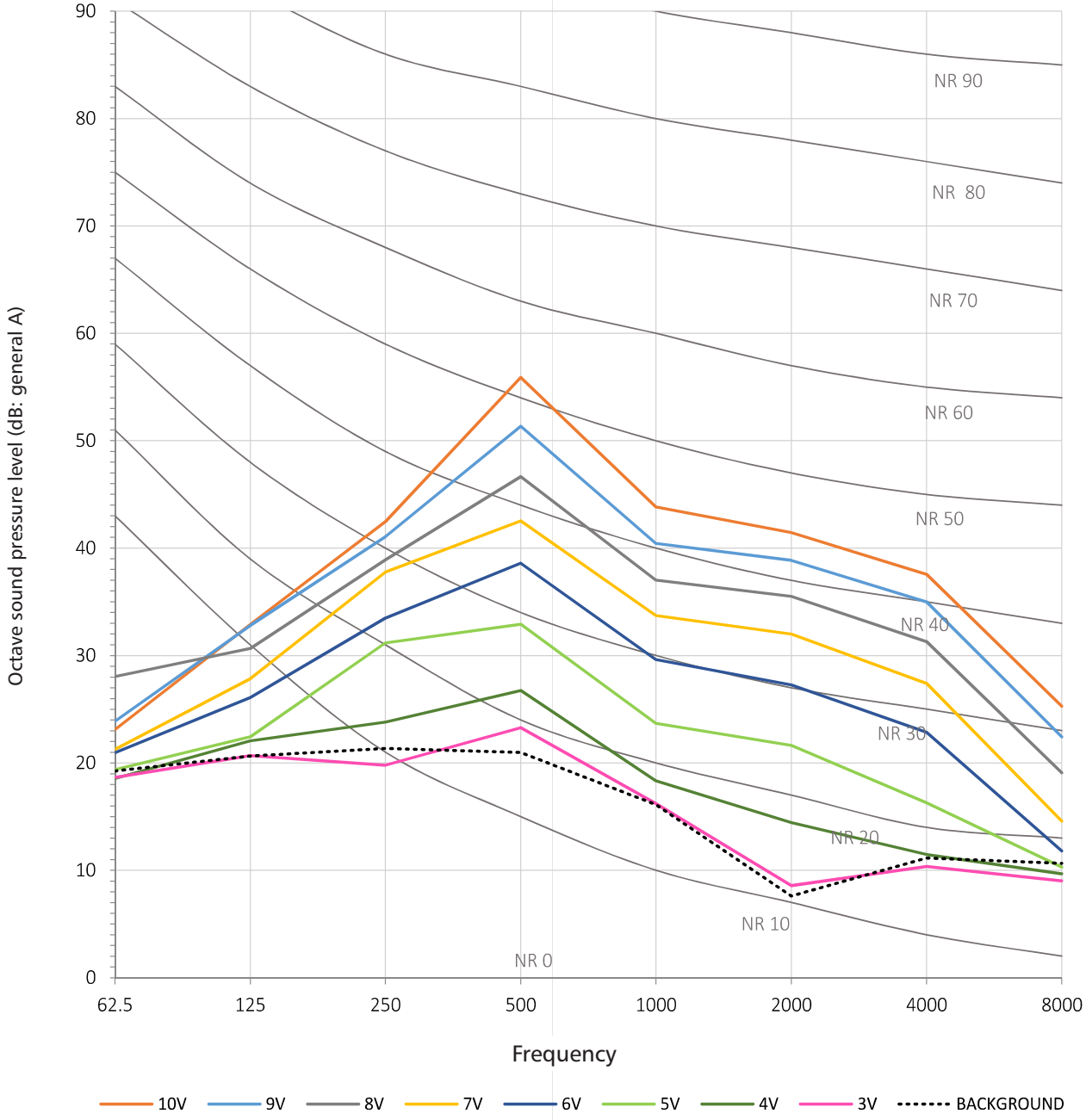

ALNOR® ventilation systems
is a legally protected trademark and technical patent. All rights reserved.

Heat recovery units

HRU-MinistAir-W-250

Technical specifications

The air tightness was tested per EN 308.

The air leak rate was measured at an air flow rate of 221 m³/h and an air pressure of 100 Pa.
The following table lists the internal and external air leak rates and percentage vs. the overall air flow rate:

Test No.	P_{stst} (Pa)	*Inner air leak*		*Outer air leak*	
		Air leak rate (m³/h)	Percentage ratio (%)	Air leak rate (m³/h)	Percentage ratio (%)
1	-400	2.4	1.1	–	–
2	-300	1.9	0.8	2.8	1.3
3	-250	1.6	0.7	–	–
4	-200	1.3	0.6	2.1	0.9
5	-100	0.7	0.3	1.3	0.6
6	-50	0.4	0.2	0.7	0.3
7	0	0.0	0.0	0.0	0.0
8	50	0.3	0.2	0.7	0.3
9	100	0.6	0.3	1.2	0.5
10	200	1.2	0.5	2.0	0.9
11	250	1.4	0.6	–	–
12	300	1.7	0.7	2.7	1.2
13	400	2.1	0.9	–	–

The thermodynamic test was completed as per EN 308.

The following temperature coefficients were measured for the HRU-MinistAir-W-250 heat recovery unit:

			4 V	6V	8V	10 V
Supply air	q_{m2}	[m³/h]	40	113	151	226
Exhaust air	q_{m1}	[m³/h]	40	114	153	230
Static pressure (supply)		[Pa]	49	50	96	98
Static pressure (exhaust)		[Pa]	48	47	95	96
Supply temp. recovery ratio	$eta_{t,sup}$	[%]	87	85	83	80
Exhaust temp. recovery ratio	$eta_{t,eha}$	[%]	71	76	75	74
Mean temp. recovery ratio	$eta_{t,epb}$	[%]	79	80	79	77

ALNOR® ventilation systems
is a legally protected trademark and technical patent. All rights reserved.

HRU-MinistAir-W-250

Energy class

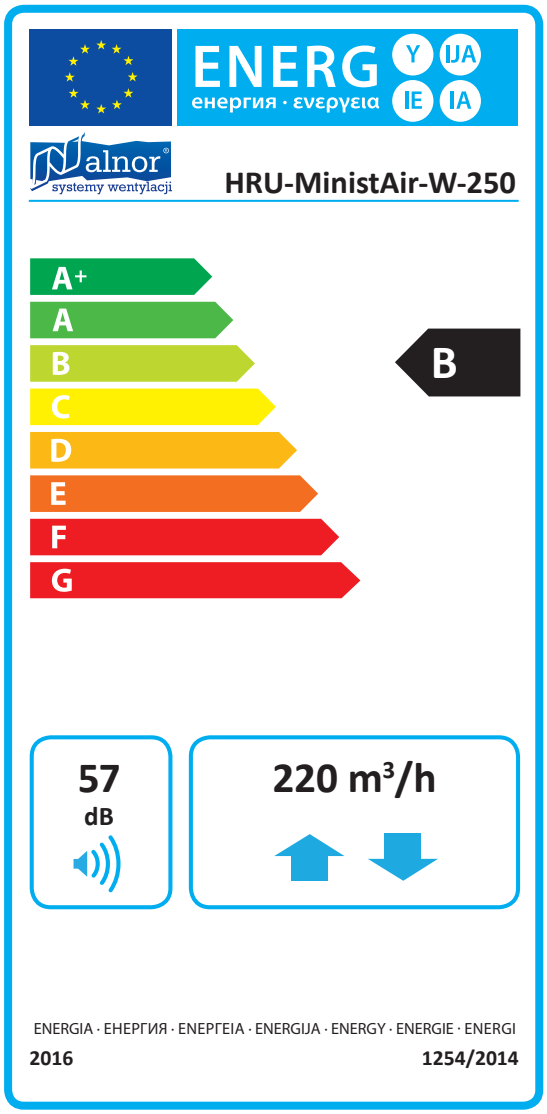

ALNOR® ventilation systems
is a legally protected trademark and technical patent. All rights reserved.

Heat recovery units

HRU-MinistAir-W-450



Description

The HRU-MinistAir-W-450 heat recovery unit is designed for single-family houses up to 200 m^2 in usable floor area.

Key performance features:

- Maximum heat recovery ratio 90.5%, tested as per EN 308 by TÜV SÜD
- Plastic counter-flow heat exchanger
- Automatic air flow bypass
- Freeze protection
- Modbus connectivity: all unit control functions can be managed via a PC or a central automation system
- Preheater and secondary heater control connectivity
- Programmable week control timer
- Filter clogging indicator
- Class EU4 filters in standard (class F7 filters available on request)
- Supported sensor typees: CO_2, RH, and a pressure switch
- Wall-mounted or free-standing
- Various duct connection versions available: EA, SA, OA, RA
- Metal duct connections with EPDM gaskets for air tightness class D
- EBM PAPST energy-efficient fans

Sterowanie

The HRU-MinistAir-W-450 ventilation unit is equipped with a manual controller, which allows to:

- read the unit parameters,
- change recuperator air flow,
- set the device's weekly schedule,
- control optional after-heater,
- verify the condition of filters,
- child lock,
- and many others.

Dimensions

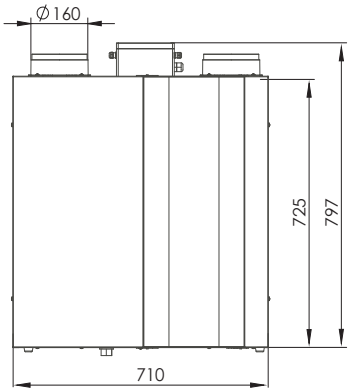

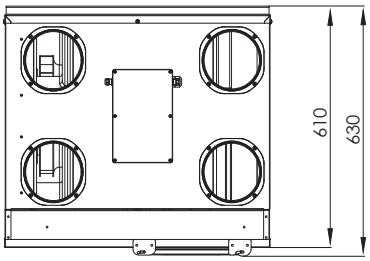

All dimensions are in mm.

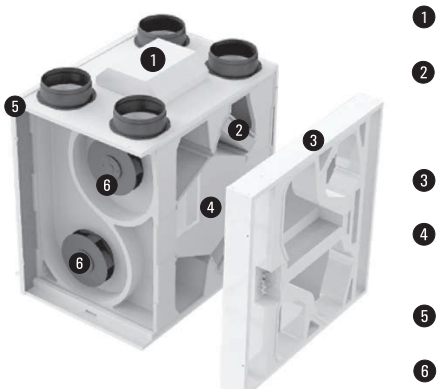

ALNOR® systemy wentylacji
jest prawnie chronionym znakiem i technicznym patentem. Prawo do zmian zastrzeżone.

Heat recovery units

HRU-MinistAir-W-450

Technical specifications

	HRU-MinistAir-W-450
Air flow rate (m³/h)*	470
Rated power supply (V/Hz/Ph)	230 / 50 / ≈
Maximum power consumption (W)	180
Maximum current consumption (A)	1.54
Maximum sound pressure level (dB (A))**	48
Weight (kg)	41
Filters	Class G4 filter as per EN 779 (class F filter available on request)

* The static pressure is 0 Pa.
** Measured at 1.5 m away from the unit.

The total power consumption is measured as the consumption by two (air supply and air exhaust) fans.
The Specific Fan Power is expressed in kW/m³/s as per EN 13779 (Ventilation for non-residential buildings).

SFP: Specific Fan Power

$$SFP = \frac{\text{Total powet consumption (kW)}}{\text{Airflow (m}^3\text{/s)}}$$

Performance curve

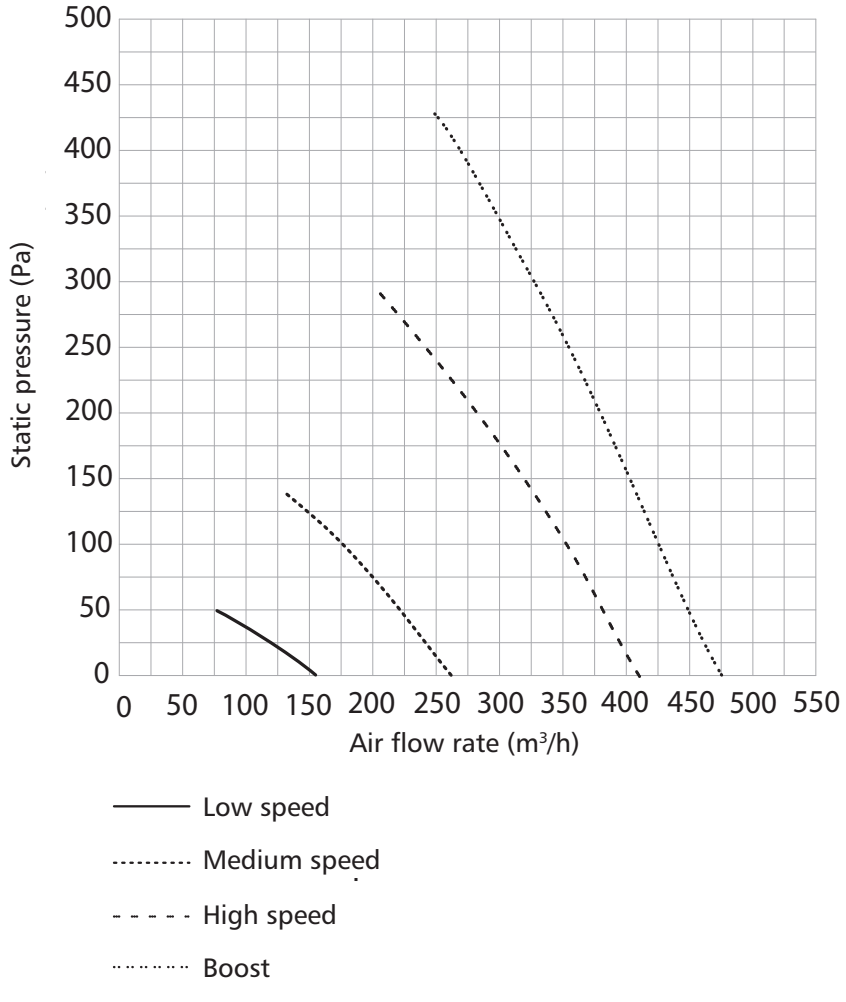

ALNOR® ventilation systems
is a legally protected trademark and technical patent. All rights reserved.

Heat recovery units

HRU-MinistAir-W-450

Technical specifications

Sound level chart

Speed	*Sound pressure*							
Hz	63	125	250	500	1000	2000	4000	8000
Speed boost	24	30	48	52	50	47	41	40
High speed	21	32	47	51	47	45	39	37
Medium speed	18	28	46	45	38	38	32	27
Low speed	16	28	34	36	30	29	20	14

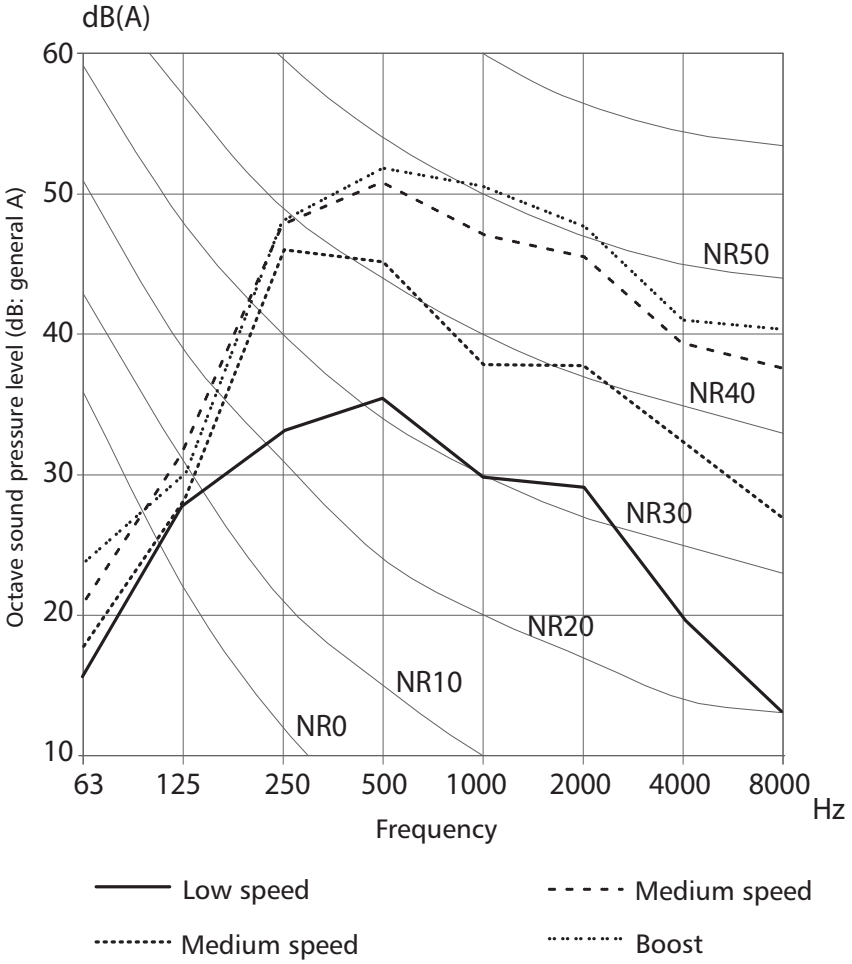

ALNOR® ventilation systems
is a legally protected trademark and technical patent. All rights reserved.

HRU-MinistAir-W-450

Technical specifications

Air tightness test

The nominal air flow rate of the unit is 400m³/h.
The following table lists the internal and external air leak rates and percentage vs. the overall air flow rate:

Test No.	P_{stst} (Pa)	*Inner air leak*		*Outer air leak*	
		Air leak rate (m³/h)	Percentage ratio (%)	Air leak rate (m³/h)	Percentage ratio (%)
1	-300	1.8	0.4	2.1	0.5
2	-250	1.6	0.4	1.9	0.5
3	-200	1.3	0.3	1.7	0.4
4	-100	0.7	0.2	1.1	0.3
5	-50	0.4	0.1	0.8	0.2
6	0	0.0	0.0	0.0	0.0
7	50	0.3	0.1	0.8	0.2
8	100	0.6	0.2	1.1	0.3
9	200	1.2	0.3	1.7	0.4
10	250	1.5	0.4	2.0	0.5
11	300	1.7	0.4	2.2	0.5

Thermodynamic test

The following temperature coefficients were measured for the HRU-MinistAir-W-450 heat recovery unit:

Air supply rate		[m³/h]	71.0	197.0	320.0	378.0
Air exhaust rate		[m³/h]	76.0	217.0	344	426.0
Temp. coeff. (air supply)	eta_{tsup}	[%]	94.7	90.3	86.5	86.8
Humidity coeff. (air supply)	eta_{tsup}	[%]	–	–	–	–
Temp. coeff. (air exhaust)	eta_{teha}	[%]	80.3	82.1	80.9	77.9
Humidity coeff. (air exhaust)	eta_{teha}	[%]	–	–	–	–
Mean temp. coefficient	eta_{tepb}	[%]	87.5	86.2	83.7	82.4

ALNOR® ventilation systems
is a legally protected trademark and technical patent. All rights reserved.

Heat recovery units

HRU-MinistAir-W-450

Energy class

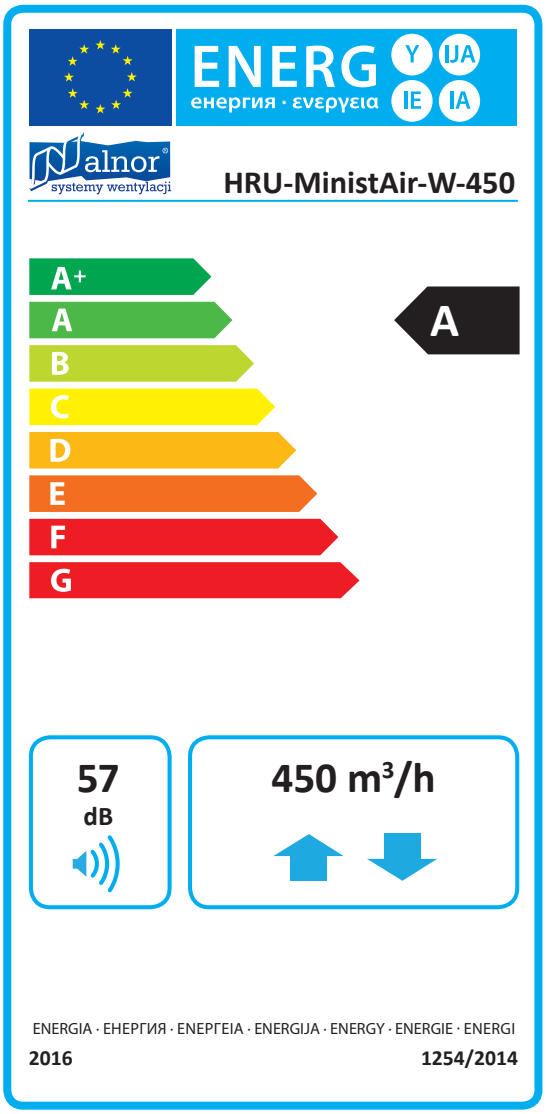

ALNOR® ventilation systems
is a legally protected trademark and technical patent. All rights reserved.

Heat recovery unit controller

HRU-MinistAir

Standard manual controller

HRU-MinistCONT-Man



Function	*Description*	*Availability*
Fan speed control	Air supply and air exhaust fans are provided with a 3-speed control system.	3 speeds (all fans) (High / Medium / Low)
Fan speed boost	This function increases the fan speed: Option 1: Press the BOOST button on the control panel Option 2: Activated with an external dry relay input or an external 230 V input (activated e.g. by a lamp switch in the kitchen, bathroom, etc.) on the controller's PCB.	Standard Standard
Filter clogging indicator	Two filter clogging indicator options: Option 1: The filter clogging indicator counts down the unit's operating time to a preset value. When the preset value is reached, a filter change request indicator is activated on the control panel. Option 2: Filter clogging can be monitored with a pressure switch. When the filter reaches the clogging limit, the pressure switch activates a filter change request indicator on the control panel.	Standard Optional
Automatic air flow bypass	The filtered fresh air is supplied indoors, bypassing the heat exchanger.	Standard
Electric heater control	The interfaced electric heater can have the output automatically switched between a maximum of 2 levels the selection of which depends on the desired temperature setting and the actual indoor temperature.	Standard
Sensor (VOD)	The fans are operated continuously by the control output of a CO2 sensor or an air quality sensor.	Optional
Sensor (Humidity)	The fans are operated continuously by the control output of an indoor air humidity sensor.	Optional
Freeze protection	If the outdoor temperature is low, the freeze protection function is activated to protect the heat exchanger from freezing.	Standard
Preheater control	If the outdoor temperature is low, the fresh air supply is treated by a preheater upstream of the unit. This function protects the heat exchanger from freezing.	Standard
BMS connectivity	IN: The unit can be turned on and off using an external control panel. OUT 1: Unit status output OUT 2: Unit fault alarm output	Standard
Modbus connectivity	This feature allows operating all controls of the unit via a PC or a central automation system.	Standard
Programmable week control timer	The unit can be programmed to operate at specific hours in a weekly cycle.	Standard
Data logging	This function allows logging all available operating options of the unit.	Standard
Fire mode	This function activates a special operating status in the case of a fire alarm.	Standard
Alarms	- Filter change required - Fan failure - Preheater failure - Heater failure	Standard (Error code display)
Child lock	Locks the control keypad to prevent inadvertent operation.	Standard

ALNOR® ventilation systems
is a legally protected trademark and technical patent. All rights reserved.

Heat recovery unit accessories

HRU-MinistAir

F7 filter

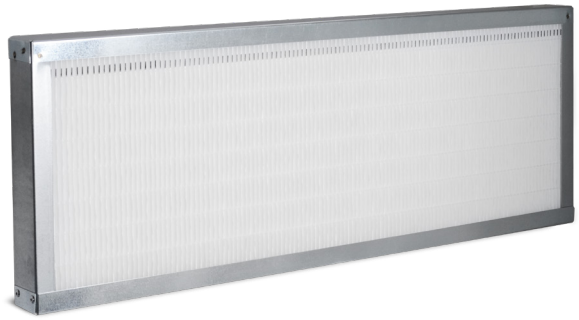

EU7 (F7) filter elements are fine filters with the rated separation efficiency at 80 – 90% for 0,4 µm particulates.

Product code	Filter class	Dimensions (mm)
HRF-Mair-250-F7	F7	150x360x30
HRF-Mair-450-F7	F7	215x605x45

EU4 filter



Product code	Filter class	Dimensions (mm)
HRF-Mair-250-EU4	EU4	150x360
HRF-Mair-450-EU4	EU4	215x605

ALNOR® ventilation systems
is a legally protected trademark and technical patent. All rights reserved.

Heat recovery ventilator

HRU-ERGO

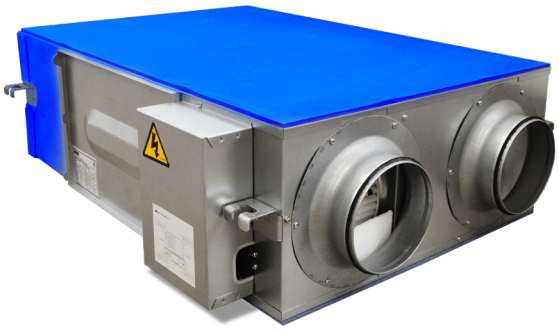

Description

The HRU-ERGO heat recovery ventilator is a suspended unit with an extremely efficient counter-flow heat exchanger.
The heat exchanger is made from plastic and processed cellulose which has a high water vapour permeability ratio, good air tightness, and good resistance to ageing.
The spacing between the cellulose fibres allows free passage of water vapour molecules. Larger molecules, like those of odours, cannot pass through the heat exchanger. This prevents the contamination of the fresh air supplied indoors.
The heat recovery ventilators are available in an output range from 250 m^3/h to 1000 m^3/h.
A standard HRU-ERGO heat recovery ventilator features 10-speed energy-efficient fans, automatic air bypass, defrosting mode (based on a fan speed control algorithm), 2 air filters, and steel duct connections.
Optional accessories include the HDE-CO electric heater and the HDW water heater, the HRU-CONTR-TPAD touch-screen controller, as well as CO_2 and air humidity sensors.

Product code example
Product code: **HRU-ERGO-250**

type _____

Dimensions

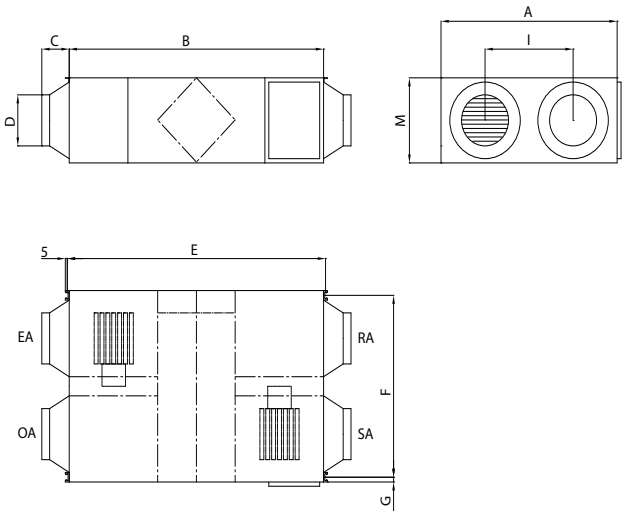

Model	Dimensions [mm]								
	A	B	C	D	E	F	G	I	M
HRU-ERGO-250	599	882	100	160	810	657	19	315	270
HRU-ERGO-350	804	882	100	160	813	860	19	480	270
HRU-ERGO-500	904	962	107	200	890	960	19	500	270
HRU-ERGO-650	884	1222	107	200	1150	940	19	480	340
HRU-ERGO-800	884	1322	85	250	1250	940	19	428	388
HRU-ERGO-1000	1134	1322	85	250	1250	1190	19	678	388

Technical specifications

Model	Air flow rate (m^3/h)	Enthalpy efficiency (%)		Temperature recovery efficiency (%)	Noise level (dB)	Voltage (V)	Power (W)	Weight (kg)
		Summer	Winter					
HRU-ERGO-250	250	63-70	70-75	75-84	34,5	230	46	29
HRU-ERGO-350	350	66-72	69-75	75-84	37,5	230	60	37
HRU-ERGO-500	500	62-74	67-75	75-86	39	230	51	43
HRU-ERGO-650	650	62-70	68-73	75-84	39,5	230	78	64
HRU-ERGO-800	800	65-74	71-77	75-84	42	230	186	71
HRU-ERGO-1000	1000	65-74	71-78	75-85	43	230	246	83

ALNOR® ventilation systems
is a legally protected trademark and technical patent. All rights reserved.

Heat recovery ventilator

HRU-ERGO

Technical specifications

Selection chart

HRU-ERGO-250

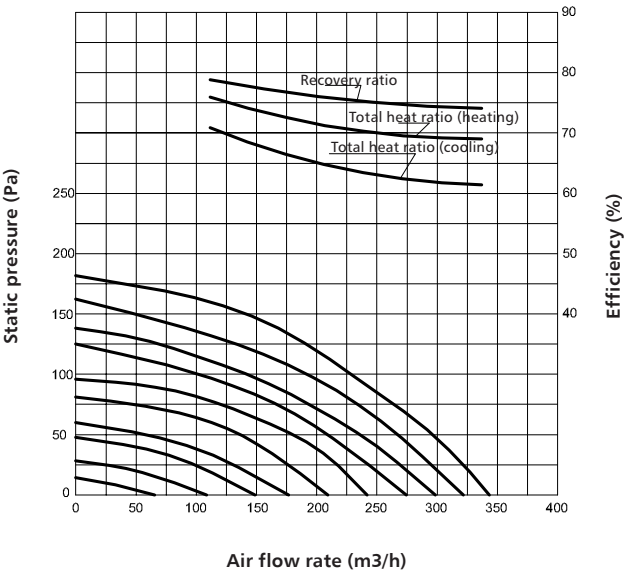

HRU-ERGO-350

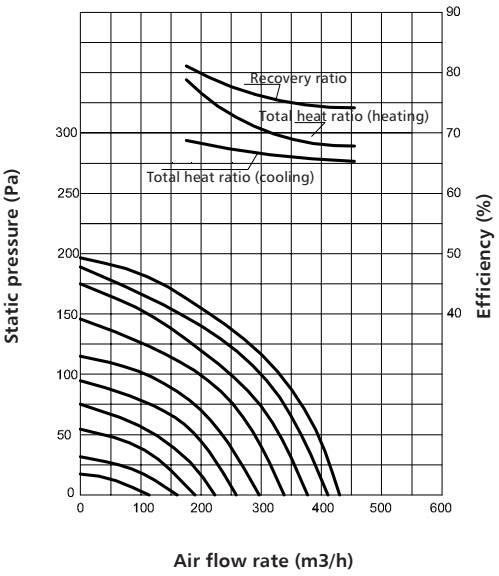

HRU-ERGO-500

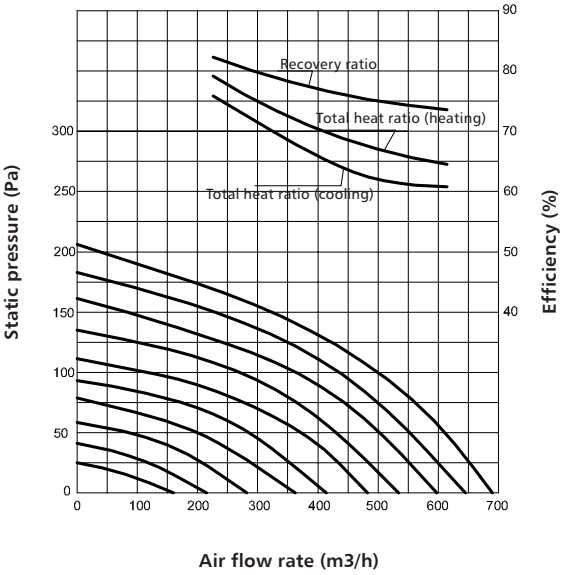

HRU-ERGO-650

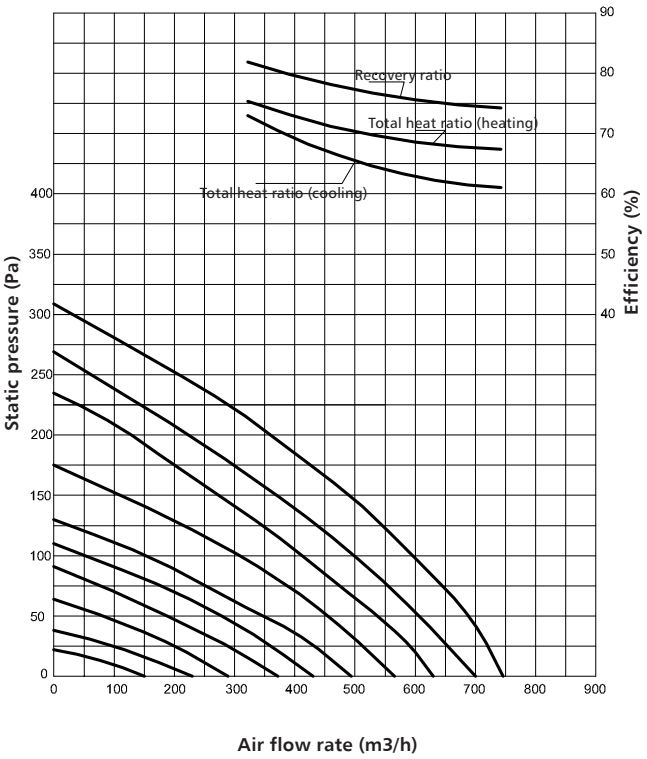

ALNOR® ventilation systems
is a legally protected trademark and technical patent. All rights reserved.

HRU-ERGO

Technical specifications

Selection chart

HRU-ERGO-800

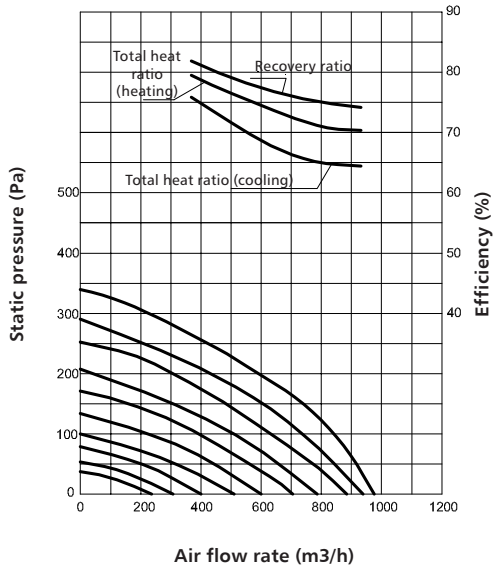

HRU-ERGO-1000

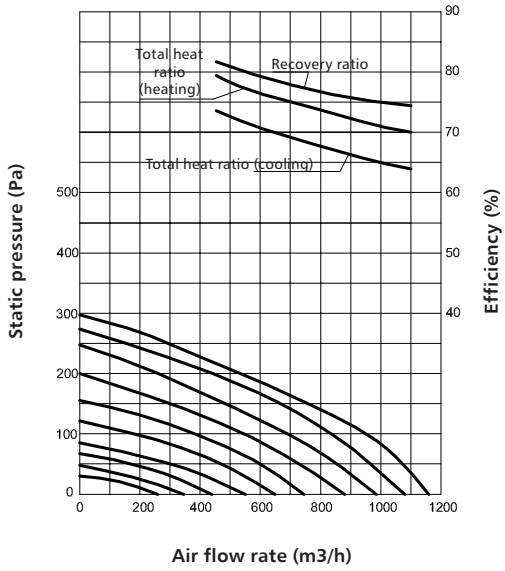

Filters

Product code	*Filter class*	*Dimensions (mm)*
HRF-ERGO-250-EU4	EU4	180 x 466
HRF-ERGO-350-EU4	EU4	180 x 670
HRF-ERGO-500-EU4	EU4	180 x 770
HRF-ERGO-650-EU4	EU4	168 x 760
HRF-ERGO-800-EU4	EU4	190 x 760
HRF-ERGO-1000-EU4	EU4	190 x 1010

Available combinations

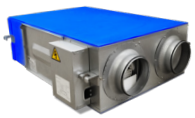

HRU-ERGO HRV

+



HRU-CONTR-TPAD controller

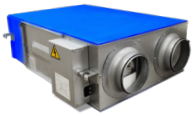

HRU-ERGO HRV

+



HDE-CO_2 heater

ALNOR® ventilation systems
is a legally protected trademark and technical patent. All rights reserved.

Heat recovery ventilator

HRU-ERGO

Available combinations


+
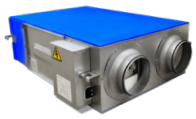

HDE-CO_1 preheater — HRU-ERGO HRV

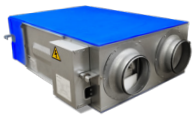
+

+

+


HRU-ERGO HRV — HDW water heater — C215Q-J 2-way valve — CQ230A actuator

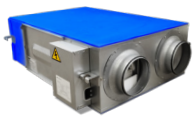
+

+

+


HRU-ERGO HRV — HDW water heater — R3..xx-B.. 3-way valve — TRY230 actuator

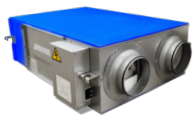
+

+


HRU-ERGO HRV — HRU-CONTR-TPAD controller — HRQ-ERGO-SENS-CO2-W sensor CO_2

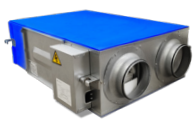
+

+


HRU-ERGO HRV — HRU-CONTR-TPAD controller — HRQ-ERGO-SENS-RH-W Air humidity sensor

ALNOR® ventilation systems
is a legally protected trademark and technical patent. All rights reserved.

Energy class

Model	Noise level (dB)	Air flow rate (m^3/h)	Energy class
HRU-ERGO-250	34,5	250	A
HRU-ERGO-350	37,5	350	A
HRU-ERGO-500	39	500	A
HRU-ERGO-650	39,5	650	A
HRU-ERGO-800	42	800	A
HRU-ERGO-1000	43	1000	A

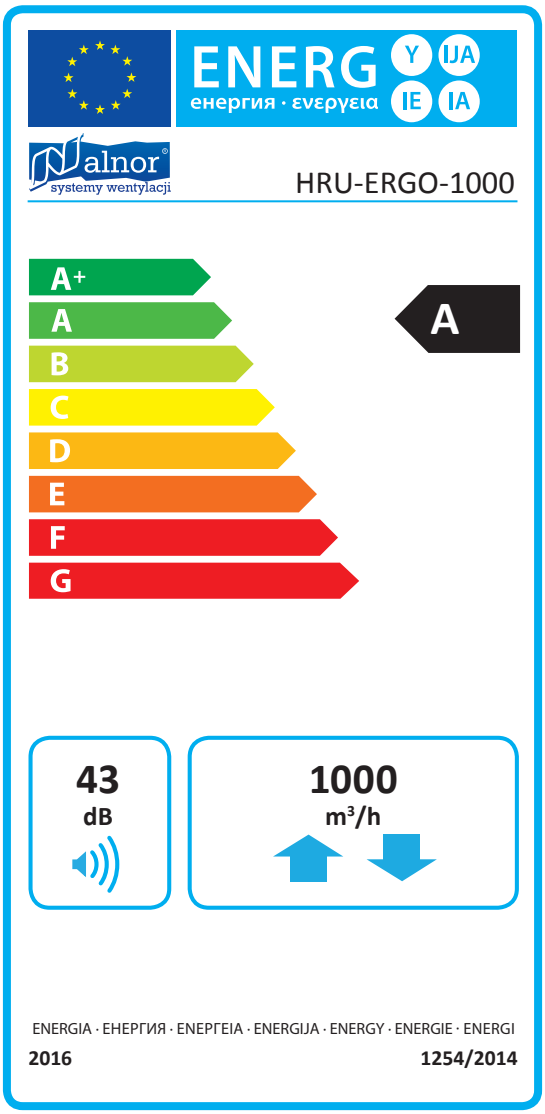

ALNOR® ventilation systems
is a legally protected trademark and technical patent. All rights reserved.

Heat recovery ventilator controller

HRU-CONTR



Description

The HRU-CONTR is a control panel for operation of a heat recovery ventilator. The HRU-CONTR controller allows programming a weekly operating timer. The connection with a heat recovery ventilator is made with a standard 5-metre wire supplied with the product.

Product code example

Product code: **HRU-CONTR**

type

Dimensions

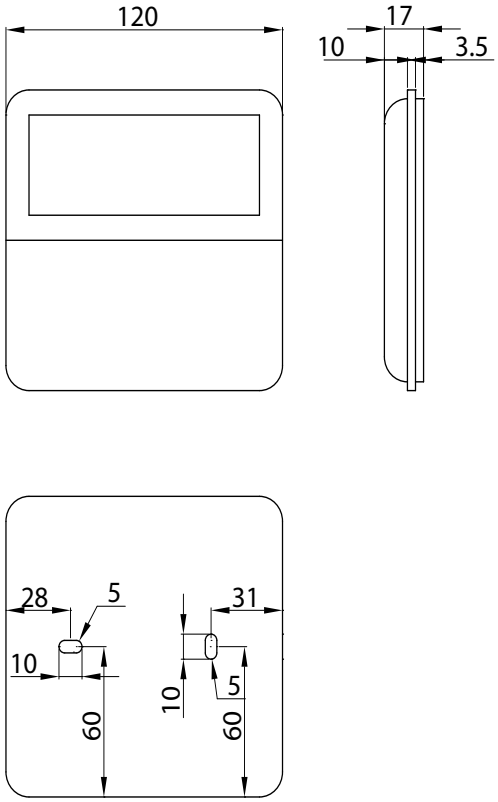

Wiring connection diagram

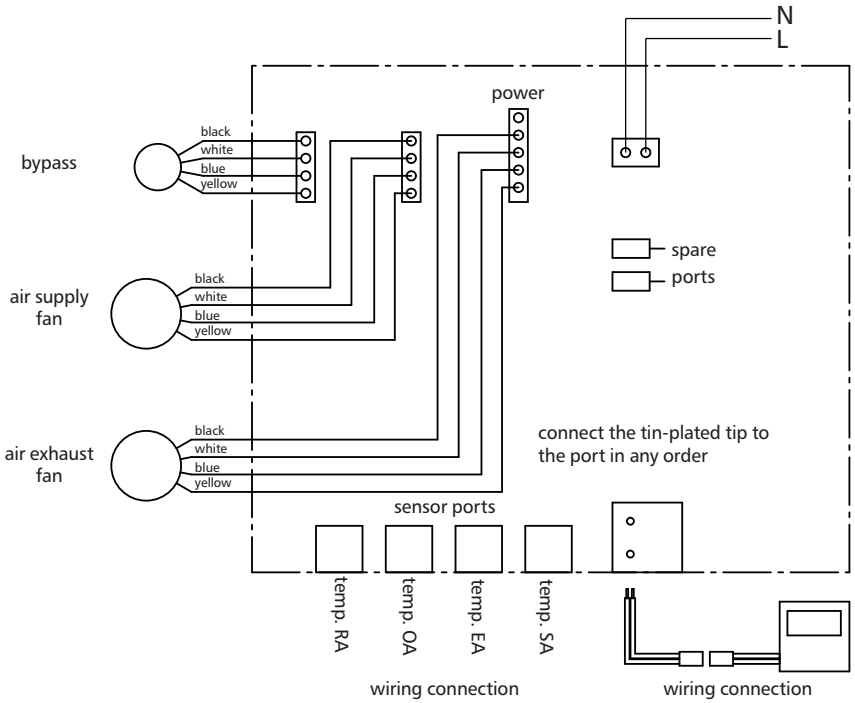

ALNOR® ventilation systems
is a legally protected trademark and technical patent. All rights reserved.

Touch-screen controller for HRU-ERGO

HRU-CONTR-TPAD



Description

The HRU-CONTR-TPAD touch-screen controller is designed for operation of heat recovery ventilators. The intuitive software interface and extensive functionalities enable easy management of HRU-ERGO heat recovery ventilators. Its modern design will seamlessly match every energy-efficient home interior of today.

Product code example

Product code: HRU-CONTR-TPAD

type

Dimensions

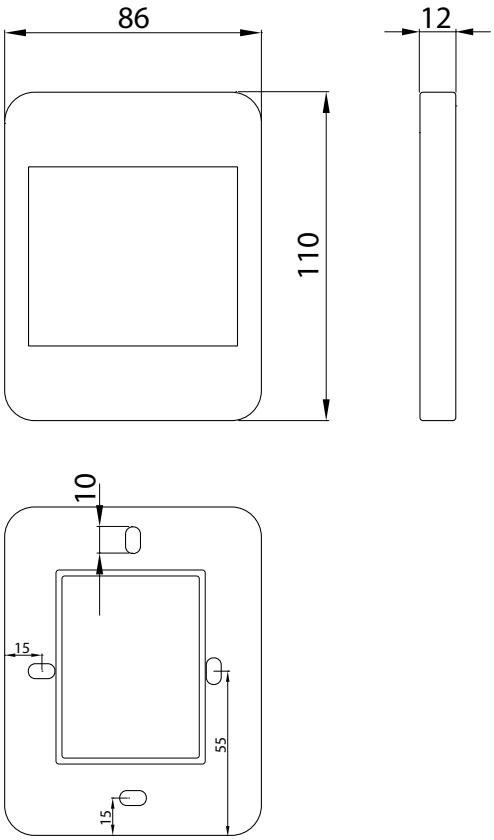

ALNOR® ventilation systems
is a legally protected trademark and technical patent. All rights reserved.

Counter-flow heat exchanger for heat recovery ventilators

HRE-ERGO



Description

The HRE-ERGO counter-flow heat exchanger is intended for the HRU-ERGO heat recovery ventilators. The heat exchanger is made with a paper material which features a high water vapour permeability, good air tightness, and good resistance to ageing.
The spacing between the cellulose fibres in the material allows free passage of water vapour molecules. Larger molecules, like those of odours, cannot pass through the heat exchanger. This prevents the contamination of the fresh air supplied indoors.

The quantity and size of heat exchangers depend on the heat recovery ventilator size:

Unit size	*HX code*	*Number of HX per unit*
HRU-ERGO-250	HRE-ERGO-25	1
HRU-ERGO-350	HRE-ERGO-35-50	2
HRU-ERGO-500	HRE-ERGO-35-50	2
HRU-ERGO-650	HRE-ERGO-65	3
HRU-ERGO-800	HRE-ERGO-80-100	3
HRU-ERGO-1000	HRE-ERGO-80-100	4

Product code example
Product code: **HRE-ERGO-25**

type

Dimensions

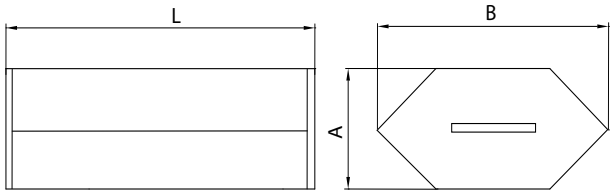

Type	*A [mm]*	*B [mm]*	*L [mm]*
HRE-ERGO-25	380	230	470
HRE-ERGO-35-50	380	230	500
HRE-ERGO-65	400	246	315
HRE-ERGO-80-100	419	525	365

ALNOR® ventilation systems
is a legally protected trademark and technical patent. All rights reserved.

CAV air flow regulator

CFR-PC-ABS / CFR-PC-ABS-HP



Description

The CFR-PC-ABS is a Constant Air Velocity regulator which automatically controls the volumetric air flow. When the air flow pressure is rising, the CAV damper automatically closes to maintain a steady air flow rate. The air flow regulator is dedicated for low-pressure ventilation systems (rated between 50 and 250 Pa) and fit for installation in horizontal or vertical ducts. The CFR-PC-ABS-HP version is designed for installations with a higher pressure of 150-600 Pa.

The air flow regulator can work in air supply and air exhaust systems alike. The control gear of the air flow regulator has a stainless steel spring. The CFR-PC-ABS is made from PC-ABS. The sizes from Ø125 up feature a stainless steel sleeve.
Flow regulator CFR-PC-ABS are made from class M1 (according to NFP 92-501) PC-ABS plastic which makes it fit for use at temperatures up to 60˚C

The air flow regulator should be installed at a distance equal to at least 3 times the duct diameter from the air supply vent and at a distance equal to at least 1 time the duct diameter from the air exhaust vent.

Product code example

Product code: **CFR-PC-ABS - aaa - bbb**

type
$Ød_1$
max. flow rate

Dimensions

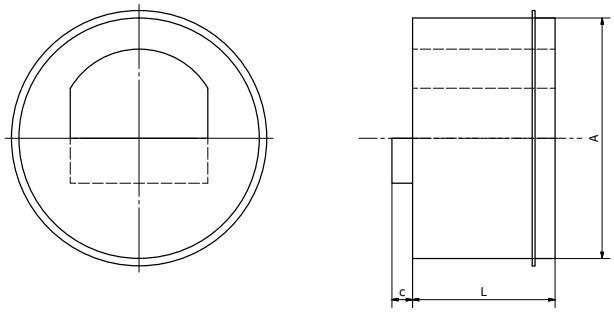

CFR-PC-ABS

Ød (mm)	A (mm)	L (mm)	C (mm)	Weight (g)
80	75.9	47	5	72.8
100	96.1	57	6	115
125	120.5	62	0	156.1
150	149	86	0	323
160	149	86	0	323
200	192.3	86	0	474.8
250	239.5	86	29	788.5

CFR-PC-ABS-HP

Ød (mm)	A (mm)	L (mm)	C (mm)	Weight (g)
80	75.9	55	5	72.8
100	96.1	70	6	115
125	120.5	86	0	156.1
150	149	91	0	323
160	149	91	0	323
200	192.3	91	0	474.8
250	239.5	120	29	788.5

ALNOR® ventilation systems
is a legally protected trademark and technical patent. All rights reserved.

CAV air flow regulator

CFR-PC-ABS / CFR-PC-ABS-HP

Technical specifications

The model CFR-PC-ABS or CFR-PC-ABS-HP is available with several performance ratings for every diameter size. The table below shows the air flow ratings for each version:

CFR-PC-ABS

Ød [mm]	Air flow rate (m3/h)					
	15-50	50-100	100-180	180-300	300-500	500-700
80	X					
100	X	X				
125	X	X	X			
150	X	X	X	X		
160	X	X	X	X		
200	X	X	X	X	X	
250		X	X	X	X	X

CFR-PC-ABS-HP

Ød [mm]	Air flow rate (m3/h)					
	25-90	90-170	180-300	300-500	500-850	850-1300
80	X					
100	X	X				
125	X	X	X			
150		X	X	X		
160		X	X	X		
200			X	X	X	
250				X	X	X

For example: CFR-PC-ABS-100-180 is an air flow regulator of diameter 100 mm and air flow rate 50 – 100 m³/h. The device is factory-set at the maximum output; it is possible to adjust the parameter according to the output adjustment chart displayed on the device.



Pressure head (Pa)

Selection charts

The graphs below show the airflow flow rates in m³/h in exctarcion. These are average values, the tolerance should be assumed:
+/- 3 m³ / h for an air flow rate ≤ 50 m³/h
+/- 5% for an air flow rate> 50 m3/h

CFR-PC-ABS

Air flow rate 15 – 50 m³/h

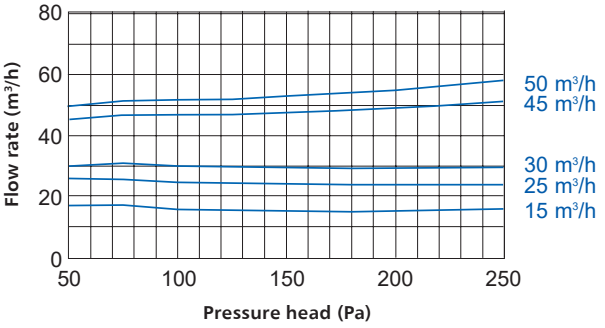

Air flow rate 50 – 100 m³/h

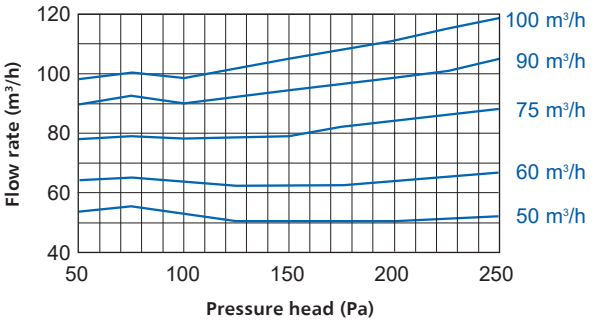

Air flow rate 100 – 180 m³/h

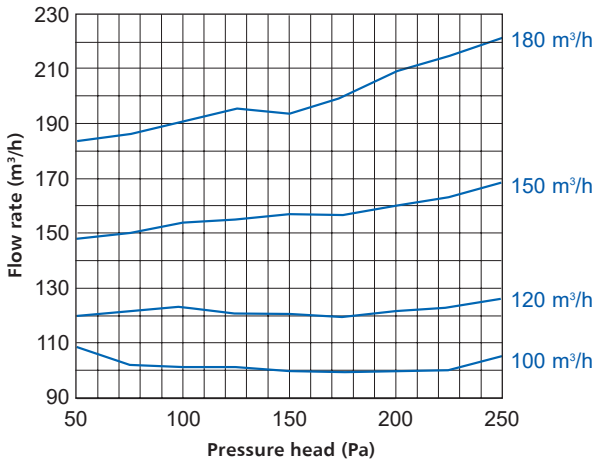

ALNOR® ventilation systems
is a legally protected trademark and technical patent. All rights reserved.

CAV air flow regulator

CFR-PC-ABS / CFR-PC-ABS-HP

Air flow rate 180 – 300 m³/h

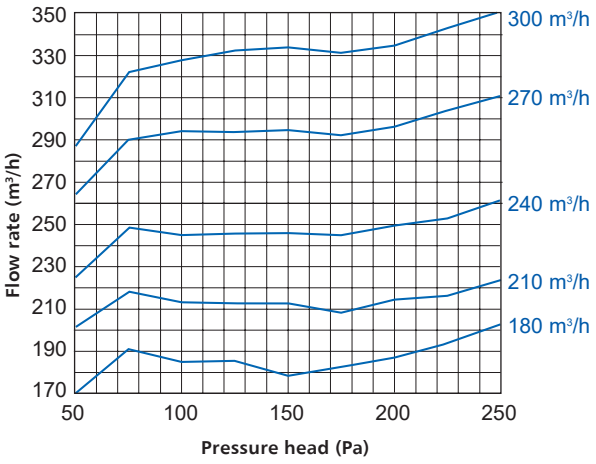

Air flow rate 300 – 500 m³/h

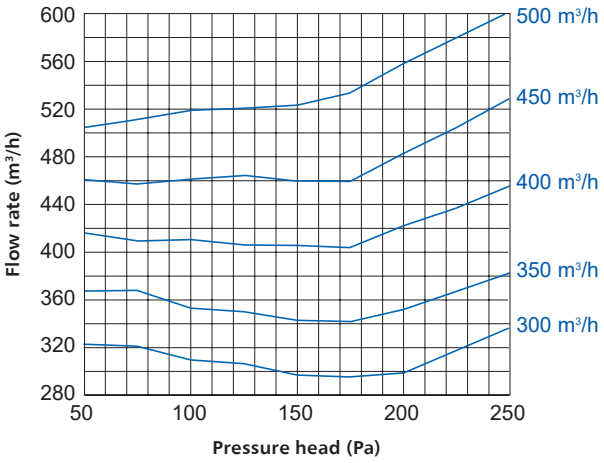

Air flow rate 500 – 700 m³/h

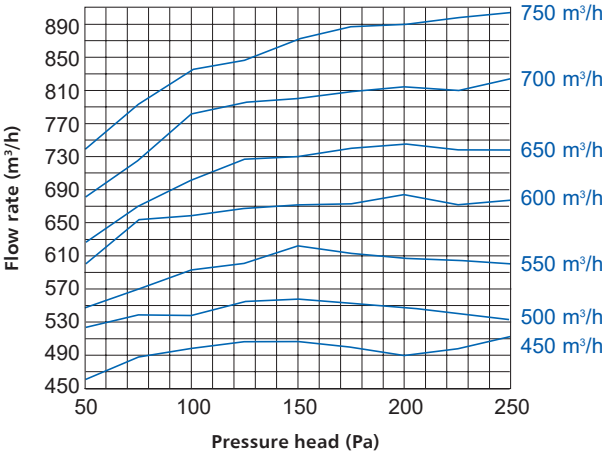

CFR-PC-ABS-HP

Air flow rate 25 – 90 m³/h

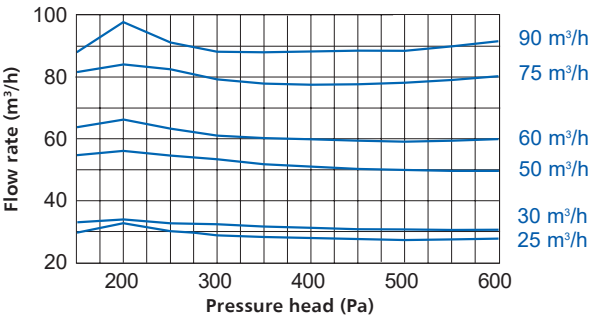

Air flow rate 90 – 170 m³/h

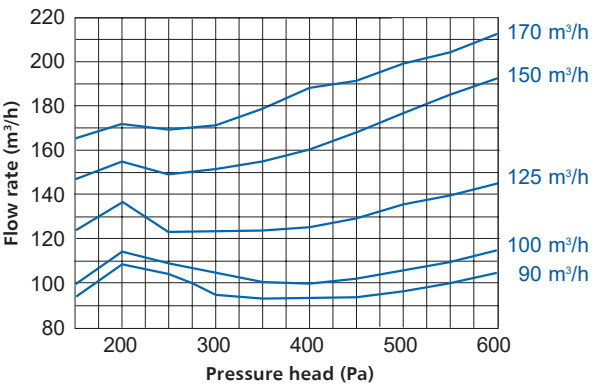

Air flow rate 180 – 300 m³/h

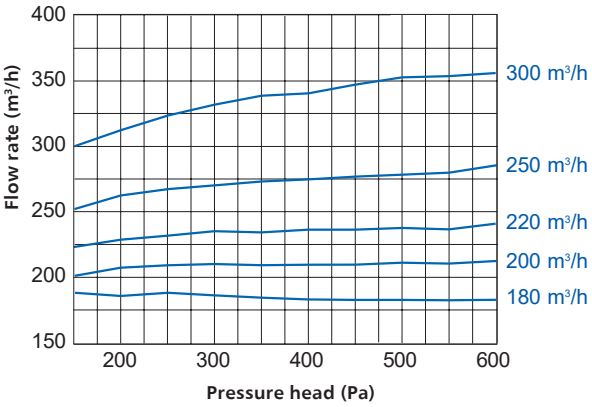

ALNOR® ventilation systems
is a legally protected trademark and technical patent. All rights reserved.

CAV air flow regulator

CFR-PC-ABS / CFR-PC-ABS-HP

Air flow rate 300 – 500 m³/h

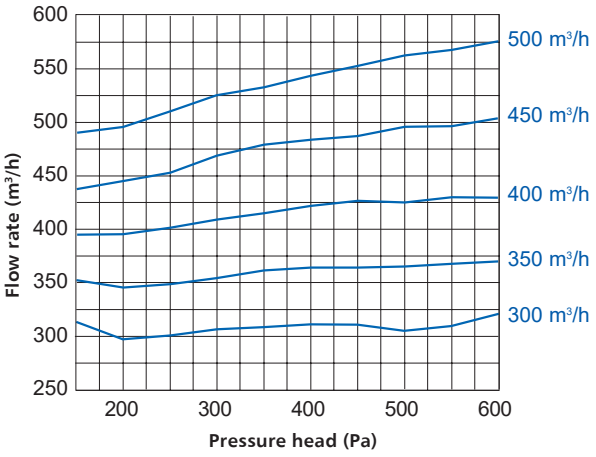

Air flow rate 500 – 700 m³/h

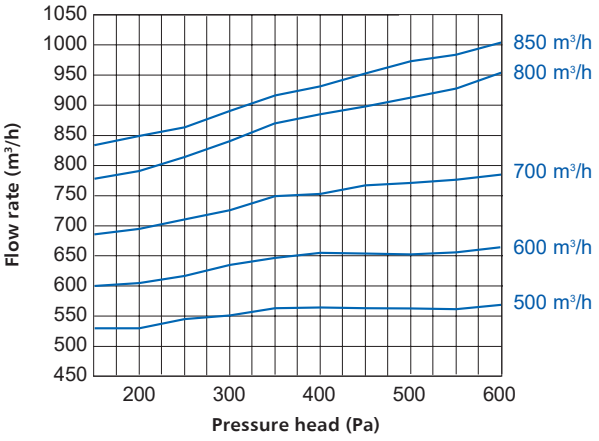

Air flow rate 850 – 1300 m³/h

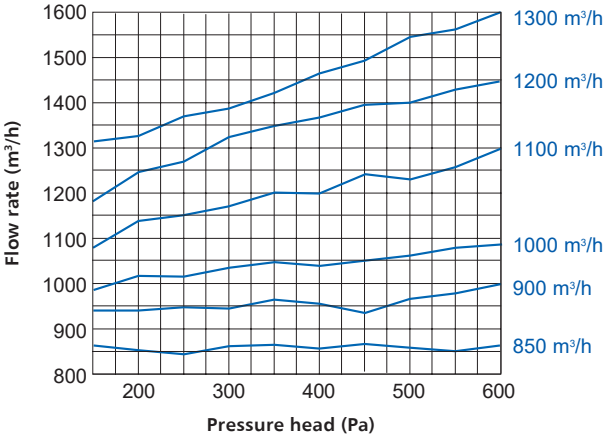

ALNOR® ventilation systems
is a legally protected trademark and technical patent. All rights reserved.

CAV air flow regulator

CFR-PC-ABS / CFR-PC-ABS-HP

Sound power level

Flow regulator Ø80 - 15 to 50 m³/h

Air flow [m³/h]	Lw dB(A)				
	50 Pa	100 Pa	150 Pa	200 Pa	250 Pa
15	24	30	33	35	37
25	26	33	38	42	45
30	27	33	39	43	45
45	27	33	39	42	45
50	28	34	38	42	45

Flow regulator Ø100 - 15 to 50 m³/h

Air flow [m³/h]	Lw dB(A)				
	50 Pa	100 Pa	150 Pa	200 Pa	250 Pa
15	24	26	30	33	36
25	26	33	37	41	44
30	27	33	37	42	45
45	29	36	40	42	44
50	29	36	38	42	44

Flow regulator Ø100 - 50 to 100 m³/h

Air flow [m³/h]	Lw dB(A)				
	50 Pa	100 Pa	150 Pa	200 Pa	250 Pa
50	29	35	40	43	45
60	31	37	41	44	46
75	31	38	42	45	48
90	33	39	43	46	48
100	33	39	43	46	48

Flow regulator Ø125 - 15 to 50 m³/h

Air flow [m³/h]	Lw dB(A)				
	50 Pa	100 Pa	150 Pa	200 Pa	250 Pa
15	25	29	32	34	36
25	26	32	37	42	45
30	27	32	37	42	46
45	28	33	37	41	44
50	30	34	37	41	44

Flow regulator Ø125 - 50 to 100 m³/h

Air flow [m³/h]	Lw dB(A)				
	50 Pa	100 Pa	150 Pa	200 Pa	250 Pa
50	27	34	39	43	45
60	30	35	39	43	45
75	31	35	39	43	45
90	32	35	39	43	45
100	34	36	40	43	45

Flow regulator Ø125 - 100 to 180 m³/h

Air flow [m³/h]	Lw dB(A)				
	50 Pa	100 Pa	150 Pa	200 Pa	250 Pa
100	35	40	44	48	50
120	35	41	45	47	48
150	36	42	45	47	49
180	38	42	45	47	49

Flow regulator Ø150/160 - 100 to 180 m³/h

Air flow [m³/h]	Lw dB(A)				
	50 Pa	100 Pa	150 Pa	200 Pa	250 Pa
100	38	44	46	49	51
120	39	44	47	49	50
150	40	45	49	51	52
180	42	47	49	51	53

Flow regulator Ø150/160 - 180 to 300 m³/h

Air flow [m³/h]	Lw dB(A)				
	50 Pa	100 Pa	150 Pa	200 Pa	250 Pa
180	38	43	46	49	51
210	39	45	48	50	52
240	40	44	47	49	50
270	39	45	48	50	52
300	41	46	49	51	53

Flow regulator Ø200 - 180 to 300 m³/h

Air flow [m³/h]	Lw dB(A)				
	50 Pa	100 Pa	150 Pa	200 Pa	250 Pa
180	39	45	47	50	53
210	40	46	48	49	51
240	40	46	49	51	53
270	40	47	50	51	53
300	42	50	52	53	54

Flow regulator Ø200 - 300 to 500 m³/h

Air flow [m³/h]	Lw dB(A)				
	50 Pa	100 Pa	150 Pa	200 Pa	250 Pa
300	39	44	48	50	52
350	41	45	49	51	54
400	41	47	50	52	54
450	41	47	51	53	55
500	42	48	52	54	56

ALNOR® ventilation systems
is a legally protected trademark and technical patent. All rights reserved.

CAV air flow regulator

CFR-PC-ABS / CFR-PC-ABS-HP

Flow regulator Ø250 - 300 to 500 m³/h

Air flow [m³/h]	Lw dB(A)				
	50 Pa	100 Pa	150 Pa	200 Pa	250 Pa
300	34	44	48	49	51
350	36	45	49	50	52
400	37	46	50	52	53
450	37	47	52	54	55
500	38	48	52	54	56

Flow regulator Ø250 - 450 to 700 m³/h

Air flow [m³/h]	Lw dB(A)				
	50 Pa	100 Pa	150 Pa	200 Pa	250 Pa
450	35	42	47	50	53
500	36	44	48	51	56
550	44	48	51	54	60
600	45	50	52	58	58
650	45	50	53	57	58
700	46	51	55	56	57

ALNOR® ventilation systems
is a legally protected trademark and technical patent. All rights reserved.

CAV Constant air flow regulator

RACAV

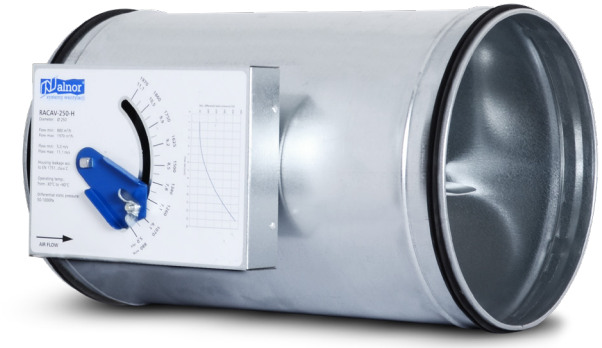

Description

The RACAV constant air velocity regulator keeps the air output steady in ventilation systems. The device works without any electric power supply and from the minimum pressure differential shown in Chart 1 to the maximum pressure differential of 1000 Pa. The air velocity stability may be reduced outside the range shown in the differential pressure chart. The regulator can be used in comfort or industrial air supply and air exhaust systems.



The air flow rate setting is protected against tampering with a dedicated RACAV-NUT6 nut which can only be operated with a matching RACAV-KEY.

Available materials:

RACAV-...	- galvanised steel (standard version)
RACAV-K-...	- 1.4301/304 stainless steel
RACAV-K-...-316L	- 1.4404/316L stainless steel
RACAV-I-...	- galvanized steel with 50 mm thick insulation in cladding
RACAV-I-K-...	- 1.4301/304 stainless steel with 50 mm thick insulation in cladding
RACAV-I-...-K-316L	- 1.4404/316L stainless steel with 50 mm thick insulation in cladding

Product code example

Product code: **RACAV - I - aaa**

type
insulation
diameter

Dimensions

RACAV

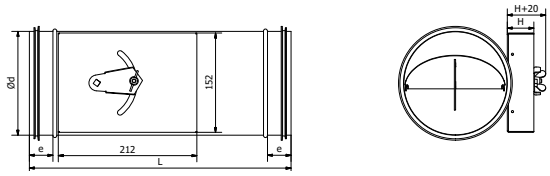

RACAV-I

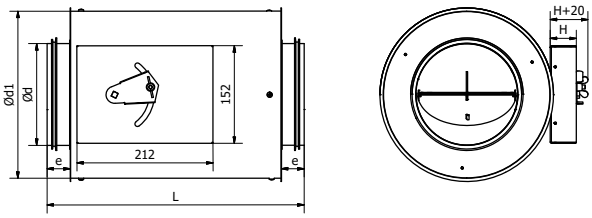

Dimensions and weight of RACAV regulators

Product code	*Ød [mm]*	*L [mm]*	*H [mm]*	*Weight [kg]*
RACAV-125-L	125	400	40	2,23
RACAV-125-H	125	400	40	2,23
RACAV-160-L	160	400	40	2,55
RACAV-160-H	160	400	40	2,55
RACAV-200-L	200	400	40	2,67
RACAV-200-H	200	400	40	2,67
RACAV-250-L	250	400	40	3,12
RACAV-250-H	250	400	40	3,12
RACAV-315-L	315	400	55	3,73
RACAV-315-H	315	400	55	3,73

Dimensions and weight of insulated RACAV regulators

Product code	*Ød [mm]*	*$Ød_1$ [mm]*	*L [mm]*	*H [mm]*	*Weight [kg]*
RACAV-I-125-L	125	224	400	40	3,27
RACAV-I-125-H	125	224	400	40	3,27
RACAV-I-160-L	160	250	400	40	3,86
RACAV-I-160-H	160	250	400	40	3,86
RACAV-I-200-L	200	300	400	40	4,29
RACAV-I-200-H	200	300	400	40	4,29
RACAV-I-250-L	250	355	400	40	5,11
RACAV-I-250-H	250	355	400	40	5,11
RACAV-I-315-L	315	400	400	55	6,22
RACAV-I-315-H	315	400	400	55	6,22

ALNOR® ventilation systems
is a legally protected trademark and technical patent. All rights reserved.

CAV Constant air flow regulator

RACAV

Design and principle of operation

The housing and most components of the regulator control gear are made from galvanized steel sheet; the moving damper blade is made from aluminium sheet. The housing can be fabricated from 1.4301/304 or 1.4404/316L stainless steel sheet on request. The standard gaskets are made from EPDM which resists temperatures up to 100 °C. The bearings are made from Nylon 6.6. The operating principle of a CAV regulator is to equalize the damper closing torque caused by the air flow with the damper opening torque generated by the control gear. When the CAV regulator senses an increase in pressure differential (caused e.g. by closing a ventilation damper, an increased air output from an AHU, etc.), the CAV regulator damper begins to close automatically to keep the air output constant. The CAV regulator features a vibration damper which holds the damper blade steady.
All CAV regulators are available in two air output ranges labelled L and H, as well as in versions with 50 mm thick thermal insulation in cladding made from galvanized steel sheet, 1.4301/304 or 1.4404/316L stainless steel sheet. The product can be made with FLS steel flange connections on request.

Regulator operating accuracy

Flow rate (m^3/h) RACAV-125-L	*Regulator operating accuracy*	*Flow rate (m^3/h) RACAV-125-H*	*Regulator operating accuracy*
130	20%	190	20%
170	15%	255	15%
210	15%	320	15%
235	10%	360	10%
260	10%	400	10%
275	10%	435	10%
290	10%	470	10%
300	10%	485	10%
310	15%	500	15%

Flow rate (m^3/h) RACAV-160-L	*Regulator operating accuracy*	*Flow rate (m^3/h) RACAV-160-H*	*Regulator operating accuracy*
260	20%	340	20%
315	15%	400	15%
370	15%	460	15%
415	10%	510	10%
460	10%	560	10%
500	10%	610	10%
540	10%	660	10%
560	10%	705	10%
580	10%	750	10%

Regulator operating accuracy

Flow rate (m^3/h) RACAV-200-L	*Regulator operating accuracy*	*Flow rate (m^3/h) RACAV-200-H*	*Regulator operating accuracy*
380	20%	540	20%
525	15%	700	15%
670	15%	860	15%
760	10%	940	10%
850	10%	1020	10%
890	10%	1105	10%
930	10%	1190	10%
945	10%	1220	10%
960	10%	1250	10%

Flow rate (m^3/h) RACAV-250-L	*Regulator operating accuracy*	*Flow rate (m^3/h) RACAV-250-H*	*Regulator operating accuracy*
650	20%	880	20%
805	15%	1070	15%
960	15%	1260	15%
1065	10%	1380	10%
1170	10%	1500	10%
1240	10%	1625	10%
1310	10%	1750	10%
1370	10%	1860	10%
1430	10%	1970	10%

Flow rate (m^3/h) RACAV-315-L	*Regulator operating accuracy*	*Flow rate (m^3/h) RACAV-315-H*	*Regulator operating accuracy*
1040	20%	1250	20%
1275	15%	1625	15%
1510	15%	2000	15%
1705	10%	2255	10%
1900	10%	2510	10%
2045	10%	2660	10%
2190	10%	2810	10%
2300	10%	2980	10%
2410	10%	3150	10%

ALNOR® ventilation systems
is a legally protected trademark and technical patent. All rights reserved.

CAV Constant air flow regulator

RACAV

Installation method

CAV regulators work with the declared control accuracy if its installation position is at least at the minimum recommended distance from units generating air flow turbulence, e.g. ventilation dampers, bends, T-pieces, reducers, silencers, etc. The minimum recommended installation distance is 2.5 × the nominal diameter of the CAV regulator.

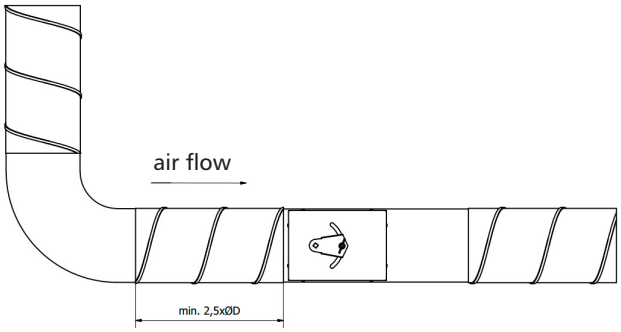

Operation conditions

CAV regulators work properly in a temperature range from -30 ˚C to +80 ˚C. CAV regulators are not intended for use with aggressive airborne chemicals and airborne particulates.

Minimum pressure differential

For proper performance of RACAV air flow regulators, the minimum static pressure differential between both sides of the device must be maintained. The actual pressure differential depends on the designed air flow rate in the duct in which the CAV regulator is installed.

Chart 1. Minimum pressure differential

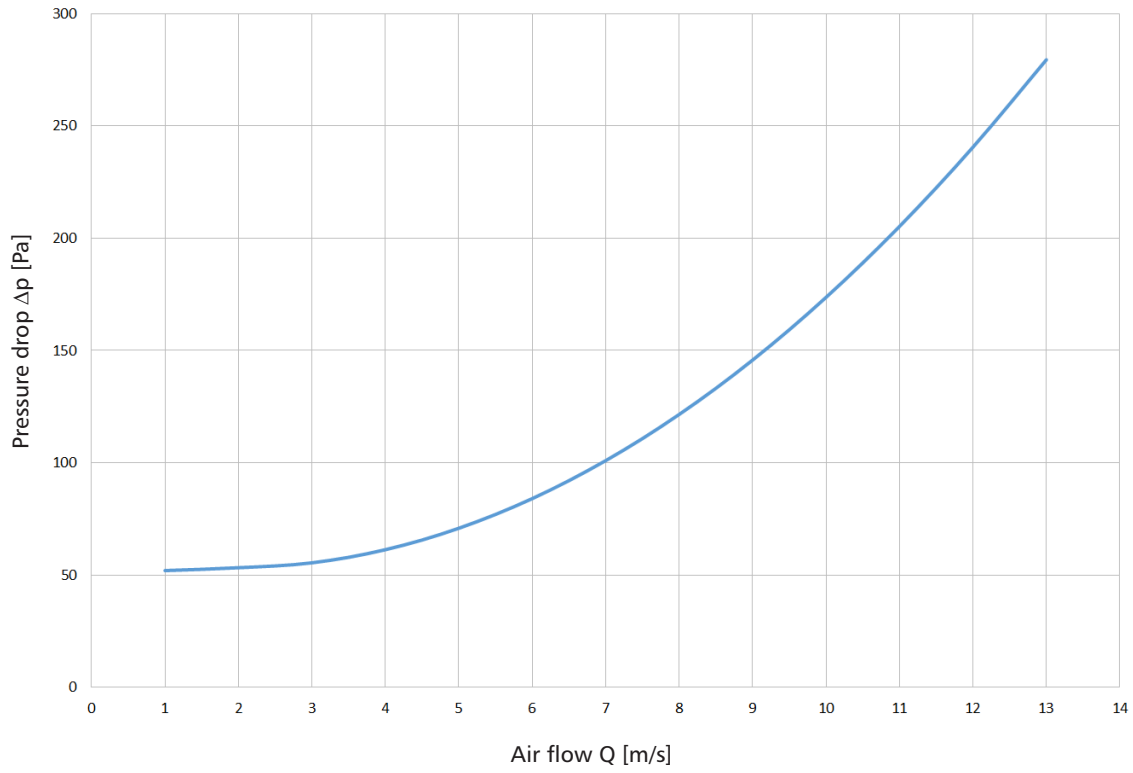

The accuracy of the scale on the air flow regulator control gear housing is ± 5%.

ALNOR® ventilation systems
is a legally protected trademark and technical patent. All rights reserved.

CAV Constant air flow regulator
RACAV

Sound ratings

Noise emission into the ductwork vs. air flow rates, where:
ØD — air flow regulator nominal diameter
v — air flow velocity (m/s)
Q — air flow output (m^3/h), (l/s)
Δp — static pressure differential (Pa)
f_m — octave band mid frequency values (Hz)
L_W — sound power level (dBA)
L_{WA} — A-weighed sound power level (dBA)

ØD	v [m/s]	Q		Δp=100 [Pa]									Δp=250 [Pa]									Δp=500 [Pa]								
				L_W [dB] Oct									L_W [dB] Oct									L_W [dB] Oct								
				f_m [Hz]								L_{WA} [dB(A)]	f_m [Hz]								L_{WA} [dB(A)]	f_m [Hz]								L_{WA} [dB(A)]
		[m^3/h]	[l/s]	63	125	250	500	1000	2000	4000	8000		63	125	250	500	1000	2000	4000	8000		63	125	250	500	1000	2000	4000	8000	
125	2	83	23	41	39	37	35	33	31	29	26	39	52	50	47	45	43	41	39	37	49	61	59	57	55	53	51	48	46	58
	4	167	46	49	47	45	43	41	38	36	34	46	57	55	53	51	49	46	44	42	54	64	62	60	57	55	53	51	49	61
	6	250	70	55	53	50	48	46	44	42	40	52	62	60	58	55	53	51	49	47	59	68	66	64	61	59	57	55	53	65
	8	334	93	58	56	54	52	49	47	45	43	55	66	64	61	59	57	55	53	51	63	71	69	67	65	63	60	58	56	68
	10	417	116	61	58	56	54	52	50	48	46	58	69	67	65	62	60	58	56	54	66	74	72	70	68	66	63	61	59	71
	12	501	139	63	61	59	57	54	52	50	48	60	71	69	66	64	62	60	58	56	68	77	74	72	70	68	66	64	62	74
160	2	139	38	43	40	38	36	34	32	30	28	40	53	51	49	46	44	42	40	38	50	62	60	58	56	54	52	50	48	60
	4	277	77	50	48	46	44	42	40	38	35	48	58	56	54	52	50	48	45	43	55	65	63	61	59	57	54	52	50	62
	6	416	115	56	54	52	50	47	45	43	41	53	63	61	59	57	54	52	50	48	60	69	67	65	63	60	58	56	54	66
	8	554	154	59	57	55	53	51	48	46	44	56	67	65	63	60	58	56	54	52	64	72	70	68	66	64	62	60	57	70
	10	693	192	62	60	58	55	53	51	49	47	59	70	68	66	64	61	59	57	55	67	75	73	71	69	67	65	62	60	72
	12	831	231	64	62	60	58	56	54	51	49	61	72	70	68	65	63	61	59	57	69	78	76	74	71	69	67	65	63	75
200	2	218	61	44	42	39	37	35	33	31	29	41	54	52	50	47	45	43	41	39	51	64	61	59	57	55	53	51	49	61
	4	436	121	51	49	47	45	43	41	39	36	49	59	57	55	53	51	49	46	44	57	66	64	62	60	58	55	53	51	63
	6	654	182	57	55	53	51	48	46	44	42	54	64	62	60	58	56	53	51	49	61	70	68	66	64	62	59	57	55	67
	8	872	242	60	58	56	54	52	50	47	45	57	68	66	64	62	59	57	55	53	65	73	71	69	67	65	63	61	58	71
	10	1091	303	63	61	59	56	54	52	50	48	60	71	69	67	65	63	60	58	56	68	76	74	72	70	68	66	64	61	74
	12	1309	364	65	63	61	59	57	55	52	50	62	73	71	69	67	64	62	60	58	70	79	77	75	72	70	68	66	64	76
250	2	342	95	45	43	40	38	36	34	32	30	42	55	53	51	49	46	44	42	40	52	65	62	60	58	56	54	52	50	62
	4	684	190	52	50	48	46	44	42	40	38	50	60	58	56	54	52	50	48	45	58	67	65	63	61	59	57	54	52	64
	6	1027	285	58	56	54	52	49	47	45	43	55	65	63	61	59	57	54	52	50	62	71	69	67	65	63	60	58	56	68
	8	1369	380	61	59	57	55	53	51	48	46	58	69	67	65	63	60	58	56	54	66	75	72	70	68	66	64	62	60	72
	10	1711	475	64	62	60	58	55	53	51	49	61	72	70	68	66	64	61	59	57	69	77	75	73	71	69	67	65	62	75
	12	2053	570	66	64	62	60	58	56	54	51	64	74	72	70	68	65	63	61	59	71	80	78	76	74	71	69	67	65	77
315	2	546	152	46	44	42	39	37	35	33	31	43	56	54	52	50	48	45	43	41	53	66	64	61	59	57	55	53	51	63
	4	1092	303	54	51	49	47	45	43	41	39	51	62	59	57	55	53	51	49	47	59	68	66	64	62	60	58	56	53	66
	6	1639	455	59	57	55	53	51	48	46	44	56	66	64	62	60	58	56	53	51	63	72	70	68	66	64	62	59	57	69
	8	2185	607	62	60	58	56	54	52	50	47	60	70	68	66	64	62	59	57	55	67	76	74	71	69	67	65	63	61	73
	10	2731	759	65	63	61	59	56	54	52	50	62	73	71	69	67	65	63	60	58	70	79	76	74	72	70	68	66	64	76
	12	3277	910	67	65	63	61	59	57	55	52	65	75	73	71	69	67	64	62	60	72	81	79	77	75	72	70	68	66	78

ALNOR® ventilation systems
is a legally protected trademark and technical patent. All rights reserved.

VAV flow regulator
RAVAV



Description

The RAVAV regulator is dedicated for forced ventilation systems and is an important component for installations with variable air flow.

The regulator casing is made of Z 275 galvanized sheet. Optionally, it is possible to use the 1.4301 stainless steel to build the casing. Casing sides with factory-installed EPDM rubber gaskets ensure tight connection to ventilation ducts. Inside the casing, the adjusting damper is also insulated (depending on the control mechanism). The servomotor is installed on the control unit casing so as to allow for thermal insulation of the system. The regulator is also available in the version with pre-installed 50 mm insulation and a galvanised steel shield.
The measuring system based on aluminum impact pressure tubes and pressure relieve stub pipes ensures reliable measuring of the air flow.
Sensor, control unit and servomotor are integrated in one device. The servomotor adjusts the damper position, the control unit compares the current air flow rate with the set value and the sensor turns the differential pressure value into electric signal.
It is possible to use separate control mechanism components to achieve shorter operating times of the actuator or to use the sensor in an aggressive environment.

Version: 009v2/03/20/PG.

Marking example

Product code: **RAVAV- aaa - bbb - ccc - ddd**

type
material
insulation
control mechanism
diameter

Dimensions

Default: not insulated

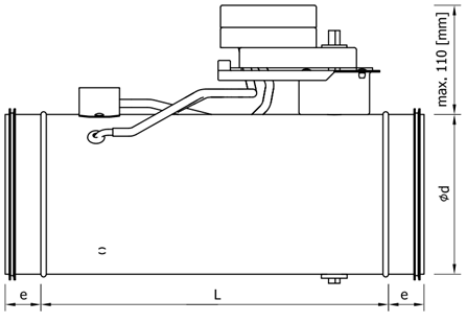

Version insulation with external shield, thickness: 50 mm

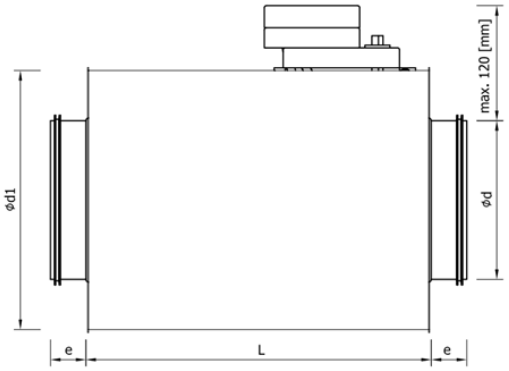

DN	L [mm]	e [mm]	d [mm]	d1 [mm]	weight RAVAV [kg]	weight RAVAV-I [kg]
100	338	36	99	200	1,4	2,8
125	338	36	124	224	1,7	3,4
160	338	36	159	250	2,1	4,2
200	338	36	199	300	2,3	4,5
250	528	36	249	355	4,0	8,0
315	528	36	314	400	5,0	9,9
400	490	55	399	500	7,6	15,2
500	490	75	496	600	-	-
630	490	75	626	710	-	-

ALNOR® ventilation systems
is a legally protected trademark and technical patent. All rights reserved.

VAV flow regulator

RAVAV

Ordering options

Material:

RAVAV-...	- default: galvanised steel
RAVAV-K-...	- 1.4301/304

Insulation:

RAVAV-...	- default: not insulated
RAVAV-I-...	- insulation with external shield, thickness: 50 mm
RAVAV-K-I-...	- steel 1.4301/304, insulation with external shield, thickness 50 mm

Control mechanism:

RAVAV-...	- Belimo servomotor, series Compact LMV-D3... no internal insulation for Ø400-630; (default)
RAVAV-NM	- Belimo servomotor, series Compact NMV-D3... internal insulation for Ø400-630
RAVAV-G	- Gruner servomotor, series 227VM
RAVAV-LON	- Lonworks servomotor
RAVAV-MOD	- Modbus RTU servomotor
RAVAV-KNX	- KNX servomotor

Diameter:
Regulators are available in the range of Ø100-630mm.

*__Additional options:__
V_{min} - flow minimum [m³/h (range 0-100% V_{nom})
V_{max} - flow maximum [m³/h] (range 0-100% V_{nom})
0-10 (or different) - control signal (default 2-10 V)

*Please specify non-standard settings, when placing an order.

Code example:
RAVAV-K-I-KNX-315

The manufacturer reserves the right to make changes.

Characteristics

- High air flow measurement accuracy (,
- The insulation rating of the adjusting damper is class 4 as per EN-1751:1998 (optional),
- Casing tightness is class C as per EN-1751:1998,
- Operating temperature range from 0 to 50 [˚C],
- Differential pressure range from 0 to 300 [Pa] (from 0 to 250 [Pa] for RAVAV-G),
- Possibility to measure current air flow parameters using external micromanometers.

Operating diagram

Sensor, control unit and servomotor are integrated in one device. The servomotor adjusts the damper position, the control unit compares the current air flow rate with the set value and the sensor turns the differential pressure value into electric signal.

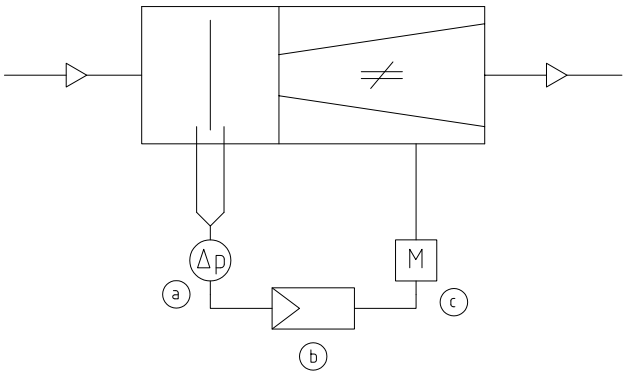

a - sensor b - control c - serwomotor

ALNOR® ventilation systems
is a legally protected trademark and technical patent. All rights reserved.

Pressure drops

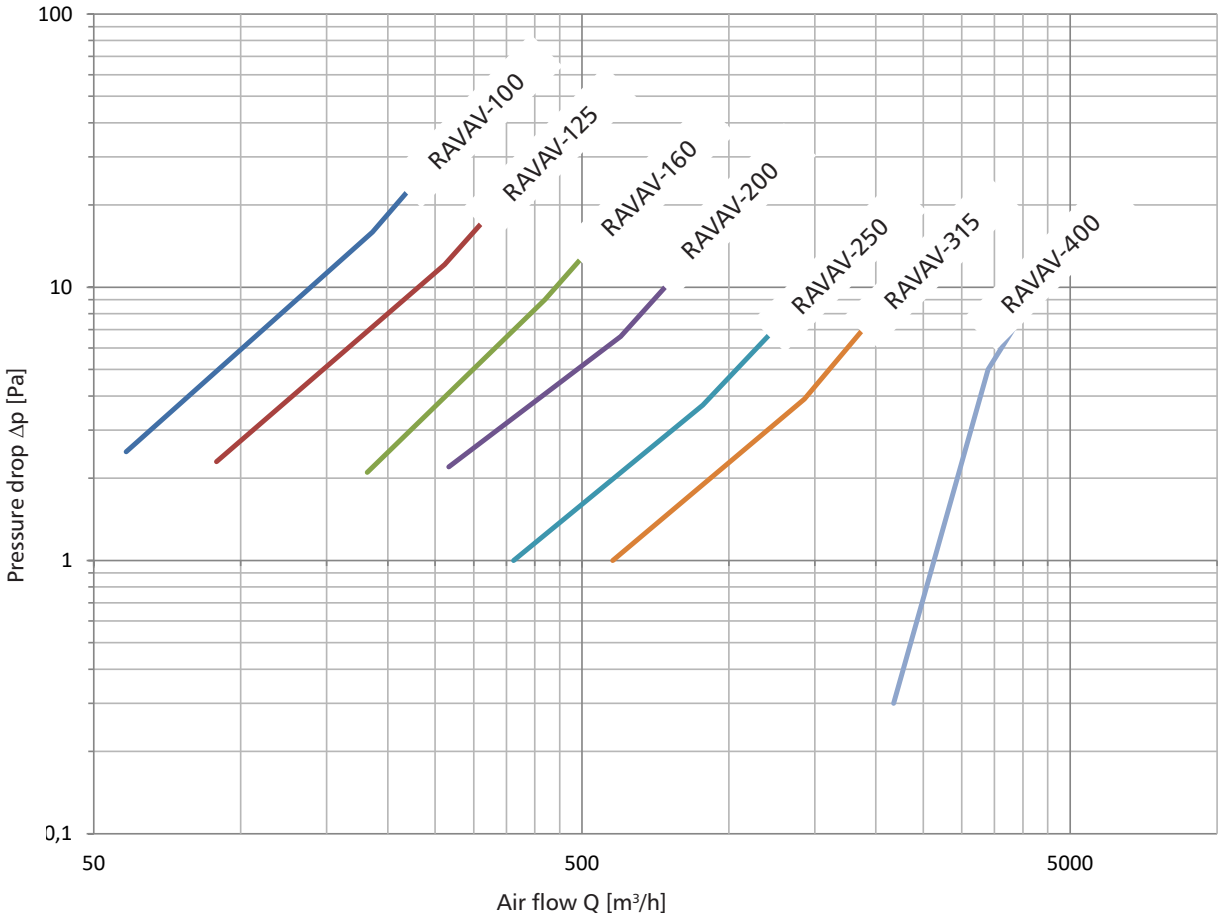

Pressure drop in RAVAV regulator with fully opened damper

Standard air flows of the RAVAV regulator

DN	*Air flow [m³/h]*		
	min. (2 [m/s])	*max. (12 [m/s])*	*nom. (12 [m/s])*
100	53	316	316
125	83	501	501
150	121	728	728
160	139	831	831
200	218	1309	1309
250	342	2053	2053
300	495	2971	2971
315	546	3277	3277
355	695	4173	4173
400	884	5305	5305
500	1386	8314	8314
630	2209	13254	13254

ALNOR® ventilation systems
is a legally protected trademark and technical patent. All rights reserved.

VAV flow regulator

RAVAV

Pressure drops

Pressure drop and level of sound power emitted to the system for different damper settings

DN	v	q		α = 15°											α = 30°										
				Δp	L_W [dB/Okt] f_m [Hz]								L_W [dB]	L_{WA} [dB(A)]	Δp	L_W [dB/Okt] f_m [Hz]								L_W [dB]	L_{WA} [dB(A)]
	[m/s]	[m³/h]	[l/s]	[Pa]	63	125	250	500	1000	2000	4000	8000			[Pa]	63	125	250	500	1000	2000	4000	8000		
100	2	53	15	3	0	0	0	-1	-1	-8	-15	-23	7	2	10	8	8	8	8	8	4	-4	-11	15	11
	4	105	29	14	18	18	18	18	17	17	10	3	26	23	39	27	27	26	26	26	26	22	15	34	31
	6	158	44	30	29	29	29	28	28	28	26	18	37	34	87	37	29	29	28	28	28	26	18	40	34
	8	211	59	54	37	36	36	36	36	36	35	28	45	42	155	45	45	45	44	44	44	44	40	53	51
	10	263	73	85	42	42	42	42	42	41	41	37	50	48	242	51	51	50	50	50	50	50	49	59	57
	12	316	88	122	47	47	47	47	46	46	46	44	55	53	348	56	55	55	55	55	55	54	54	64	62
125	2	83	23	3	2	2	2	1	0	-8	-16	-24	8	3	10	10	10	10	10	10	4	-4	-12	17	13
	4	167	46	14	20	20	20	20	19	18	10	2	27	24	39	29	28	28	28	28	28	22	14	36	33
	6	250	70	30	31	31	30	30	30	30	25	17	38	35	87	39	39	39	39	39	38	37	29	47	44
	8	334	93	54	38	38	38	38	38	37	36	28	46	43	155	39	39	39	39	39	38	37	29	47	44
	10	417	116	85	44	44	44	44	44	43	43	36	52	50	242	53	53	52	52	52	52	52	48	61	58
	12	501	139	122	49	49	49	49	48	48	48	43	57	55	348	58	57	57	57	57	57	56	55	66	63
160	2	139	38	3	4	4	4	3	-1	-9	-17	-24	10	4	10	13	12	12	12	11	3	-5	-12	19	14
	4	277	77	14	22	22	22	22	22	17	9	2	29	25	39	31	31	30	30	30	29	21	13	38	35
	6	416	115	30	33	33	33	32	32	32	24	17	40	37	87	41	41	41	41	41	40	36	29	49	46
	8	554	154	54	41	40	40	40	40	40	35	27	48	45	155	49	49	49	48	48	48	47	39	57	54
	10	693	192	85	46	46	46	46	46	45	43	36	54	51	242	55	55	55	54	54	54	54	48	63	60
	12	831	231	122	51	51	51	51	50	50	50	42	59	57	348	60	60	59	59	59	59	58	54	68	65
200	2	218	61	3	6	6	6	5	-1	-9	-17	-25	12	5	10	14	14	14	14	10	3	-5	-13	21	15
	4	436	121	14	24	24	24	24	23	19	11	3	31	27	39	33	32	32	32	32	29	21	13	40	36
	6	654	182	30	35	35	35	34	34	32	24	16	42	38	87	43	43	43	43	43	42	36	28	51	48
	8	872	242	54	43	42	42	42	42	41	35	27	50	47	155	51	51	51	50	50	50	47	39	59	56
	10	1091	303	85	48	48	48	48	48	47	43	35	56	53	242	57	57	56	56	56	56	55	47	65	62
	12	1309	364	122	53	53	53	53	52	52	50	42	61	58	348	62	61	61	61	61	61	60	54	70	67
250	2	342	95	3	8	8	7	6	-2	-10	-18	-25	13	5	10	16	16	16	16	10	2	-6	-13	22	16
	4	684	190	14	26	26	26	26	24	16	8	0	33	27	39	35	34	34	34	34	28	20	12	41	37
	6	1027	285	30	37	37	36	36	36	31	23	16	44	39	87	45	45	45	45	44	43	35	28	52	49
	8	1369	380	54	44	44	44	44	44	42	34	26	52	48	155	53	53	52	52	52	52	46	38	60	57
	10	1711	475	85	50	50	50	50	49	49	42	35	58	55	242	59	59	58	58	58	58	54	47	66	63
	12	2053	570	122	55	55	55	54	54	54	49	41	63	60	348	64	63	63	63	63	62	61	53	71	69
315	2	546	152	3	10	10	9	5	-3	-10	-18	-26	15	6	10	18	18	18	17	9	2	-6	-14	24	17
	4	1092	303	14	28	28	28	27	23	15	8	0	34	28	39	37	36	36	36	35	27	20	12	43	38
	6	1639	455	30	39	39	38	38	38	31	23	15	46	41	87	47	47	47	47	46	43	35	27	54	50
	8	2185	607	54	46	46	46	46	46	41	34	26	53	49	155	55	55	54	54	54	53	45	38	62	59
	10	2731	759	85	52	52	52	52	51	50	42	34	59	56	242	61	60	60	60	60	60	54	46	68	65
	12	3277	910	122	57	57	57	56	56	56	49	41	64	61	348	66	65	65	65	65	64	61	53	73	70
400	2	884	246	3	12	12	11	5	-3	-11	-19	-27	17	6	10	20	20	20	17	9	1	-7	-15	26	17
	4	1768	491	14	30	30	30	29	23	15	7	-1	36	29	39	39	38	38	38	35	27	19	11	45	39
	6	2652	737	30	41	41	40	40	38	30	22	14	47	42	87	49	49	49	49	48	42	34	26	56	51
	8	3536	982	54	48	48	48	48	48	41	33	25	55	51	155	57	57	56	56	56	53	45	37	64	60
	10	4420	1228	85	54	54	54	54	53	49	41	33	61	57	242	63	63	62	62	62	61	53	45	70	67
	12	5305	1473	122	59	59	59	58	58	56	48	40	66	62	348	68	67	67	67	67	66	60	52	75	72

ALNOR® ventilation systems
is a legally protected trademark and technical patent. All rights reserved.

Pressure drops

Pressure drop and level of sound power emitted to the system for different damper settings

DN	v	q		α = 45°											α = 60°										
				Δp	L_W [dB/Okt]								L_W [dB]	L_{WA} [dB(A)]	Δp	L_W [dB/Okt]								L_W [dB]	L_{WA} [dB(A)]
					f_m [Hz]											f_m [Hz]									
	[m/s]	[m³/h]	[l/s]	[Pa]	63	125	250	500	1000	2000	4000	8000			[Pa]	63	125	250	500	1000	2000	4000	8000		
100	2	53	15	41	19	19	18	18	18	18	11	3	26	23	206	33	33	33	33	33	32	32	24	41	39
	4	105	29	165	37	37	37	36	36	36	36	29	45	43	823	52	51	51	51	51	51	50	50	60	58
	6	158	44	370	48	48	47	47	47	47	47	44	56	53	1851	62	48	47	47	47	47	47	44	63	54
	8	211	59	658	55	55	55	55	55	54	54	54	64	61	3291	70	70	70	69	69	69	69	68	78	76
	10	263	73	1029	61	61	61	61	60	60	60	60	70	67	5143	76	76	75	75	75	75	75	74	84	82
	12	316	88	1481	66	66	66	65	65	65	65	65	74	72	7405	81	80	80	80	80	80	79	79	89	87
125	2	83	23	41	21	21	20	20	20	18	11	3	28	24	206	35	35	35	35	35	34	31	23	43	40
	4	167	46	165	39	39	39	38	38	38	36	29	47	44	823	54	53	53	53	53	53	52	49	62	59
	6	250	70	370	50	49	49	49	49	49	48	44	58	55	1851	64	64	64	64	63	63	63	63	73	70
	8	334	93	658	57	57	57	57	56	56	56	55	65	63	3291	64	64	64	64	63	63	63	63	73	70
	10	417	116	1029	63	63	63	63	62	62	62	62	71	69	5143	78	78	77	77	77	77	77	76	86	84
	12	501	139	1481	68	68	68	67	67	67	67	67	76	74	7405	83	82	82	82	82	82	81	81	91	89
160	2	139	38	41	23	23	22	22	22	18	10	2	30	26	206	37	37	37	37	37	36	31	23	45	42
	4	277	77	165	41	41	41	41	40	40	36	28	49	46	823	56	56	55	55	55	55	54	49	64	61
	6	416	115	370	52	52	51	51	51	51	51	43	60	57	1851	66	66	66	66	66	65	65	64	75	72
	8	554	154	658	59	59	59	59	59	58	58	54	67	65	3291	74	74	74	73	73	73	73	73	82	80
	10	693	192	1029	65	65	65	65	64	64	64	62	73	71	5143	80	80	79	79	79	79	79	78	88	86
	12	831	231	1481	70	70	70	69	69	69	69	69	78	76	7405	85	84	84	84	84	84	83	83	93	91
200	2	218	61	41	25	25	24	24	24	17	10	2	32	27	206	39	39	39	39	39	38	30	22	47	43
	4	436	121	165	43	43	43	42	42	42	38	30	51	48	823	58	57	57	57	57	57	56	48	66	63
	6	654	182	370	54	54	53	53	53	53	50	43	61	59	1851	68	68	68	68	67	67	67	63	76	74
	8	872	242	658	61	61	61	61	60	60	60	53	69	67	3291	76	76	75	75	75	75	75	74	84	82
	10	1091	303	1029	67	67	67	67	66	66	66	62	75	73	5143	82	82	81	81	81	81	81	80	90	88
	12	1309	364	1481	72	72	72	71	71	71	71	69	80	78	7405	87	86	86	86	86	86	85	85	95	93
250	2	342	95	41	27	26	26	26	25	17	9	1	33	28	206	41	41	41	41	40	37	30	22	48	44
	4	684	190	165	45	45	45	44	44	43	35	27	52	49	823	60	59	59	59	59	58	55	48	67	64
	6	1027	285	370	56	55	55	55	55	55	50	42	63	60	1851	70	70	70	70	69	69	69	63	78	76
	8	1369	380	658	63	63	63	63	62	62	61	53	71	68	3291	78	78	77	77	77	77	77	74	86	83
	10	1711	475	1029	69	69	69	68	68	68	68	61	77	75	5143	84	83	83	83	83	83	82	82	92	90
	12	2053	570	1481	74	74	73	73	73	73	73	68	82	79	7405	88	88	88	88	88	87	87	87	97	94
315	2	546	152	41	29	28	28	28	24	16	8	1	35	29	206	43	43	43	43	42	37	29	21	50	46
	4	1092	303	165	47	47	46	46	46	42	34	26	54	50	823	61	61	61	61	61	60	55	47	69	66
	6	1639	455	370	58	57	57	57	57	57	49	42	65	62	1851	72	72	72	72	71	71	70	62	80	77
	8	2185	607	658	65	65	65	65	64	64	60	52	73	70	3291	80	80	79	79	79	79	79	73	88	85
	10	2731	759	1029	71	71	71	70	70	70	68	61	79	76	5143	86	85	85	85	85	85	84	81	94	91
	12	3277	910	1481	76	76	75	75	75	75	75	67	84	81	7405	90	90	90	90	90	89	89	88	99	96
400	2	884	246	41	31	30	30	30	23	16	8	0	37	30	206	45	45	45	45	44	36	28	21	52	47
	4	1768	491	165	49	49	48	48	48	41	34	26	56	51	823	64	63	63	63	63	62	54	47	71	68
	6	2652	737	370	60	59	59	59	59	57	49	41	67	63	1851	74	74	74	74	73	73	69	62	82	79
	8	3536	982	658	67	67	67	67	66	66	60	52	75	71	3291	82	82	81	81	81	81	80	72	90	87
	10	4420	1228	1029	73	73	73	72	72	72	68	60	81	78	5143	88	87	87	87	87	87	86	81	96	93
	12	5305	1473	1481	78	78	77	77	77	77	75	67	86	83	7405	92	92	92	92	92	91	91	88	101	98

ALNOR® ventilation systems
is a legally protected trademark and technical patent. All rights reserved.

VAV flow regulator

RAVAV

Servomotor specification

RAVAV regulators are supplied with the Belimo Compact control mechanism with standard running times, where the operating parameters are set at the stage of regulator calibration by the manufacturer. Technical data of servomotors:

Symbol	LMV-D3-MP	NMV-D3-MP
Nominal voltage	24 V AC, 50/60 Hz 24 V DC	
Operating range	19,2 … 28,8 V AC 21,6 … 28,8 V DC	
Nominal power	4 VA (max 8 A for 5 ms)	5 VA (max 8 A for 5 ms)
Power consumption	2 W	3 W
Resistance class	III (safe voltage - low)	
Insulation class	IP54	
Electromagnetic compatibility	CE acc. to 89/336/EEC	
Ambient temperature	0 … +50˚C	
Ambient humidity	5 ... 95% relative humidity, no condensation (as per EN 60730-1)	
Maintenance	maintenance-free	
Standard control		
VAV mode with Y lead signal (terminal 3)	2 ... 10 V DC / (4 ... 20 mA with 500 Ω resistor), min input impedance 100 kΩ	
	0 ... 10 V DC / (0 ... 20 mA with 500 Ω resistor), min input impedance 100 kΩ	
	possible settings 0 ... 10 V DC, min input impedance 100 kΩ	
Operating mode for measuring signal U5 (terminal 5)	2 … 10 V DC,max 0,5 mA	
	0 … 10 V DC, max 0,5 mA	
	adjustable: volumetric flow, damper position or differential pressure, max 0,5 mA	
CAV operating modes	CLOSED / Vmin. / (Vav. *) / Vmax / OPEN * (* only with 24 V AC power supply	
MP bus functions		
Bus address	MP1 … 8 (standard operation: PP)	
LONWORKS® / EIB-Konnex / MODBUS RTU / BACnet	with BELIMO UK24LON / UK24EIB / UK24MOD / UK24BAC, 1 to 8 Belimo MP devices (VAV regulator / damper or valve servomotor)	
DDC regulator	DDC regulator / PLC with integral MP bud interface, various manufacturers	
Adjusting ventilator speed	with BELIMO COU24-A-MP regulator	
Connecting the sensor	passive (PT1000, Ni1000, etc.) and active sensor with 0...10 V input signal, e.g. temperature, humidity sensor	
	two-state signal (contact load capacity 16 mA / 24V) e.g. switches, presence sensors	

It is also possible to provide regulators with actuators integrated for KNX, LON, MODBUS communication.

ALNOR® ventilation systems
is a legally protected trademark and technical patent. All rights reserved.

Connections diagram

VAV – analogue reference signa:

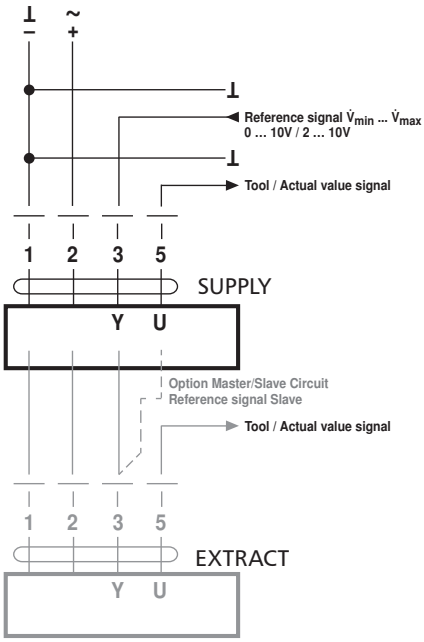

VAV – with shutt-off (closed), 2 ... 10V mode:

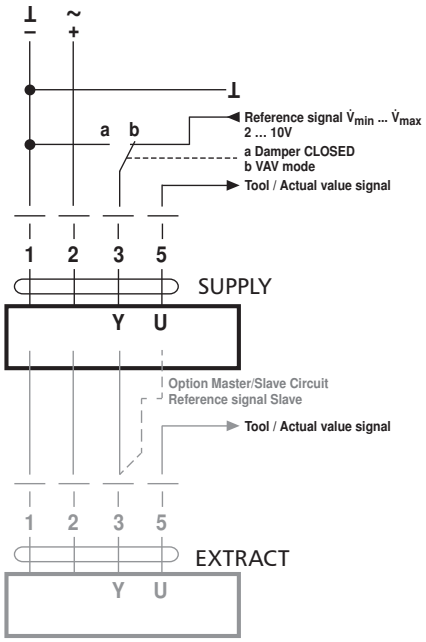

Damper CLOSED via 0 ... 10 V reference signal
(Mode 2 ... 10 V)

Function	*Standard: 0,1V*	*Shut-off level: 0,5 V*
Damper CLOSED	< 0,1V	< 0,5V
V_{min}	> 0,1 ... 2V	> 0,5 ... 2V
V_{min} ... V_{max}	2 ... 10V	2 ... 10V

CAV - step mode CLOSED / V_{min} / V_{mid} / V_{max} / OPEN

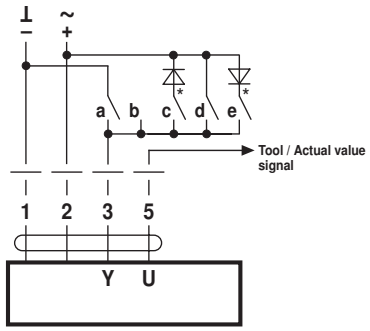

Note!
1. Note that the contacts are mutually interlocking.
2. DC supply: C and E are not available with DC 24 V

CAV Function CLOSED – V̇min – V̇max – OPEN (standard)

	a	b	c	d	e
Signal	⊥ –		~	~ +	~
Switching terminal 3	3	3	3	3	3
Mode 2 ... 10 V	CLOSED	V̇min	CLOSED *	V̇max	OPEN *
Mode 0 ... 10 V	V̇min	V̇min	CLOSED *	V̇max	OPEN *

PC-Tool "CAV Function" setting:
2 ... 10 V, Shut-off level 0.1 V

PC-Tool "CAV Function" setting:
CLOSED – V̇min – V̇max. Shut-off level CLOSED: 0.1 V

CAV function CLOSED – V̇min – V̇mid – V̇max – OPEN

	a	b	c	d	e
Signal	⊥ –		~	~ +	~
Switching terminal 3	3	3	3	3	3
Mode 2 ... 10 V	CLOSED	V̇min	V̇mid *	V̇max	OPEN *
Mode 0 ... 10 V	V̇min	V̇min	V̇mid *	V̇max	OPEN *

PC-Tool "CAV Function" setting:
CLOSED – V̇min – V̇mid – V̇max (NMV-D2M compatible)

ALNOR® ventilation systems
is a legally protected trademark and technical patent. All rights reserved.

VAV flow regulator
RAVAV

RAVAV-G regulators are supplied with 227VM-024-05 (227VM-024-10) servomotors, where the operating parameters are preset at the stage of regulator calibration by the manufacturer. It is possible to adjust the settings without additional tools, after the regulator is installed in the system. Technical data of servomotors:

Symbol	227VM-024-05	227VM-024-10
Nominal voltage	24V AC/DC	
Operating range	19 ... 29V AC/DC	
Power consumption	2,5W (operation), 1,0 (standby)	2,5 W (operation), 1,5 W (standby)
Resistance class	III (safe voltage - low)	
Casing insulation class	IP42	
Electromagnetic compatibility	CE (2004/108/EG)	
Ambient temperature	0 ... +50˚C	
Ambient humidity	5 ... 95% % relative humidity, no condensation (as per EN 60730-1)	
Maintenance	maintenance-free	

Connection diagram RAVAV-G

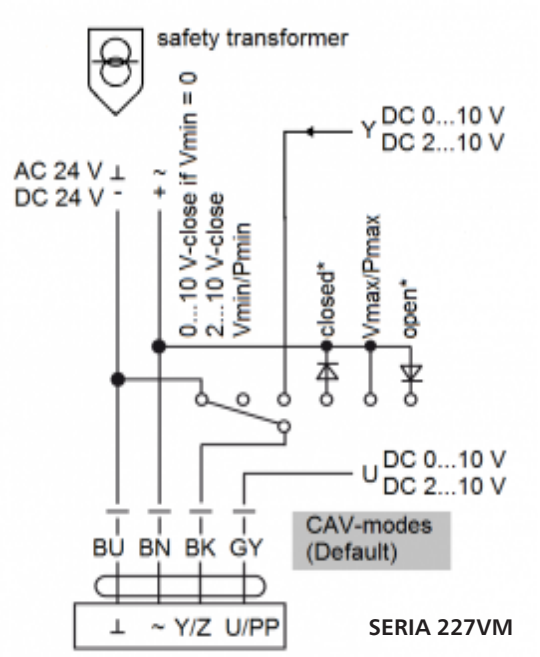

ALNOR® ventilation systems
is a legally protected trademark and technical patent. All rights reserved.

Servomotor user manual



Front panel:
1. Disengagement button (self-restoring)
2. Value selection knob
3. Function selection knob
4. Display

The manual refers to the operation of RAVAV-G regulator servomotor (series 227VM)

The display shows values in accordance with selected function. Apart from digital values, the square symbols located by the display right edge indicate the active flow unit (m^3/h or l/s) of selected diagnostic function.
A specific function is selected using the function selection knob (3), and values for specific functions are selected using the value selection knob (2).
If no function is selected, the display will show three horizontal dashes (- - -).
After setting a desired value, its saving is confirmed with double blink of the displayed symbols.

Function selection:
1.FLOW function
Current flow in m^3/h or l/s is displayed. The displayed value is consistent with the value of measurement signal U (2-10 VDC or 0-10 VDC). By turning the value selection knob, it is possible to choose between flow units (m^3/h or l/s).

2.Vmin function
It enables to set the required minimum flow for the external lead signal Y=0 V or Y=2 V. By turning the value selection knob, it is possible to set the required V_{min}.

3.Vmax function
It enables to set the required maximum flow for the external lead signal Y=10 V. By turning the value selection knob, it is possible to set the required V_{max}.

4.MODE function
It enables to set the rotation direction (clockwise or counterclockwise) and the input range (0-10 V or 2-10 VDC) for lead signal Y. The range of measurement signal U corresponds to lead signal Y.
- 0 - n - 0-10 V, clockwise (CW)
- 0 - i - 0-10 V, counterclockwise (CCW)
- 2 - n - 2-10 V, clockwise (CW)
- 2 - i - 2-10 V, counterclockwise (CCW)

5.DIAG function
It activates the diagnostic menu. The external lead signal Y is omitted, actions are performed in accordance with the function chosen using the value selection knob. Diagnostic functions are automatically deactivated after 10 hours. In the Diag mode, the display blinks, showing the current flow for 8 seconds and the selected function for 2 seconds.
- **oP** **full opening of damper**
- **cL** **full closing of damper**
- **Hi** forcing of Vmax
- **Lo** forcing of Vmin
- **on** test mode ON – servomotor remains in current position
- **oFF** test mode OFF – servomotor operates in line with the external lead signal Y (the signal is presented as 0 – 100 x 10-1 V)

6.Vnom function
It enables to set the V_{nom} value (nominal flow) which corresponds to the differential pressure of 86 Pa measured at the metering system (or another value depending on the maximum speed of air flow through the regulator). The value is factory-set and adjusted by the regulator manufacturer during calibration.

ALNOR® ventilation systems
is a legally protected trademark and technical patent. All rights reserved.

Rectangular VAV flow regulator

RAVAV-Q

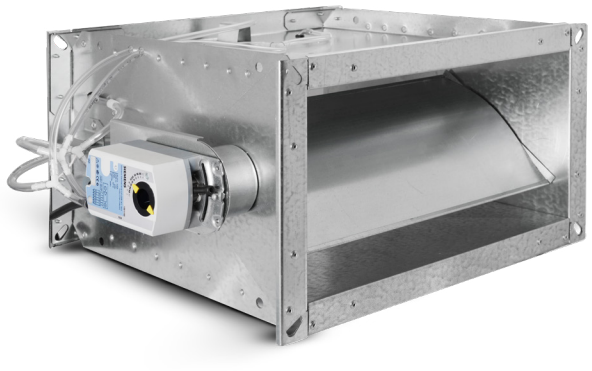

Description

The RAVAV-Q regulator is dedicated for forced ventilation systems and is an important component for installations with variable air flow.

The regulator casing is made of Z275 galvanized sheet. Optionally, it is possible to use the 1.4301 stainless steel to build the casing. Inside the casing profiled and insulated (mineral wool) damper blade (non-airtight). The actuator is installed on the control unit casing so as to allow for thermal insulation of the system. The regulator is also available in the version insulated housing with 50 mm of mineral wool enclosed in galvanised steel shield.
The measuring system based on aluminium impact pressure tubes and pressure relieve stub pipes ensures reliable measuring of the air flow.
Sensor, digital control unit and servomotor are integrated in one device. The servomotor adjusts the damper position, the control unit compares the current air flow rate with the set value and the sensor turns the differential pressure value into electric signal. It is possible to change standard controller to solution with fastrunning actuator, static pressure sensor, etc

Version: 004/03/20/PG.

Marking example

Product code: **RAVAV-Q - aaa - bbb - ccc - ddd**

type
material
insulation
control mechanism
diameter

Dimensions

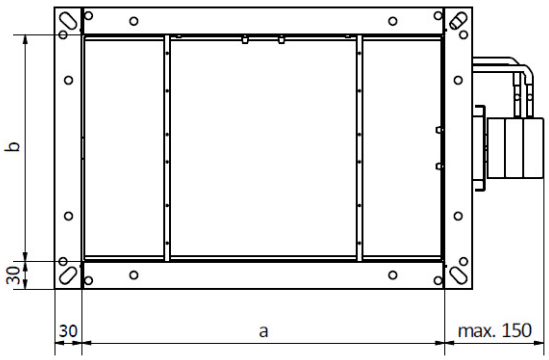

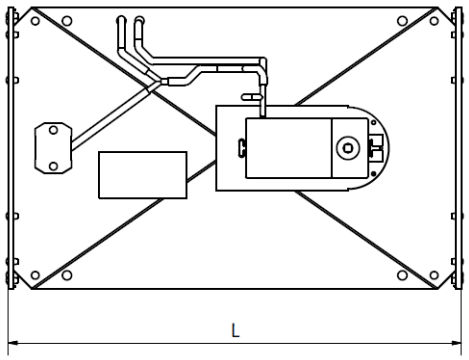

b [mm]	a [mm]									
	100	200	300	400	500	600	700	800	900	1000
100	400	400	400	400	400	400	400	400	400	400
200	-	400	400	400	400	400	400	400	400	400
300	-	-	500	500	500	500	500	500	500	500
400	-	-	-	500	500	500	500	500	500	500

Lenght *L [mm]* RAVAV-Q.

b [mm]	a [mm]									
	100	200	300	400	500	600	700	800	900	1000
100	2,6	3,3	4	4,6	5,3	7,3	8,1	9	9,8	10,6
200	-	4,1	4,8	5,6	6,4	8,7	9,6	10,5	11,5	12,4
300	-	-	6,6	7,6	8,6	11,6	12,8	14	15,2	16,4
400	-	-	-	8,7	9,8	13,1	14,4	15,7	17	18,3

Weights RAVAV-Q [kg].

ALNOR® ventilation systems
is a legally protected trademark and technical patent. All rights reserved.

Rectangular VAV flow regulator

RAVAV-Q

Ordering options

Material:

RAVAV-Q-...	- default: galvanised steel
RAVAV-Q-K-...	- 1.4301/304

Insulation:

RAVAV-Q-...	- default: not insulated
RAVAV-Q-I-...	- insulation with external shield, thickness: 30 mm
RAVAV-Q-K-I-...	- steel 1.4301/304, insulation with external shield, thickness 30 mm

Control mechanism:

RAVAV-Q-...	- Belimo servomotor, with communication MP-BUS 5Nm, standard operating time LMV-D3-MP (default)
RAVAV-Q-LON	- Belimo servomotor, with communication LONWORKS, 5Nm, standard operating time LMV-D3-LON
RAVAV-Q-MOD	- Belimo servomotor, with communication MODBUS, 5Nm, standard operating time LMV-D3-MOD
RAVAV-Q-KNX	- Belimo servomotor, with communication KNX, 5Nm, standard operating time LMV-D3-KNX
RAVAV-Q-G	- Gruner servomotor, with communication PP-BUS, 5Nm 15...120s 227VM(Z)-024-05(/8E8)
RAVAV-Q-SIM	- Siemens servomotor, without communication protocol, 5Nm, 150s - GDB181.1E/3

Diameter:

Regulators are available in size range 100x100 – 1000x400 [mm]..

*__Additional options:__

V_{min} - flow minimum [m³/h (range 0-100% V_{nom})
V_{max} - flow maximum [m³/h] (range 20-100% V_{nom})
0-10 (or different) - control signal (default 2-10 V)

*Please specify non-standard settings, when placing an order.

Code example:
RAVAV-Q-K-I-KNX-400x200

The manufacturer reserves the right to make changes.

Characteristics

- High air flow measurement accuracy
- Casing tightness is class C as per EN-1751:2014-03
- Operating temperature range from 0 to 50 [°C],
- Differential pressure range measured before and after the regulator 50-1000Pa.
- Possibility to measure current air flow parameters using external micromanometers

Recommended minimum distances

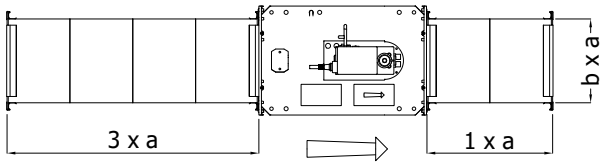

Operating diagram

Sensor, control unit and servomotor are integrated in one device. The servomotor adjusts the damper position, the control unit compares the current air flow rate with the set value and the sensor turns the differential pressure value into electric signal.

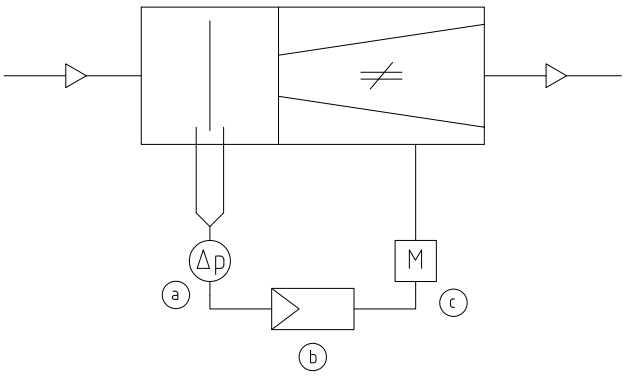

a - sensor b - digital control c - serwomotor

ALNOR® ventilation systems
is a legally protected trademark and technical patent. All rights reserved.

Rectangular VAV flow regulator

RAVAV-Q

Air flow

Standard air flow rates RAVAV-Q (min: 2 [m/s], max: 12 [m/s]).

b	V		a									
			100	200	300	400	500	600	700	800	900	1000
100	m^3/h	min	72	144	216	288	360	432	504	576	648	720
		max	432	864	1296	1728	2160	2592	3024	3456	3888	4320
	l/s	min	20	40	60	80	100	120	140	160	180	200
		max	120	240	360	480	600	720	840	960	1080	1200
200	m^3/h	min	-	288	432	576	720	864	1008	1152	1296	1440
		max	-	1728	2592	3456	4320	5184	6048	6912	7776	8640
	l/s	min	-	80	120	160	200	240	280	320	360	400
		max	-	480	720	960	1200	1440	1680	1920	2160	2400
300	m^3/h	min	-	-	648	864	1080	1296	1512	1728	1944	2160
		max	-	-	3888	5184	6480	7776	9072	10368	11664	12960
	l/s	min	-	-	180	240	300	360	420	480	540	600
		max	-	-	1080	1440	1800	2160	2520	2880	3240	3600
400	m^3/h	min	-	-	-	1152	1440	1728	2016	2304	2592	2880
		max	-	-	-	6912	8640	10368	12096	13824	15552	17280
	l/s	min	-	-	-	320	400	480	560	640	720	800
		max	-	-	-	1920	2400	2880	3360	3840	4320	4800

Pressure drops

The graph below shows the dependence of the pressure drop on the air flow

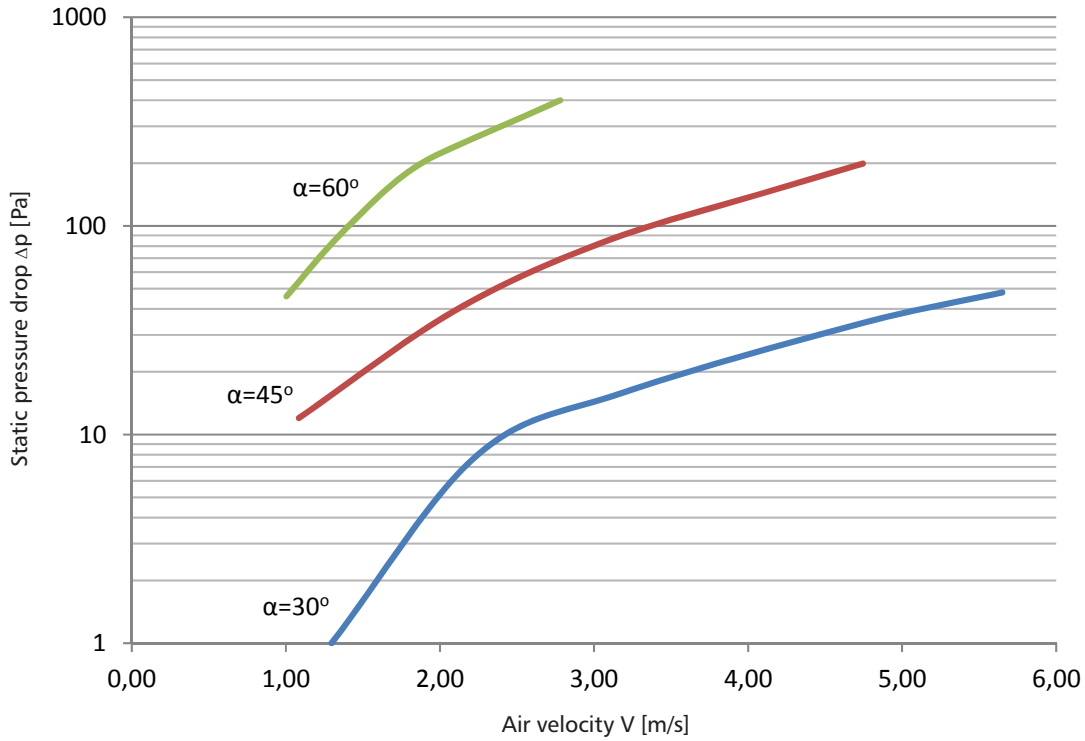

ALNOR® ventilation systems
is a legally protected trademark and technical patent. All rights reserved.

Pressure drop and level of sound power emitted to the system for different damper settings

Δp	b	v	L_{WA} [dB(A)]									
			a									
[Pa]	[mm]	[m/s]	[mm]									
			100	200	300	400	500	600	700	800	900	1000
50	100	2	30	33	35	36	37	38	38	39	40	40
		4	39	42	43	45	46	46	47	48	48	49
		6	43	46	48	49	50	51	52	52	53	53
		8	47	50	52	53	54	55	55	56	56	57
		10	50	53	54	56	57	57	58	59	59	60
		12	52	55	57	58	59	60	61	61	62	62
	200	2	-	34	36	37	38	39	39	40	40	41
		4	-	43	45	46	47	48	48	49	49	50
		6	-	48	50	51	52	53	53	54	54	55
		8	-	51	53	54	55	56	57	57	58	58
		10	-	54	56	57	58	59	60	60	61	61
		12	-	57	59	60	61	62	63	63	64	64
	300	2	-	-	35	37	38	38	39	40	40	41
		4	-	-	45	46	47	48	49	49	50	50
		6	-	-	50	51	52	53	53	54	55	55
		8	-	-	53	55	56	56	57	58	58	59
		10	-	-	57	58	59	60	60	61	61	62
		12	-	-	60	61	62	63	63	64	64	65
	400	2	-	-	-	37	38	38	39	40	40	41
		4	-	-	-	46	51	48	48	49	50	50
		6	-	-	-	51	56	53	54	54	55	55
		8	-	-	-	55	59	57	58	58	59	59
		10	-	-	-	58	62	60	61	61	62	62
		12	-	-	-	61	64	63	64	64	65	65
100	100	2	36	39	41	42	43	44	45	45	46	46
		4	44	47	49	50	51	52	52	53	53	54
		6	49	52	54	55	56	57	58	58	59	59
		8	52	55	57	58	59	60	61	61	62	62
		10	55	58	59	61	62	62	63	64	64	65
		12	57	60	62	63	64	65	65	66	66	67
	200	2	-	40	42	43	44	45	46	46	47	47
		4	-	48	50	51	52	53	54	54	55	55
		6	-	54	56	57	58	59	59	60	60	61
		8	-	57	59	60	61	62	62	63	63	64
		10	-	59	61	62	63	64	65	65	66	66
		12	-	62	64	65	66	67	67	68	68	69
	300	2	-	-	43	44	45	46	46	47	48	48
		4	-	-	50	52	53	53	54	55	55	56
		6	-	-	56	57	58	59	60	60	61	61
		8	-	-	59	61	62	62	63	64	64	65
		10	-	-	62	63	64	65	66	66	67	67
		12	-	-	65	66	67	68	68	69	69	70
	400	2	-	-	-	43	44	45	46	46	47	47
		4	-	-	-	52	53	54	55	55	56	56
		6	-	-	-	58	59	59	60	61	61	62
		8	-	-	-	61	62	63	63	64	64	65
		10	-	-	-	63	64	65	66	66	67	67
		12	-	-	-	66	67	68	68	69	69	70

ALNOR® ventilation systems
is a legally protected trademark and technical patent. All rights reserved.

Rectangular VAV flow regulator
RAVAV-Q

Pressure drop and level of sound power emitted to the system for different damper settings

Δp	b	v	L_{WA} [dB(A)]									
			a									
[Pa]	[mm]	[m/s]	[mm]									
			100	200	300	400	500	600	700	800	900	1000
150	100	2	40	43	45	46	47	48	49	49	50	50
		4	47	50	52	53	54	55	56	56	57	57
		6	52	55	57	58	59	60	60	61	62	62
		8	56	59	60	62	63	63	64	65	65	66
		10	58	61	63	64	65	66	66	67	67	68
		12	60	63	65	66	67	68	68	69	69	70
	200	2	-	45	47	48	49	50	50	51	51	52
		4	-	52	54	55	56	57	57	58	58	59
		6	-	57	58	60	61	61	62	63	63	64
		8	-	60	62	63	64	65	66	67	67	67
		10	-	63	65	66	67	68	68	69	69	70
		12	-	65	67	68	69	70	70	71	71	72
	300	2	-	-	47	48	49	50	51	51	52	52
		4	-	-	54	55	56	57	57	58	59	59
		6	-	-	59	60	61	62	63	63	64	64
		8	-	-	63	65	66	66	67	68	68	69
		10	-	-	66	67	68	69	69	70	70	71
		12	-	-	68	69	70	71	71	72	72	73
	400	2	-	-	-	48	49	50	51	51	52	52
		4	-	-	-	56	56	57	58	59	59	59
		6	-	-	-	61	62	62	63	64	64	65
		8	-	-	-	65	66	66	67	68	68	69
		10	-	-	-	67	68	69	69	70	71	71
		12	-	-	-	69	70	71	72	72	73	73
200	100	2	44	47	48	50	51	52	52	53	53	54
		4	49	52	54	55	56	57	58	58	59	59
		6	54	57	59	60	61	62	63	63	64	64
		8	58	61	63	64	65	66	66	67	67	68
		10	60	63	65	66	67	68	69	69	70	70
		12	62	65	67	68	69	70	71	71	72	72
	200	2	-	48	50	51	52	53	54	54	55	55
		4	-	54	56	57	58	59	60	60	61	61
		6	-	59	61	62	63	64	64	65	65	66
		8	-	63	64	66	67	67	68	69	69	70
		10	-	65	67	68	69	70	71	71	72	72
		12	-	67	69	70	71	72	73	73	74	74
	300	2	-	-	50	51	52	53	54	54	55	55
		4	-	-	56	58	59	59	60	61	61	62
		6	-	-	62	63	64	65	65	66	66	67
		8	-	-	65	67	68	69	69	70	70	71
		10	-	-	68	69	70	71	72	72	73	73
		12	-	-	70	71	72	73	74	74	75	75
	400	2	-	-	-	52	53	54	54	55	55	56
		4	-	-	-	58	59	60	60	61	61	62
		6	-	-	-	63	64	65	65	66	66	67
		8	-	-	-	67	68	69	69	70	70	71
		10	-	-	-	70	71	71	72	73	73	74
		12	-	-	-	72	73	74	74	75	75	76

ALNOR® ventilation systems
is a legally protected trademark and technical patent. All rights reserved.

Pressure drop and level of sound power emitted to the system for different damper settings

Δp	b	v	L_{WA} [dB(A)]									
			a									
[Pa]	[mm]	[m/s]	[mm]									
			100	200	300	400	500	600	700	800	900	1000
250	100	2	46	49	51	52	53	54	55	55	56	56
		4	51	54	56	57	58	59	60	60	61	61
		6	56	59	61	62	63	64	64	65	65	66
		8	59	62	64	65	66	67	68	68	69	69
		10	62	65	67	68	69	70	71	71	72	72
		12	64	67	69	70	71	72	73	73	74	74
	200	2	-	51	53	54	55	56	56	57	57	58
		4	-	56	58	59	60	61	61	62	63	63
		6	-	61	62	64	65	65	66	67	67	68
		8	-	64	66	67	68	69	70	70	71	71
		10	-	67	69	71	71	72	73	74	74	74
		12	-	69	71	72	73	74	75	75	76	76
	300	2	-	-	53	54	55	56	57	57	58	58
		4	-	-	58	60	61	61	62	63	63	64
		6	-	-	63	65	66	66	67	68	68	69
		8	-	-	67	68	69	70	71	71	72	72
		10	-	-	70	71	72	73	74	74	75	75
		12	-	-	72	73	74	75	76	76	77	77
	400	2	-	-	-	55	56	56	57	58	58	59
		4	-	-	-	60	61	62	62	63	63	64
		6	-	-	-	65	66	66	67	68	68	69
		8	-	-	-	69	70	70	71	72	72	73
		10	-	-	-	72	73	74	74	75	75	76
		12	-	-	-	74	75	76	76	77	77	78
500	100	2	55	58	60	61	62	63	64	64	65	65
		4	58	61	62	64	65	65	66	67	67	68
		6	61	64	66	67	68	69	70	70	71	71
		8	65	68	69	71	72	72	73	74	74	75
		10	67	70	72	73	74	75	76	76	77	77
		12	69	72	74	75	76	77	78	78	79	79
	200	2	-	60	62	63	64	65	66	66	67	67
		4	-	63	64	66	67	67	68	69	69	70
		6	-	66	68	69	70	71	72	72	73	73
		8	-	70	72	73	74	75	75	76	76	77
		10	-	72	74	75	76	77	78	78	79	79
		12	-	75	77	78	79	80	80	81	81	82
	300	2	-	-	63	64	0	66	67	67	68	68
		4	-	-	65	67	0	68	69	70	70	71
		6	-	-	69	70	0	72	73	73	74	74
		8	-	-	72	74	0	75	76	77	77	78
		10	-	-	75	76	0	78	79	79	80	80
		12	-	-	78	79	0	81	81	82	82	83
	400	2	-	-	-	64	65	66	67	67	68	68
		4	-	-	-	67	68	69	69	70	70	71
		6	-	-	-	71	72	73	73	74	74	75
		8	-	-	-	74	75	76	77	77	78	78
		10	-	-	-	77	78	79	80	80	81	81
		12	-	-	-	79	80	81	82	82	83	83

ALNOR® ventilation systems
is a legally protected trademark and technical patent. All rights reserved.

Rectangular VAV flow regulator

RAVAV-Q

Servomotor specification

RAVAV-Q airflow regulators can be supplied with:

1. The Belimo Compact control mechanism with standard running times, where the operating parameters are set at the stage of regulator calibration by the manufacturer.
2. The Gruner 227V / VM control mechanism, where the operating parameters are set at the stage of regulator calibration by the manufacturer. You can adjust the settings without additional tools after the regulator installation.
3. The Siemens GDB..1E series control mechanism, with standard running times, where the operating parameters are set at the stage of regulator calibration by the manufacturer.

Symbol	LMV-D3-MP
Nominal voltage	24 V AC, 50/60 Hz 24 V DC
Operating range	19,2 … 28,8 V AC 21,6 … 28,8 V DC
Power consumption	2 W
Resistance class	III (safe voltage - low)
Insulation class	IP54
Electromagnetic compatibility	CE acc. to 89/336/EEC
Ambient temperature	0 … +50˚C
Ambient humidity	5 ... 95% relative humidity, no condensation (as per EN 60730-1)
Maintenance	maintenance-free
Standard control	
VAV mode with Y lead signal (terminal 3)	2 ... 10 V DC / (4 ... 20 mA with 500 Ω resistor), min input impedance 100 kΩ
	0 ... 10 V DC / (0 ... 20 mA with 500 Ω resistor), min input impedance 100 kΩ
	possible settings 0 ... 10 V DC, min input impedance 100 kΩ
Operating mode for measuring signal U5 (terminal 5)	2 … 10 V DC, maks. 0,5 mA
	0 … 10 V DC, maks. 0,5 mA
	adjustable: volumetric flow, damper position or differential pressure, max 0,5 mA
CAV operating modes	CLOSED / Vmin. / (Vśr. *) / Vmaks. / OPEN * (* onlu with 24 V AC power supply)
MP bus functions	
Bus address	MP1 … 8 (standard operation: PP)
LONWORKS® / EIB-Konnex / MODBUS RTU / BACnet	with BELIMO UK24LON / UK24EIB / UK24MOD / UK24BAC, 1 do 8 Belimo MP devices (VAV regulator / damper or value servomotor)
DDC regulator	DDC regulator / PLC with integral MP bud interface, various manufacturers
Adjusting ventilator speed	with BELIMO COU24-A-MP regulator
Connecting the sensor	passive (PT1000, Ni1000, etc.) and active sensor with 0...10 V input signal, e.g. temperature, humidity sensor
	two-state signal (contact load capacity 16 mA / 24V) e.g. switches, presence sensors

It is also possible to provide regulators with actuators integrated for KNX, LON, MODBUS communication protocol.

ALNOR® ventilation systems
is a legally protected trademark and technical patent. All rights reserved.

Connections diagram Belimo servomotor

VAV – analogue reference signa:

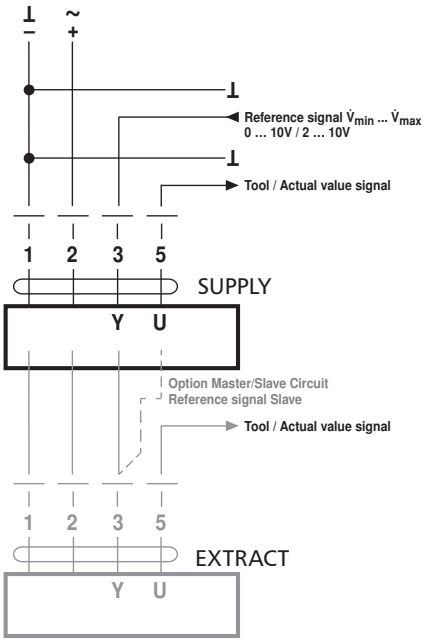

VAV – with shutt-off (closed), 2 ... 10V mode:

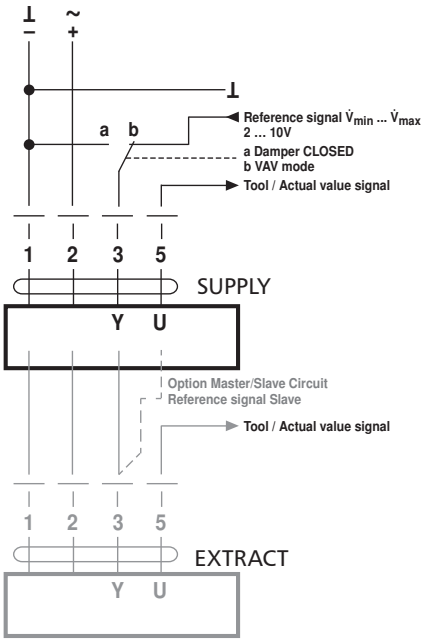

Damper CLOSED via 0 ... 10 V reference signal
(Mode 2 ... 10 V)

Function	*Standard: 0,1V*	*Shut-off level: 0,5 V*
Damper CLOSED	< 0,1V	< 0,5V
V_{min}	> 0,1 ... 2V	> 0,5 ... 2V
V_{min} ... V_{max}	2 ... 10V	2 ... 10V

CAV - step mode CLOSED / V_{min} / V_{mid} / V_{max} / OPEN

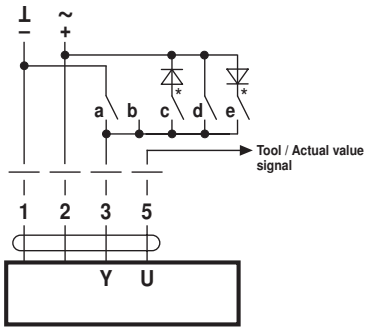

Note!
1. Note that the contacts are mutually interlocking.
2. DC supply: C and E are not available with DC 24 V

CAV Function CLOSED – V̇min – V̇max – OPEN (standard)

	a	b	c	d	e
Signal	⊥ –		~	~ +	~
Switching terminal 3	3	3	3	3	3
Mode 2 ... 10 V	CLOSED	V̇min	CLOSED *	V̇max	OPEN *
Mode 0 ... 10 V	V̇min	V̇min	CLOSED *	V̇max	OPEN *

PC-Tool "CAV Function" setting:
2 ... 10 V, Shut-off level 0.1 V

PC-Tool "CAV Function" setting:
CLOSED – V̇min – V̇max. Shut-off level CLOSED: 0.1 V

CAV function CLOSED – V̇min – V̇mid – V̇max – OPEN

	a	b	c	d	e
Signal	⊥ –		~	~ +	~
Switching terminal 3	3	3	3	3	3
Mode 2 ... 10 V	CLOSED	V̇min	V̇mid *	V̇max	OPEN *
Mode 0 ... 10 V	V̇min	V̇min	V̇mid *	V̇max	OPEN *

PC-Tool "CAV Function" setting:
CLOSED – V̇min – V̇mid – V̇max (NMV-D2M compatible)

ALNOR® ventilation systems
is a legally protected trademark and technical patent. All rights reserved.

Rectangular VAV flow regulator

RAVAV-Q

Gruner servomotor specification

Symbol	227VM-024-05
Nominal voltage	24V AC/DC
Operating range	19 ... 29V AC/DC
Power consumption	2,5W (operation), 1,0 (standby)
Resistance class	III (safe voltage - low)
Casing insulation class	IP42
Electromagnetic compatibility	CE (2004/108/EG)
Ambient temperature	0 ... +50˚C
Ambient humidity	5 ... 95% % relative humidity, no condensation (as per EN 60730-1)
Maintenance	maintenance-free

It is also possible to provide regulators with actuators integrated for MODBUS communication protocol.

Connection diagram

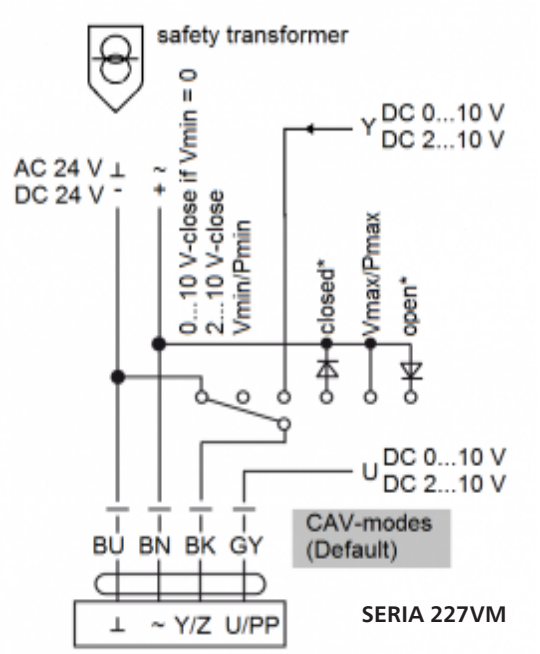

ALNOR® ventilation systems
is a legally protected trademark and technical patent. All rights reserved.

Rectangular VAV flow regulator

RAVAV-Q

Servomotor user manual

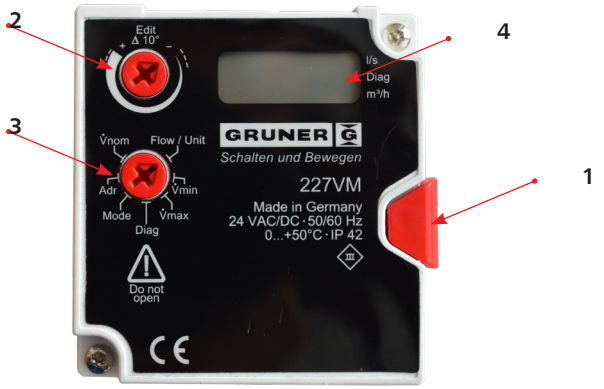

Front panel:
1. Disengagement button (self-restoring)
2. Value selection knob
3. Function selection knob
4. Display

The manual refers to the operation of RAVAV-G regulator servomotor (series 227VM)

The display shows values in accordance with selected function. Apart from digital values, the square symbols located by the display right edge indicate the active flow unit (m^3/h or l/s) of selected diagnostic function.
A specific function is selected using the function selection knob (3), and values for specific functions are selected using the value selection knob (2).
If no function is selected, the display will show three horizontal dashes (- - -).
After setting a desired value, its saving is confirmed with double blink of the displayed symbols.

Function selection:
1.FLOW function
Current flow in m^3/h or l/s is displayed. The displayed value is consistent with the value of measurement signal U (2-10 VDC or 0-10 VDC). By turning the value selection knob, it is possible to choose between flow units (m^3/h or l/s).

2.Vmin function
It enables to set the required minimum flow for the external lead signal Y=0 V or Y=2 V. By turning the value selection knob, it is possible to set the required V_{min}.

3.Vmax function
It enables to set the required maximum flow for the external lead signal Y=10 V. By turning the value selection knob, it is possible to set the required V_{max}.

4.MODE function
It enables to set the rotation direction (clockwise or counterclockwise) and the input range (0-10 V or 2-10 VDC) for lead signal Y. The range of measurement signal U corresponds to lead signal Y.
- 0 - n - 0-10 V, clockwise (CW)
- 0 - i - 0-10 V, counterclockwise (CCW)
- 2 - n - 2-10 V, clockwise (CW)
- 2 - i - 2-10 V, counterclockwise (CCW)

5.DIAG function
It activates the diagnostic menu. The external lead signal Y is omitted, actions are performed in accordance with the function chosen using the value selection knob. Diagnostic functions are automatically deactivated after 10 hours. In the Diag mode, the display blinks, showing the current flow for 8 seconds and the selected function for 2 seconds.
- **oP** **full opening of damper**
- **cL** **full closing of damper**
- **Hi** forcing of Vmax
- **Lo** forcing of Vmin
- **on** test mode ON – servomotor remains in current position
- **oFF** test mode OFF – servomotor operates in line with the external lead signal Y (the signal is presented as 0 – 100 x 10-1 V)

6.Vnom function
It enables to set the V_{nom} value (nominal flow) which corresponds to the differential pressure of 86 Pa measured at the metering system (or another value depending on the maximum speed of air flow through the regulator). The value is factory-set and adjusted by the regulator manufacturer during calibration.

ALNOR® ventilation systems
is a legally protected trademark and technical patent. All rights reserved.

Rectangular VAV flow regulator

RAVAV-Q

Simens servomotor specification

Symbol	GDB181.1E/3
Nominal voltage	24 V AC
Operating range	AC 24 V ±20 % / 50/60 Hz
Power consumption	2,5W (operation), 1,0 (standby)
Resistance class	III (safe voltage - low)
Casing insulation class	IP54
Electromagnetic compatibility	CE (2004/108/EG)
Ambient temperature	0 ... +50˚C
Ambient humidity	5 ... 95% % relative humidity, no condensation (as per EN 60730-1)
Maintenance	maintenance-free

It is also possible to provide regulators with actuators integrated for KNX, BACnet, MODBUS, RTU communication protocol.

Connection diagram

VAV

Supply / extract air control in operating mode “con”

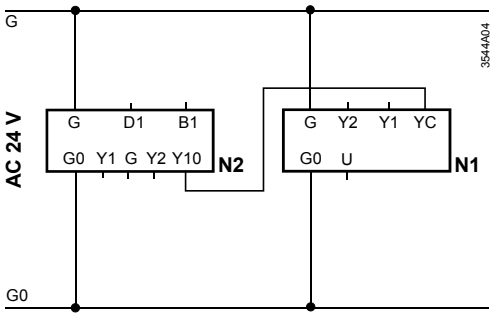

N1 GDB181.1E/3 or GLB181.1E/3
N2 Supervisory controller, e.g. RCU5.. or RCU6..

CAV

Supply / extract air control in operating mode “con”

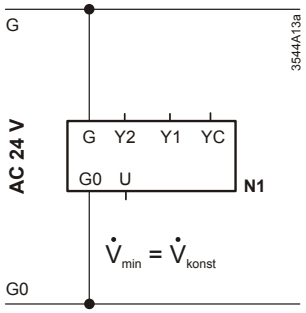

Complete shutoff in operating mode “con”

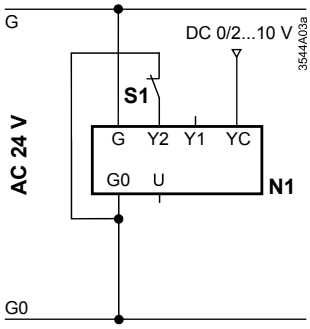

N1 GDB181.1E/3 or GLB181.1E/3
S1 Window switch (Window closed – switch open)

ALNOR® ventilation systems
is a legally protected trademark and technical patent. All rights reserved.

RAPAV



Description

The RAPAV regulator is designed for use in mechanical ventilation systems, in which the volumetric flow depends on the difference in temperatures between two separated zones.
The regulator casing is made of Z 275 galvanized sheet. Optionally, it is possible to use the 1.4301 stainless steel to build the casing. Casing sides with factory-installed EPDM rubber gaskets ensure tight connection to ventilation ducts. Inside the casing, the adjusting damper is also insulated. The automatic control system is installed on the regulator casing so as to allow for the thermal insulation of the system. The regulator is also available in the version with pre-installed 50 mm insulation and a steel sheet shield.

Version 003/08/17/PG

Dimensions

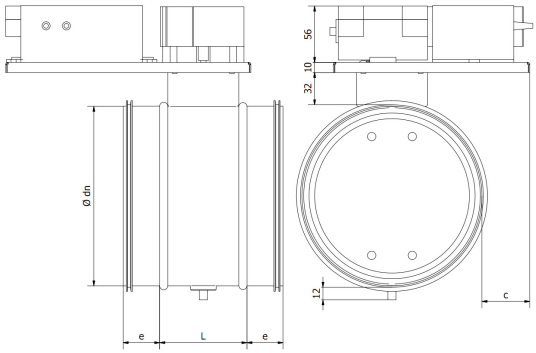

The RAPAV regulator dimensions (recommended method of installation, a mount with automation in the vertical position)..

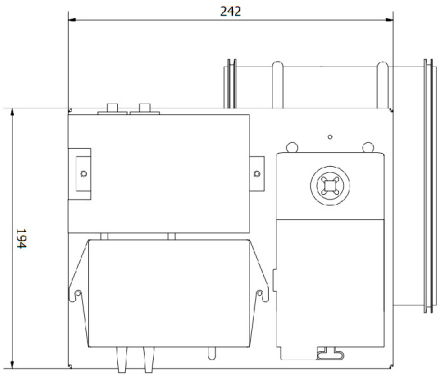

DN	L [mm]	e [mm]	c [mm]
100	86	36	87
125	86	36	75
160	86	36	47
200	86	36	37
250	86	36	12
315	86	36	-
400	141	55	-
500	141	75	-
630	141	75	-

ALNOR® ventilation systems
is a legally protected trademark and technical patent. All rights reserved.

Pressure regulator in RAPAV ventilation systems

RAPAV

How to order

Marking example

Product code: **RAPAV - aaa - bbb - ccc - ddd**

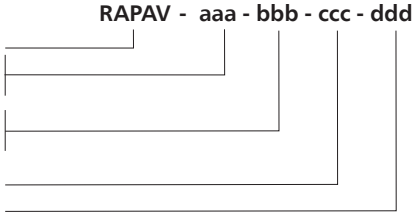

type
- default: galvanised steel

K - 1.4301/304 steel
- default: not insulated

I - insulation with external shield, thickness: 50 mm

Automatic control version (according to the table)

DN – nominal diameter,

*additional options:

Δp_{nom} - nominal differential pressure VRP-STP [Pa]

p_{nom} 30 - 100 Pa	p_{max} 8 - 100 Pa	p_{min} 1 - 100 Pa
p_{nom} 90 - 300 Pa	p_{max} 23 - 300 Pa	p_{min} 3 - 300 Pa
p_{nom} 180 - 600 Pa	p_{max} 45 - 600 Pa	p_{min} 6 - 100 Pa

Δp_{nom} - nominal differential pressure VRP-M [Pa]

p_{nom} 0 - 100 Pa	p_{max} 30 - 100 Pa	p_{min} 2 - 100 Pa
p_{nom} 0 - 300 Pa	p_{max} 90 - 300 Pa	p_{min} 6 - 300 Pa
p_{nom} 0 - 600 Pa	p_{max} 180 - 600 Pa	p_{min} 12 - 600 Paa

Δp_{min} - minimum differential pressure [Pa]*

Δp_{max} - maximum differential pressure [Pa]*

0-10 - setting/measuring signal (by default: 2-10 V)*

MP-BUS - communication protocol*

*to be specified only for RAPAV-FAST

The manufacturer reserves the right to make changes.

Automatic control system of regulators

Combinations of complete automatic control system of regulators:

1-	Belimo actuator, Universal series, standard times	VRP-STP + VFP-100 + LM24A-V
2-	Belimo actuator, Universal series, standard times	VRP-STP + VFP-100 + NM24A-V
3-	Belimo actuator, Universal series, standard times	VRP-STP + VFP-300 + LM24A-V
4-	Belimo actuator, Universal series, standard times	VRP-STP + VFP-300 + NM24A-V
5-	Belimo actuator, Universal series, standard times	VRP-STP + VFP-600 + LM24A-V
6-	Belimo actuator, Universal series, standard times	VRP-STP + VFP-600 + NM24A-V
FAST-1-	Belimo actuator, Universal series, short times	VRP-M + VFP-100 + LMQ24A-SRV-ST
FAST-2-	Belimo actuator, Universal series, short times	VRP-M + VFP-100 + NMQ24A-SRV-ST
FAST-3-	Belimo actuator, Universal series, short times	VRP-M + VFP-300 + LMQ24A-SRV-ST
FAST-4-	Belimo actuator, Universal series, short times	VRP-M + VFP-300 + NMQ24A-SRV-ST
FAST-5-	Belimo actuator, Universal series, short times	VRP-M + VFP-600 + LMQ24A-SRV-ST
FAST-6-	Belimo actuator, Universal series, short times	VRP-M + VFP-600 + NMQ24A-SRV-ST

ALNOR® ventilation systems
is a legally protected trademark and technical patent. All rights reserved.

Operating diagram

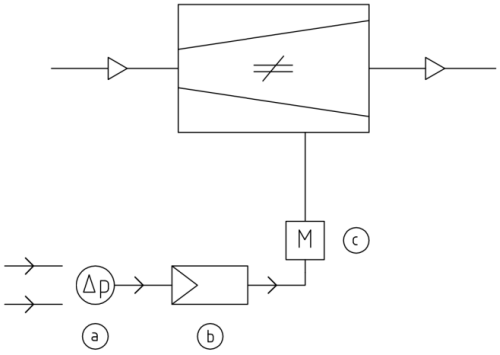

Sensor (a), digital regulator (b) and actuator (c) constitute separate devices. The servomotor adjusts the damper position, the control unit compares the current pressure difference values with the set value [setpoint] and the sensor turns the differential pressure value into electric signal.

Exemplary operating schemes

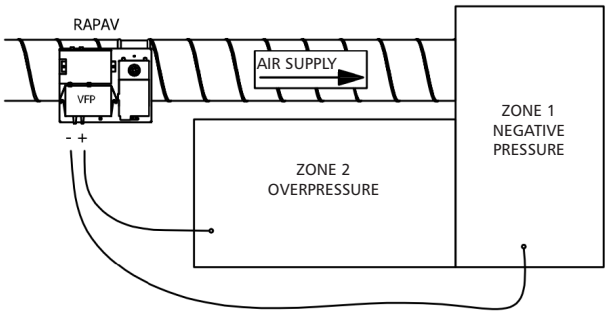

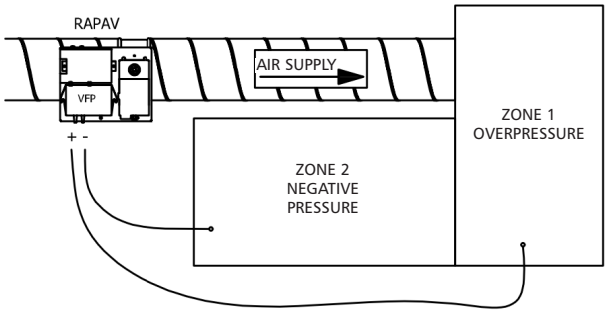

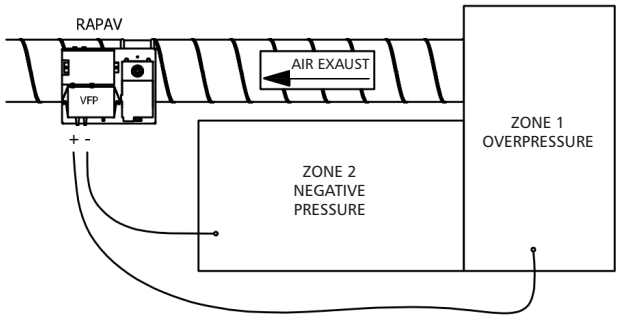

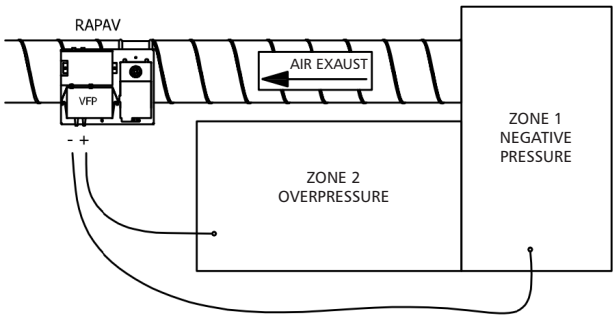

Characteristics

- The insulation rating of the adjusting damper is class 4 as per EN-1751:1998 (option),
- Casing tightness is class C as per EN-1751:1998,
- Operating temperature range from 0 to 50 [°C],
- Differential pressure range from 8 to 600 [Pa], volumetric flow with the speed from 0 to 12 [m/s]

Assembly instructions

1. The automatic control system of the regulator, especially the pressure sensor, must be set in the vertical position,
2. Pulse lines to the pressure sensor must be placed in the given zone at the place which is representative in terms of the pressure measurement,
3. Recommended pulse line length should not exceed 5 [running metres],
4. The pulse lines with the stub pipes are not part of the regulator.

ALNOR® ventilation systems
is a legally protected trademark and technical patent. All rights reserved.

Pressure regulator in RAPAV ventilation systems

RAPAV

Pressure drops

Pressure drop in RAPAV regulator with the fully opened damper.

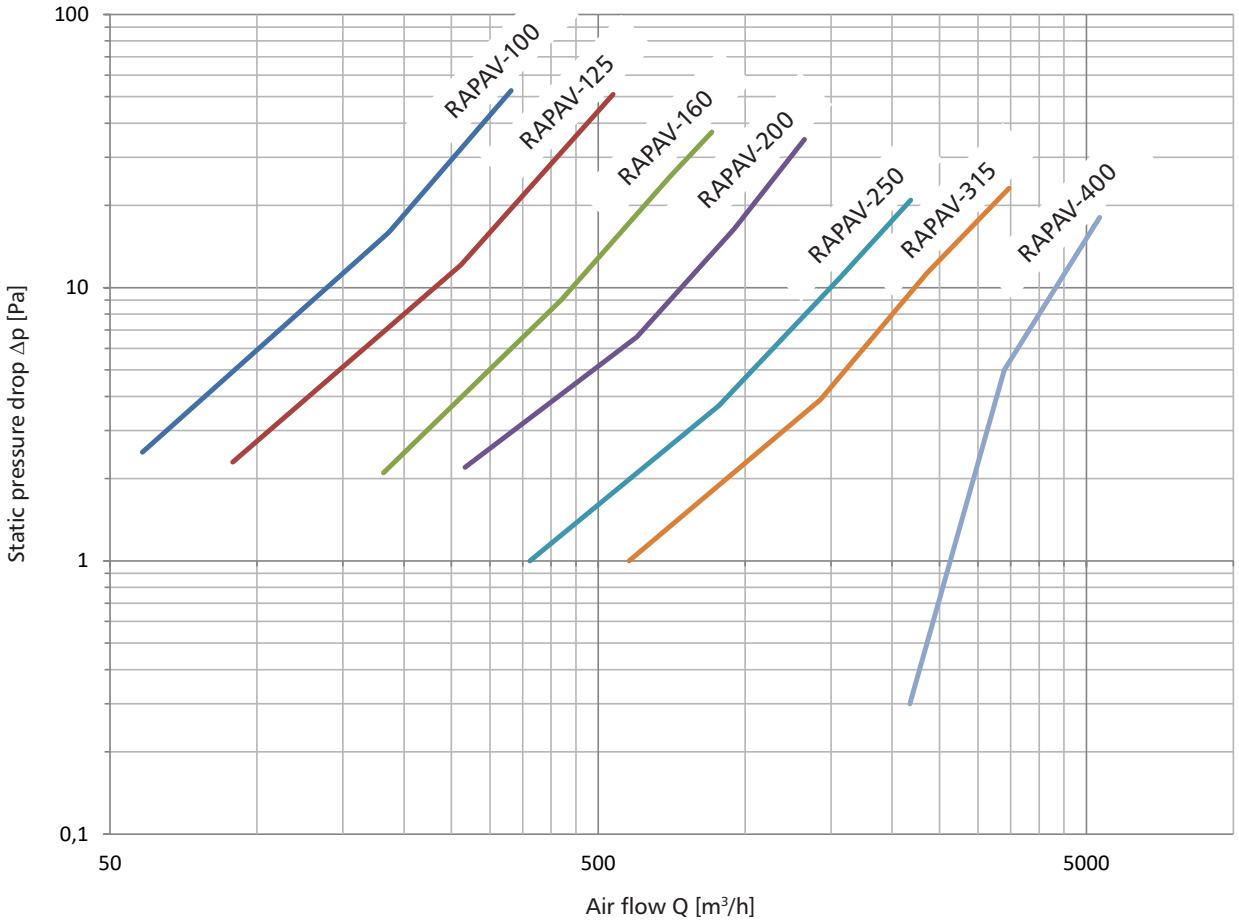

ALNOR® ventilation systems
is a legally protected trademark and technical patent. All rights reserved.

Pressure drops

Pressure drop and level of sound power emitted to the system for different damper settings.

DN	v	q		α = 15°											α = 30°										
				Δp	L_W [dB/Okt]								L_W [dB]	L_{WA} [dB(A)]	Δp	L_W [dB/Okt]								L_W [dB]	L_{WA} [dB(A)]
					f_m [Hz]											f_m [Hz]									
	[m/s]	[m³/h]	[l/s]	[Pa]	63	125	250	500	1000	2000	4000	8000			[Pa]	63	125	250	500	1000	2000	4000	8000		
100	2	53	15	3	0	0	0	-1	-1	-8	-15	-23	7	2	10	8	8	8	8	8	4	-4	-11	15	11
	4	105	29	14	18	18	18	18	17	17	10	3	26	23	39	27	27	26	26	26	26	22	15	34	31
	6	158	44	30	29	29	29	28	28	28	26	18	37	34	87	37	29	29	28	28	28	26	18	40	34
	8	211	59	54	37	36	36	36	36	36	35	28	45	42	155	45	45	45	44	44	44	44	40	53	51
	10	263	73	85	42	42	42	42	42	41	41	37	50	48	242	51	51	50	50	50	50	50	49	59	57
	12	316	88	122	47	47	47	47	46	46	46	44	55	53	348	56	55	55	55	55	55	54	54	64	62
125	2	83	23	3	2	2	2	1	0	-8	-16	-24	8	3	10	10	10	10	10	10	4	-4	-12	17	13
	4	167	46	14	20	20	20	20	19	18	10	2	27	24	39	29	28	28	28	28	28	22	14	36	33
	6	250	70	30	31	31	30	30	30	30	25	17	38	35	87	39	39	39	39	39	38	37	29	47	44
	8	334	93	54	38	38	38	38	38	37	36	28	46	43	155	39	39	39	39	39	38	37	29	47	44
	10	417	116	85	44	44	44	44	44	43	43	36	52	50	242	53	53	52	52	52	52	52	48	61	58
	12	501	139	122	49	49	49	49	48	48	48	43	57	55	348	58	57	57	57	57	57	56	55	66	63
160	2	139	38	3	4	4	4	3	-1	-9	-17	-24	10	4	10	13	12	12	12	11	3	-5	-12	19	14
	4	277	77	14	22	22	22	22	22	17	9	2	29	25	39	31	31	30	30	30	29	21	13	38	35
	6	416	115	30	33	33	33	32	32	32	24	17	40	37	87	41	41	41	41	41	40	36	29	49	46
	8	554	154	54	41	40	40	40	40	40	35	27	48	45	155	49	49	49	48	48	48	47	39	57	54
	10	693	192	85	46	46	46	46	46	45	43	36	54	51	242	55	55	55	54	54	54	54	48	63	60
	12	831	231	122	51	51	51	51	50	50	50	42	59	57	348	60	60	59	59	59	59	58	54	68	65
200	2	218	61	3	6	6	6	5	-1	-9	-17	-25	12	5	10	14	14	14	14	10	3	-5	-13	21	15
	4	436	121	14	24	24	24	24	23	19	11	3	31	27	39	33	32	32	32	32	29	21	13	40	36
	6	654	182	30	35	35	35	34	34	32	24	16	42	38	87	43	43	43	43	43	42	36	28	51	48
	8	872	242	54	43	42	42	42	42	41	35	27	50	47	155	51	51	51	50	50	50	47	39	59	56
	10	1091	303	85	48	48	48	48	48	47	43	35	56	53	242	57	57	56	56	56	56	55	47	65	62
	12	1309	364	122	53	53	53	53	52	52	50	42	61	58	348	62	61	61	61	61	61	60	54	70	67
250	2	342	95	3	8	8	7	6	-2	-10	-18	-25	13	5	10	16	16	16	16	10	2	-6	-13	22	16
	4	684	190	14	26	26	26	26	24	16	8	0	33	27	39	35	34	34	34	34	28	20	12	41	37
	6	1027	285	30	37	37	36	36	36	31	23	16	44	39	87	45	45	45	45	44	43	35	28	52	49
	8	1369	380	54	44	44	44	44	44	42	34	26	52	48	155	53	53	52	52	52	52	46	38	60	57
	10	1711	475	85	50	50	50	50	49	49	42	35	58	55	242	59	59	58	58	58	58	54	47	66	63
	12	2053	570	122	55	55	55	54	54	54	49	41	63	60	348	64	63	63	63	63	62	61	53	71	69
315	2	546	152	3	10	10	9	5	-3	-10	-18	-26	15	6	10	18	18	18	17	9	2	-6	-14	24	17
	4	1092	303	14	28	28	28	27	23	15	8	0	34	28	39	37	36	36	36	35	27	20	12	43	38
	6	1639	455	30	39	39	38	38	38	31	23	15	46	41	87	47	47	47	47	46	43	35	27	54	50
	8	2185	607	54	46	46	46	46	46	41	34	26	53	49	155	55	55	54	54	54	53	45	38	62	59
	10	2731	759	85	52	52	52	52	51	50	42	34	59	56	242	61	60	60	60	60	60	54	46	68	65
	12	3277	910	122	57	57	57	56	56	56	49	41	64	61	348	66	65	65	65	65	64	61	53	73	70
400	2	884	246	3	12	12	11	5	-3	-11	-19	-27	17	6	10	20	20	20	17	9	1	-7	-15	26	17
	4	1768	491	14	30	30	30	29	23	15	7	-1	36	29	39	39	38	38	38	35	27	19	11	45	39
	6	2652	737	30	41	41	40	40	38	30	22	14	47	42	87	49	49	49	49	48	42	34	26	56	51
	8	3536	982	54	48	48	48	48	48	41	33	25	55	51	155	57	57	56	56	56	53	45	37	64	60
	10	4420	1228	85	54	54	54	54	53	49	41	33	61	57	242	63	63	62	62	62	61	53	45	70	67
	12	5305	1473	122	59	59	59	58	58	56	48	40	66	62	348	68	67	67	67	67	66	60	52	75	72

ALNOR® ventilation systems
is a legally protected trademark and technical patent. All rights reserved.

Pressure regulator in RAPAV ventilation systems

RAPAV

Pressure drops

Pressure drop and level of sound power emitted to the system for different damper settings.

DN	v	q		α = 45°											α = 60°										
				Δp	L_W [dB/Okt] f_m [Hz]								L_W [dB]	L_{WA} [dB(A)]	Δp	L_W [dB/Okt] f_m [Hz]								L_W [dB]	L_{WA} [dB(A)]
	[m/s]	[m³/h]	[l/s]	[Pa]	63	125	250	500	1000	2000	4000	8000			[Pa]	63	125	250	500	1000	2000	4000	8000		
100	2	53	15	41	19	19	18	18	18	18	11	3	26	23	206	33	33	33	33	33	32	32	24	41	39
	4	105	29	165	37	37	37	36	36	36	36	29	45	43	823	52	51	51	51	51	51	50	50	60	58
	6	158	44	370	48	48	47	47	47	47	47	44	56	53	1851	62	48	47	47	47	47	47	44	63	54
	8	211	59	658	55	55	55	55	55	54	54	54	64	61	3291	70	70	70	69	69	69	69	68	78	76
	10	263	73	1029	61	61	61	61	60	60	60	60	70	67	5143	76	76	75	75	75	75	75	74	84	82
	12	316	88	1481	66	66	66	65	65	65	65	65	74	72	7405	81	80	80	80	80	80	79	79	89	87
125	2	83	23	41	21	21	20	20	20	18	11	3	28	24	206	35	35	35	35	35	34	31	23	43	40
	4	167	46	165	39	39	39	38	38	38	36	29	47	44	823	54	53	53	53	53	53	52	49	62	59
	6	250	70	370	50	49	49	49	49	49	48	44	58	55	1851	64	64	64	64	63	63	63	63	73	70
	8	334	93	658	57	57	57	57	56	56	56	55	65	63	3291	64	64	64	64	63	63	63	63	73	70
	10	417	116	1029	63	63	63	63	62	62	62	62	71	69	5143	78	78	77	77	77	77	77	76	86	84
	12	501	139	1481	68	68	68	67	67	67	67	67	76	74	7405	83	82	82	82	82	82	81	81	91	89
160	2	139	38	41	23	23	22	22	22	18	10	2	30	26	206	37	37	37	37	37	36	31	23	45	42
	4	277	77	165	41	41	41	41	40	40	36	28	49	46	823	56	56	55	55	55	55	54	49	64	61
	6	416	115	370	52	52	51	51	51	51	51	43	60	57	1851	66	66	66	66	66	65	65	64	75	72
	8	554	154	658	59	59	59	59	59	58	58	54	67	65	3291	74	74	74	73	73	73	73	73	82	80
	10	693	192	1029	65	65	65	65	64	64	64	62	73	71	5143	80	80	79	79	79	79	79	78	88	86
	12	831	231	1481	70	70	70	69	69	69	69	69	78	76	7405	85	84	84	84	84	84	83	83	93	91
200	2	218	61	41	25	25	24	24	24	17	10	2	32	27	206	39	39	39	39	39	38	30	22	47	43
	4	436	121	165	43	43	43	42	42	42	38	30	51	48	823	58	57	57	57	57	57	56	48	66	63
	6	654	182	370	54	54	53	53	53	53	50	43	61	59	1851	68	68	68	68	67	67	67	63	76	74
	8	872	242	658	61	61	61	61	60	60	60	53	69	67	3291	76	76	75	75	75	75	75	74	84	82
	10	1091	303	1029	67	67	67	67	66	66	66	62	75	73	5143	82	82	81	81	81	81	81	80	90	88
	12	1309	364	1481	72	72	72	71	71	71	71	69	80	78	7405	87	86	86	86	86	86	85	85	95	93
250	2	342	95	41	27	26	26	26	25	17	9	1	33	28	206	41	41	41	41	40	37	30	22	48	44
	4	684	190	165	45	45	45	44	44	43	35	27	52	49	823	60	59	59	59	59	58	55	48	67	64
	6	1027	285	370	56	55	55	55	55	55	50	42	63	60	1851	70	70	70	70	69	69	69	63	78	76
	8	1369	380	658	63	63	63	63	62	62	61	53	71	68	3291	78	78	77	77	77	77	77	74	86	83
	10	1711	475	1029	69	69	69	68	68	68	68	61	77	75	5143	84	83	83	83	83	83	82	82	92	90
	12	2053	570	1481	74	74	73	73	73	73	73	68	82	79	7405	88	88	88	88	88	87	87	87	97	94
315	2	546	152	41	29	28	28	28	24	16	8	1	35	29	206	43	43	43	43	42	37	29	21	50	46
	4	1092	303	165	47	47	46	46	46	42	34	26	54	50	823	61	61	61	61	61	60	55	47	69	66
	6	1639	455	370	58	57	57	57	57	57	49	42	65	62	1851	72	72	72	72	71	71	70	62	80	77
	8	2185	607	658	65	65	65	65	64	64	60	52	73	70	3291	80	80	79	79	79	79	79	73	88	85
	10	2731	759	1029	71	71	71	70	70	70	68	61	79	76	5143	86	85	85	85	85	85	84	81	94	91
	12	3277	910	1481	76	76	75	75	75	75	75	67	84	81	7405	90	90	90	90	90	89	89	88	99	96
400	2	884	246	41	31	30	30	30	23	16	8	0	37	30	206	45	45	45	45	44	36	28	21	52	47
	4	1768	491	165	49	49	48	48	48	41	34	26	56	51	823	64	63	63	63	63	62	54	47	71	68
	6	2652	737	370	60	59	59	59	59	57	49	41	67	63	1851	74	74	74	74	73	73	69	62	82	79
	8	3536	982	658	67	67	67	67	66	66	60	52	75	71	3291	82	82	81	81	81	81	80	72	90	87
	10	4420	1228	1029	73	73	73	72	72	72	68	60	81	78	5143	88	87	87	87	87	87	86	81	96	93
	12	5305	1473	1481	78	78	77	77	77	77	75	67	86	83	7405	92	92	92	92	92	91	91	88	101	98

ALNOR® ventilation systems
is a legally protected trademark and technical patent. All rights reserved.

Servomotor specification

RAPAV can be delivered with actuators with the standard movement time or with fast actuators.

Symbol	LM24A-V	NM24A-V	LMQ24A-SRV-ST*	NMQ24A-SRV-ST*
Rated voltage (from the VR... regulator)	24 V AC, 50/60 Hz 24 V DC			
Power consumption	2 W	3,5 W	12 W	12 W
Insulation class	III (safe voltage - low)			
Torque	5 Nm	10 Nm	4 Nm	8 Nm
Movement time	150 s	150 s	2,5 s / 90˚	4 s / 90˚
Casing insulation class	IP54			
Electromagnetic compatibility	CE as per 89/336/EEC			
Ambient temperature	-30...+50˚C			
Ambient humidity	5... 95% relative humidity, no condensation (as per EN 60730-1)			
Maintenance	maintenance-free			

*only for the VRP-M regulator

Depending on the expected reaction time of the regulator (selected actuator), the following regulators are installed:

Symbol	VRP-STP	VRP-M
Rated voltage (from the VR... regulator)	24 V AC, 50/60 Hz	24 V AC, 50/60 Hz 24 V DC
Power consumption	1.3 W (with the VFP-.. sensor, without the..-24-V damper actuator	1.1 W (with the VFP-.. sensor, without the actuator)
Power consumption - rated power	2,6 VA ((with the VFP-.. sensor, without the..-24-V damper actuator	2,6 VA (with the VFP-.. sensor, without the actuator)
Transmission signal	2...10 V DC, input resistance - 100 kΩ	Input impedance >200 kΩ 0... 10 / 2... 10 V DC or 0...20 / 4... 20 mA (with resistance of 500 Ω)
Measuring signal	2...10 V DC / max. 0.5 mA (linear signal = 0...100% Δp	0... 10 / 2... 10 V DC, max 5 mA
Casing insulation class	IP42	
Electromagnetic compatibility	CE as per 2004/108/EC	
Ambient temperature	0...+50˚C	
Ambient humidity	5...95% relative humidity, no condensation (as per EN 60730-1)	

ALNOR® ventilation systems
is a legally protected trademark and technical patent. All rights reserved.

Connections diagram

Diagram of connections for the RAPAV regulator:

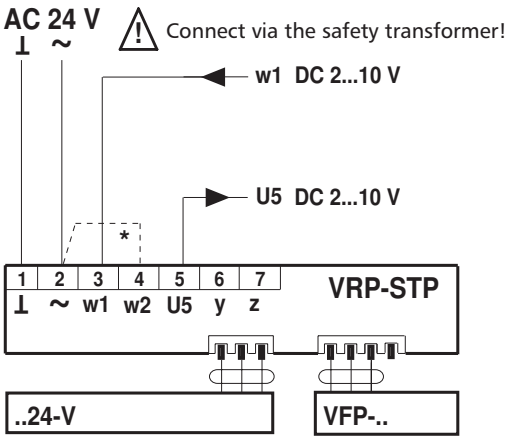

Functions	Connections
damper CLOSED	1 — 7
damper OPEN	2 — 6

*Pre-installed jumpers 2–4.
Delete during remote specification of the set-point.

Warning! The user must not replace or repair any elements of the device!

Diagram of connections for the RAPAV-Q regulator:
Diagram of STP connections – analog operation

Example 1:
With the analog transmission signal

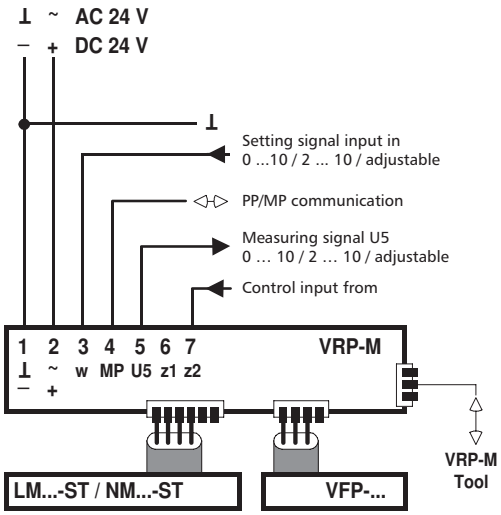

Example 2:
0 … 10 V DC with a cut-off (CLOSED)

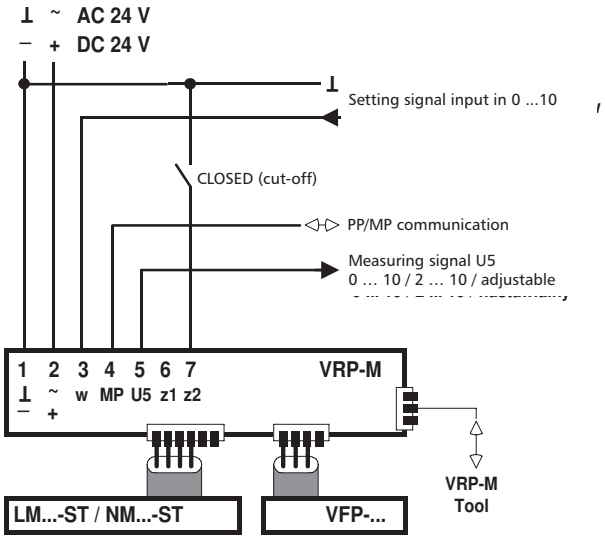

ALNOR® ventilation systems
is a legally protected trademark and technical patent. All rights reserved.

Connections diagram

Diagram of STP connections - operation under constant pressure

Example 1:

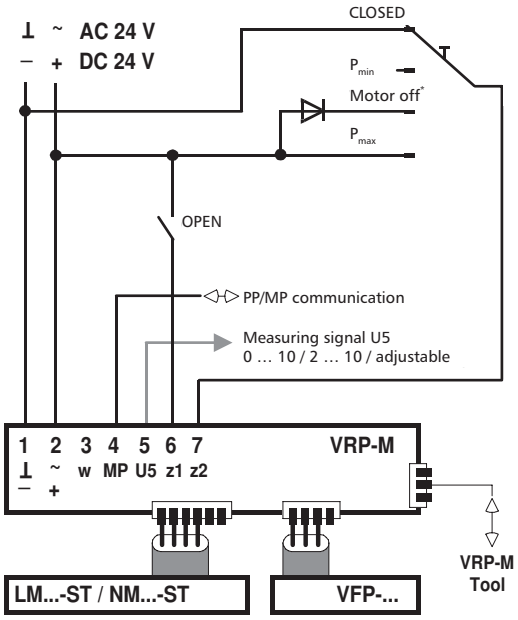

Example 2:

P_{min} - P_{max} - OPEN

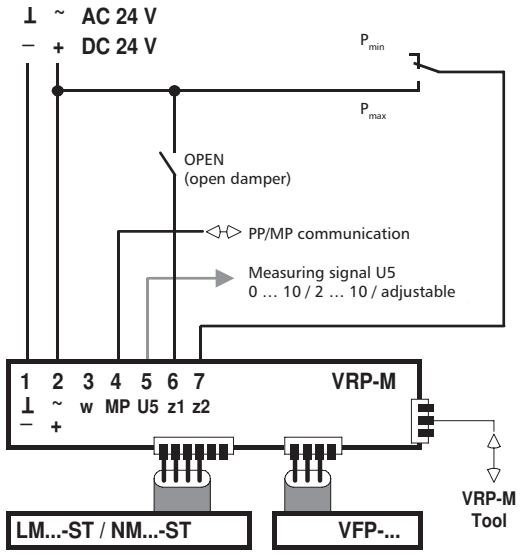

*The function is not available at 24 V DC.

Warning!
Connect power supply via the safety transformer! In order to allow for the easy performance of diagnostic and service work using the VRP-M-Tool software, lines 1, 2 (24 V AC/DC) and 4 (MP busbar signal) must run to easily accessible terminals (of the switchgear, control cabinet, etc.)

Maximum value of the differential pressure

At the stage of selection of a suitable regulator, the maximum differential pressure value must be defined to select the suitable sensor:

Symbol	VFP-100	VFP-300	VFP-600
Nominal voltage	15 V DC (from the VRP… regulator)		
Measuring range	0...100 Pa	0...300 Pa	0...600 Pa
Output signal	0…10 V DC (proportionate to the pressure for VRP...regulators)		
Pressure connection	Stub pipes for the hose with the inner diameter of Ø 4…6 mm		
Insulation class	III (safe voltage - low)		
Casing insulation class	IP42		
Ambient temperature	0...+50˚C		
Electromagnetic compatibility	CE as per 2004/108/EC		

ALNOR® ventilation systems
is a legally protected trademark and technical patent. All rights reserved.

Water heater

HDW

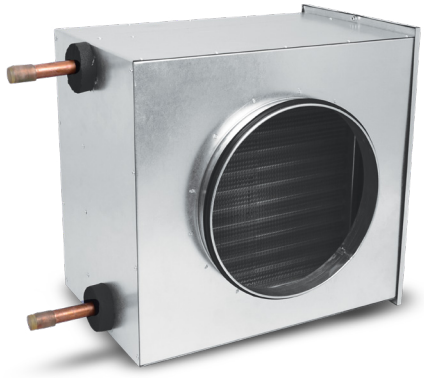

Description

HDW water heaters provide warm air in ventilation ductwork systems. The heating medium is water.
All HDW water heaters have an enclosure provided with an access cover to facilitate inspection and cleaning of the heat exchanger.
The HDW water heater features two round stub pipes with EPDM gaskets.
The housing is made from galvanized steel sheet. The water coil and stub pipes are made from copper; the heat exchanger fins are made from aluminium.

Maximum operating temperature: +100˚C
Maximum operating pressure: 1.0 MPa (10 bar)

Product code example
Product code: **HDW - 160**

type
Ød

Dimensions

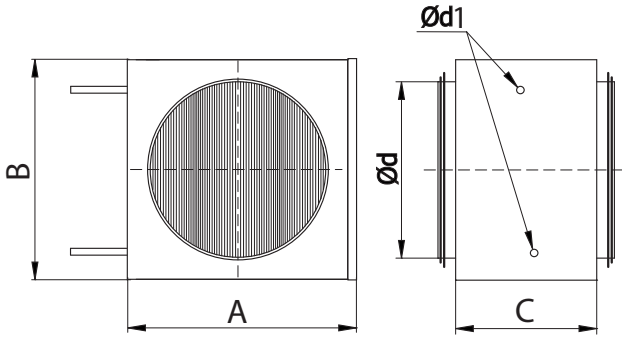

Type	Ød [mm]	A [mm]	B [mm]	C [mm]	$Ød_1$ [mm]
HDW-100	100	215	190	220	9,52
HDW-125	125	215	190	220	9,52
HDW-150	150	290	265	220	12,0
HDW-160	160	290	265	220	12,0
HDW-200	200	290	265	220	12,0
HDW-250	250	395	365	260	18,0
HDW-315	315	460	440	260	18,0
HDW-400	400	560	525	270	18,0
HDW-500	500	740	650	270	22,0

ALNOR® ventilation systems
is a legally protected trademark and technical patent. All rights reserved.

Water heater
HDW

Available combinations

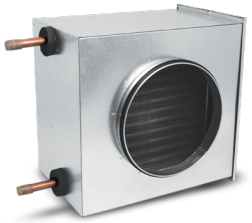

HDW water heater

+



C215Q-J 2-way valve

+



CQ230A actuator

+



LCT indoor thermostat

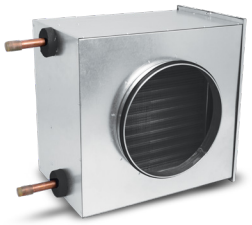

HDW water heater

+



R3..xx-B.. 3-way valve

+



TRY230 actuator

+



LCT indoor thermostat

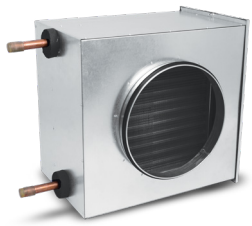

HDW water heater

+

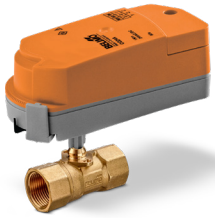

Valve w/actuator

+



LTC room control thermostat

+



AKF10 duct air temperature sensor

Selection of valves for heaters

2-way control valves with adjustable kvs, DN15-20									
Heater type	*Max. power (kW)*	*Max air output (l/s)*	*Press. loss (kPa)*	*Max. temp. (˚C)*	*Max. press. loss over valve (kPa)*	*DN (mm)*	*Valve type*	*kvs m³/h / actuator setting*	*On/Off 230V AC actuator*
HDW-100	3.46	0.04	6.23	90	13	15	C215Q-J	0.4 / 1	CQ230A
HDW-125	4.67	0.05	10.99	90	9	15	C215Q-J	0.6 / 2	CQ230A
HDW-150	7.67	0.09	7.23	90	10	15	C215Q-J	1.0 / 3	CQ230A
HDW-160	8.33	0.10	8.43	90	13	15	C215Q-J	1.0 / 3	CQ230A
HDW-200	11.11	0.14	14.54	90	25	15	C215Q-J	1.0 / 3	CQ230A
HDW-250	18.26	0.22	15.66	90	16	15	C215Q-J	2.0 / 5	CQ230A
HDW-315	29.03	0.36	26.79	90	20	15	C215Q-J	2.9 / 6	CQ230A
HDW-400	45.26	0.55	31.86	90	25	15	C215Q-J	4.0 / N	CQ230A
HDW-500	66.68	0.82	40.13	90	27	20	C220Q-K	5.7 / N	CQ230A

ALNOR® ventilation systems
is a legally protected trademark and technical patent. All rights reserved.

Water heater

HDW

Selection of valves for heaters

3-way control valves, DN15-20									
Heater type	*Max. power (kW)*	*Max air output (l/s)*	*Press. loss (kPa)*	*Max. temp. (˚C)*	*Max. press. loss over valve (kPa)*	*DN (mm)*	*Valve type*	*kvs m³/h / actuator setting*	*On/Off 230V AC actuator*
HDW-100	3.46	0.04	6.23	90	5	15	R3015-P63-B1	0.63	TRY230
HDW-125	4.67	0.05	10.99	90	8	15	R3015-P63-B1	0.63	TRY230
HDW-150	7.67	0.09	7.23	90	10	15	R3015-1-B1	1.0	TRY230
HDW-160	8.33	0.10	8.43	90	13	15	R3015-1-B1	1.0	TRY230
HDW-200	11.11	0.14	14.54	90	10	15	R3015-1P6-B1	1.6	TRY230
HDW-250	18.26	0.22	15.66	90	10	15	R3015-2P5-B1	2.5	TRY230
HDW-315	29.03	0.36	26.79	90	10	15	R3015-4-B1	4.0	TRY230
HDW-400	45.26	0.55	31.86	90	10	20	R3020-6P3-B1	6.3	TRY230
HDW-500	66.68	0.82	40.13	90	22	20	R3020-6P3-B1	6.3	TRY230

Technical specifications

HDW-100			Water temperature on inlet / outlet: 90˚C/70˚C				Water temperature on inlet / outlet: 80˚C/60˚C				Water temperature on inlet / outlet: 60˚C/40˚C			
Air output	Pressure loss	Inlet temperature	Outlet temperature	Heating power	Heating water output	Pressure loss across heater	Outlet temperature	Heating power	Heating water output	Pressure loss across heater	Outlet temperature	Heating power	Heating water output	Pressure loss across heater
m³/h	Pa	˚C	˚C	kW	l/s	kPa	˚C	kW	l/s	kPa	˚C	kW	l/s	kPa
60	3.22	-25	56.20	1.63	0.02	1.53	47.50	1.45	0.02	1.26	28.85	1.08	0.01	0.76
60	3.30	-15	58.25	1.47	0.02	1.27	49.49	1.29	0.02	1.01	31.04	0.92	0.01	0.57
60	3.35	-10	59.25	1.39	0.02	1.14	50.43	1.21	0.02	0.90	32.37	0.85	0.01	0.49
60	3.45	0	61.15	1.23	0.02	0.90	52.20	1.05	0.01	0.67	34.96	0.70	0.01	0.35
60	3.56	+10	62.93	1.07	0.01	0.69	53.75	0.89	0.01	0.50	37.49	0.56	0.01	0.22
110	7.65	-25	44.83	2.56	0.03	3.53	37.37	2.29	0.03	2.89	21.97	1.72	0.02	1.76
110	7.84	-15	48.03	2.32	0.03	2.92	40.55	2.04	0.03	2.33	24.92	1.47	0.02	1.31
110	7.95	-10	49.60	2.19	0.03	2.63	42.10	1.92	0.02	2.07	26.29	1.34	0.02	1.10
110	8.16	0	52.68	1.94	0.02	2.10	45.13	1.67	0.02	1.59	28.65	1.06	0.01	0.72
110	8.41	+10	55.65	1.70	0.02	1.62	48.03	1.41	0.02	1.17	32.22	0.82	0.01	0.46
170	15.01	-25	36.05	3.46	0.04	6.23	29.55	3.09	0.04	5.09	16.22	2.34	0.03	3.11
170	15.38	-15	40.14	3.13	0.04	5.15	33.60	2.76	0.03	4.11	20.16	2.00	0.02	2.32
170	15.58	-10	42.15	2.97	0.04	4.65	35.60	2.59	0.03	3.65	22.06	1.82	0.02	1.96
170	16.00	0	46.10	2.63	0.03	3.70	39.53	2.25	0.03	2.81	25.72	1.47	0.02	1.31
170	16.45	+10	49.98	2.29	0.03	2.86	43.36	1.91	0.02	2.03	28.83	1.08	0.01	0.75

ALNOR® ventilation systems
is a legally protected trademark and technical patent. All rights reserved.

Technical specifications

HDW-125			Water temperature on inlet / outlet: 90°C/70°C				Water temperature on inlet / outlet: 80°C/60°C				Water temperature on inlet / outlet: 60°C/40°C			
Air output	Pressure loss	Inlet temperature	Outlet temperature	Heating power	Heating water output	Pressure loss across heater	Outlet temperature	Heating power	Heating water output	Pressure loss across heater	Outlet temperature	Heating power	Heating water output	Pressure loss across heater
m³/h	Pa	°C	°C	kW	l/s	kPa	°C	kW	l/s	kPa	°C	kW	l/s	kPa
90	5.76	-25	48.76	2.22	0.03	2.73	40.88	1.98	0.02	2.20	24.49	1.49	0.02	1.34
90	5.95	-15	51.56	2.00	0.02	2.22	43.65	1.76	0.02	1.77	26.92	1.26	0.02	0.99
90	6.05	-10	52.94	1.90	0.02	2.00	44.99	1.66	0.02	1.58	28.00	1.14	0.01	0.83
90	6.25	0	55.62	1.68	0.02	1.60	47.61	1.44	0.01	1.21	30.59	0.92	0.01	0.56
90	6.48	+10	58.19	1.46	0.01	1.23	50.08	1.22	0.01	0.89	33.99	0.73	0.01	0.36
180	16.22	-25	34.90	3.60	0.04	6.70	28.52	3.21	0.03	5.47	15.45	2.43	0.02	3.34
180	16.70	-15	39.10	3.25	0.04	5.54	32.68	2.87	0.03	4.41	19.51	2.08	0.02	2.49
180	16.98	-10	41.16	3.08	0.03	4.99	34.74	2.69	0.03	3.92	21.48	1.90	0.02	2.10
180	17.58	0	45.24	2.73	0.03	3.98	38.79	2.34	0.02	3.02	25.28	1.53	0.01	1.41
180	18.25	+10	49.23	2.38	0.02	3.08	42.74	1.99	0.02	2.22	28.60	1.13	0.01	0.81
270	34.27	-25	26.80	4.67	0.05	10.99	21.29	4.17	0.05	8.96	10.04	3.16	0.03	5.45
270	35.35	-15	31.80	4.22	0.05	9.08	26.26	3.72	0.04	7.22	14.94	2.70	0.03	4.07
270	35.91	-10	34.26	4.00	0.04	8.18	28.71	3.50	0.04	6.41	17.34	2.47	0.03	3.44
270	37.07	0	39.14	3.55	0.04	6.51	33.57	3.04	0.03	4.93	22.06	2.00	0.02	2.32
270	38.38	+10	43.94	3.09	0.03	5.03	38.34	2.58	0.03	3.62	26.54	1.51	0.01	1.37

HDW-150			Water temperature at inlet / outlet: 90°C/70°C				Water temperature at inlet / outlet: 80°C/60°C				Water temperature at inlet / outlet: 60°C/40°C			
Air output	Pressure loss	Inlet temperature	Outlet temperature	Heating power	Heating water output	Pressure loss across heater	Outlet temperature	Heating power	Heating water output	Pressure loss across heater	Outlet temperature	Heating power	Heating water output	Pressure loss across heater
m³/h	Pa	°C	°C	kW	l/s	kPa	°C	kW	l/s	kPa	°C	kW	l/s	kPa
130	3.36	-25	56.40	3.53	0.04	1.70	47.76	3.16	0.03	1.40	29.55	2.37	0.02	0.87
130	3.47	-15	58.45	3.19	0.03	1.41	49.76	2.81	0.03	1.14	30.95	2.00	0.02	0.64
130	3.52	-10	59.44	3.02	0.03	1.27	50.72	2.64	0.03	1.01	31.67	1.81	0.02	0.54
130	3.64	0	61.37	2.68	0.03	1.02	52.55	2.29	0.02	0.78	34.35	1.50	0.01	0.38
130	3.77	+10	63.19	2.33	0.02	0.79	54.20	1.94	0.02	0.58	36.99	1.18	0.01	0.25
260	8.81	-25	43.20	5.92	0.07	4.44	35.98	5.29	0.06	3.65	21.17	4.01	0.04	2.27
260	9.11	-15	46.60	5.35	0.07	3.68	39.34	4.72	0.06	2.95	24.38	3.42	0.04	1.70
260	9.26	-10	48.26	5.07	0.06	3.32	40.99	4.44	0.05	2.63	25.91	3.12	0.03	1.44
260	9.58	0	51.54	4.50	0.06	2.66	44.23	3.86	0.04	2.03	28.75	2.51	0.03	0.96
260	9.93	+10	54.71	3.92	0.04	2.06	47.35	3.28	0.04	1.50	30.87	1.83	0.02	0.55
380	15.65	-25	35.52	7.67	0.09	7.23	29.10	6.86	0.08	5.93	16.05	5.20	0.06	3.68
380	16.20	-15	39.68	6.94	0.09	5.99	33.24	6.12	0.07	4.80	20.08	4.45	0.05	2.76
380	16.48	-10	41.72	6.58	0.08	5.41	35.28	5.76	0.07	4.27	22.05	4.07	0.04	2.34
380	17.06	0	45.76	5.83	0.07	4.32	39.29	5.01	0.06	3.30	25.85	3.29	0.04	1.59
380	17.71	+10	49.71	5.09	0.06	3.35	43.21	4.26	0.05	2.44	29.30	2.47	0.03	0.94

ALNOR® ventilation systems
is a legally protected trademark and technical patent. All rights reserved.

Water heater

HDW

Technical specifications

HDW-160			Water temperature at inlet / outlet: 90˚C/70˚C				Water temperature at inlet / outlet: 80˚C/60˚C				Water temperature at inlet / outlet: 60˚C/40˚C			
Air output	Pressure loss	Inlet temperature	Outlet temperature	Heating power	Heating water output	Pressure loss across heater	Outlet temperature	Heating power	Heating water output	Pressure loss across heater	Outlet temperature	Heating power	Heating water output	Pressure loss across heater
m³/h	Pa	˚C	˚C	kW	l/s	kPa	˚C	kW	l/s	kPa	˚C	kW	l/s	kPa
140	3.70	-25	55.09	3.74	0.04	1.89	46.59	3.35	0.04	1.56	28.78	2.51	0.03	0.97
140	3.82	-15	57.27	3.38	0.04	1.57	48.73	2.98	0.03	1.26	30.43	2.13	0.02	0.71
140	3.88	-10	58.34	3.20	0.03	1.42	49.76	2.80	0.03	1.12	31.01	1.92	0.02	0.59
140	4.01	0	60.40	2.83	0.03	1.13	51.74	2.43	0.02	0.87	33.55	1.58	0.01	0.42
140	4.16	+10	62.36	2.48	0.03	0.88	53.55	2.06	0.02	0.64	36.35	1.24	0.01	0.27
290	10.36	-25	41.00	6.39	0.08	5.12	34.01	5.71	0.07	4.21	19.71	4.33	0.05	2.61
290	10.72	-15	44.62	5.78	0.07	4.24	37.60	5.10	0.06	3.41	23.16	3.70	0.04	1.96
290	10.90	-10	46.39	5.47	0.07	3.83	39.36	4.79	0.06	3.03	24.82	3.38	0.04	1.66
290	11.28	0	49.88	4.85	0.06	3.06	42.82	4.17	0.05	2.34	27.96	2.72	0.03	1.12
290	11.70	+10	53.28	4.24	0.05	2.38	46.17	3.54	0.04	1.73	30.45	2.00	0.02	0.64
430	19.68	-25	33.02	8.33	0.10	8.43	26.87	7.44	0.09	6.91	14.37	5.65	0.07	4.28
430	20.26	-15	37.42	7.53	0.09	6.98	31.25	6.64	0.08	5.59	18.66	4.83	0.06	3.21
430	20.57	-10	39.59	7.13	0.09	6.30	33.41	6.24	0.08	4.98	20.76	4.42	0.05	2.72
430	21.20	0	43.88	6.33	0.08	5.04	37.68	5.44	0.07	3.84	24.85	3.58	0.04	1.85
430	21.92	+10	48.07	5.52	0.07	3.90	41.85	4.62	0.06	2.84	28.65	2.71	0.03	1.11

HDW-200			Water temperature at inlet / outlet: 90˚C/70˚C				Water temperature at inlet / outlet: 80˚C/60˚C				Water temperature at inlet / outlet: 60˚C/40˚C			
Air output	Pressure loss	Inlet temperature	Outlet temperature	Heating power	Heating water output	Pressure loss across heater	Outlet temperature	Heating power	Heating water output	Pressure loss across heater	Outlet temperature	Heating power	Heating water output	Pressure loss across heater
m³/h	Pa	˚C	˚C	kW	l/s	kPa	˚C	kW	l/s	kPa	˚C	kW	l/s	kPa
225	7.13	-25	46.09	5.34	0.07	3.66	38.55	4.77	0.06	3.01	23.07	3.61	0.04	1.87
225	7.37	-15	49.19	4.83	0.06	3.03	41.63	4.26	0.05	2.44	25.95	3.08	0.04	1.40
225	7.49	-10	50.71	4.57	0.06	2.74	43.13	4.00	0.05	2.17	27.30	2.81	0.03	1.18
225	7.75	0	53.70	4.05	0.05	2.19	46.07	3.48	0.04	1.68	29.71	2.24	0.03	0.79
225	8.03	+10	56.58	3.54	0.04	1.70	48.89	2.95	0.04	1.24	32.15	1.68	0.02	0.47
455	21.84	-25	31.88	8.64	0.11	9.03	25.85	7.72	0.09	7.41	13.60	5.86	0.07	4.58
455	22.50	-15	36.39	7.81	0.10	7.48	30.35	6.89	0.08	5.99	18.01	5.02	0.06	3.44
455	22.84	-10	38.62	7.40	0.09	6.75	32.56	6.48	0.08	5.33	20.17	4.59	0.06	2.92
455	23.55	0	43.02	6.57	0.08	5.39	36.94	5.64	0.07	4.11	24.39	3.72	0.05	1.98
455	24.35	+10	47.33	5.73	0.07	4.18	41.22	4.79	0.06	3.04	28.34	2.82	0.03	1.19
680	45.74	-25	23.95	11.11	0.14	14.54	18.77	9.93	0.12	11.90	8.25	7.54	0.09	7.33
680	47.22	-15	29.24	10.05	0.12	12.03	24.04	8.87	0.11	9.61	13.46	6.46	0.08	5.50
680	47.99	-10	31.85	9.52	0.12	10.86	26.64	8.33	0.10	8.55	16.03	5.92	0.07	4.67
680	49.57	0	37.03	8.45	0.10	8.66	31.80	7.25	0.09	6.59	21.09	4.81	0.06	3.18
680	51.37	+10	42.13	7.37	0.09	6.70	36.88	6.17	0.08	4.86	25.99	3.67	0.04	1.93

ALNOR® ventilation systems
is a legally protected trademark and technical patent. All rights reserved.

Technical specifications

HDW-250			Water temperature at inlet / outlet: 90°C/70°C				Water temperature at inlet / outlet: 80°C/60°C				Water temperature at inlet / outlet: 60°C/40°C			
Air output	Pressure loss	Inlet temperature	Output temperature	Heating power	Heating water output	Pressure loss across heater	Outlet temperature	Heating power	Heating water output	Pressure loss across heater	Outlet temperature	Heating power	Heating water output	Pressure loss across heater
m³/h	Pa	°C	°C	kW	l/s	kPa	°C	kW	l/s	kPa	°C	kW	l/s	kPa
360	6.26	-25	49.07	8.90	0.11	4.07	41.38	7.98	0.10	3.37	25.68	6.09	0.07	2.14
360	6.47	-15	51.98	8.06	0.10	3.38	44.27	7.13	0.09	2.74	28.42	5.22	0.06	1.62
360	6.57	-10	53.41	7.64	0.09	3.06	45.68	6.71	0.08	2.45	29.73	4.78	0.06	1.38
360	6.80	0	56.20	6.79	0.08	2.46	48.44	5.85	0.07	1.91	32.15	3.88	0.05	0.95
360	7.04	+10	58.90	5.94	0.07	1.93	51.08	4.99	0.06	1.42	33.90	2.90	0.04	0.56
710	17.58	-25	35.08	14.23	0.17	9.80	28.82	12.75	0.16	8.08	16.15	9.75	0.12	5.09
710	18.10	-15	39.35	12.89	0.16	8.14	33.08	11.41	0.14	6.56	20.33	8.38	0.10	3.85
710	18.37	-10	41.46	12.22	0.15	7.36	35.17	10.73	0.13	5.85	22.38	7.69	0.10	3.29
710	18.92	0	45.62	10.87	0.13	5.91	39.31	9.36	0.11	4.54	26.38	6.28	0.08	2.27
710	19.56	+10	49.68	9.51	0.12	4.60	43.35	7.99	0.10	3.39	30.18	4.83	0.06	1.41
1050	36.15	-25	27.11	18.26	0.22	15.66	21.68	16.35	0.20	12.89	10.78	12.50	0.15	8.07
1050	37.29	-15	32.15	16.54	0.20	13.00	26.70	14.63	0.18	10.45	15.66	10.75	0.13	6.10
1050	37.89	-10	34.64	15.68	0.19	11.75	29.18	13.76	0.17	9.32	18.11	9.87	0.12	5.21
1050	39.12	0	39.57	13.94	0.17	9.42	34.09	12.01	0.15	7.22	22.93	8.07	0.10	3.60
1050	40.50	+10	44.41	12.19	0.15	7.33	38.92	10.25	0.13	5.37	27.61	6.24	0.08	2.24

HDW-315			Water temperature at inlet / outlet: 90°C/70°C				Water temperature at inlet / outlet: 80°C/60°C				Water temperature at inlet / outlet: 60°C/40°C			
Air output	Pressure loss	Inlet temperature	Outlet temperature	Heating power	Heating water output	Pressure loss across heater	Outlet temperature	Heating power	Heating water output	Pressure loss across heater	Outlet temperature	Heating power	Heating water output	Pressure loss across heater
m³/h	Pa	°C	°C	kW	l/s	kPa	°C	kW	l/s	kPa	°C	kW	l/s	kPa
560	6.36	-25	49.59	13.94	0.17	6.77	41.94	12.51	0.15	5.62	26.45	9.61	0.12	3.61
560	6.57	-15	52.52	12.64	0.16	5.64	44.86	11.20	0.14	4.58	29.25	8.28	0.10	2.75
560	6.68	-10	53.95	11.98	0.15	5.11	46.28	10.54	0.13	4.10	30.60	7.60	0.09	2.36
560	6.91	0	56.77	10.67	0.13	4.12	49.07	9.22	0.11	3.20	33.17	6.23	0.08	1.64
560	7.16	+10	59.48	9.35	0.11	3.23	51.74	7.89	0.10	2.40	35.39	4.80	0.06	1.03
1120	18.40	-25	35.11	22.47	0.28	16.52	28.93	20.15	0.25	13.66	16.44	15.48	0.18	8.68
1120	18.94	-15	39.43	20.37	0.25	13.74	33.23	18.05	0.22	11.11	20.68	13.35	0.16	6.60
1120	19.23	-10	41.56	19.32	0.24	12.44	35.35	16.99	0.21	9.93	22.76	12.27	0.15	5.65
1120	19.81	0	45.76	17.19	0.21	10.00	39.53	14.85	0.18	7.79	26.84	10.08	0.12	3.94
1120	20.48	+10	49.87	15.07	0.18	7.82	43.62	12.71	0.16	5.79	30.76	7.84	0.10	2.49
1680	38.82	-25	26.79	29.03	0.36	26.79	21.45	26.03	0.32	22.08	10.69	20.00	0.24	13.95
1680	40.06	-15	31.90	26.32	0.32	22.27	26.54	23.31	0.28	17.94	15.73	17.24	0.21	10.59
1680	40.70	-10	34.42	24.96	0.31	20.14	29.06	21.95	0.27	16.02	18.22	15.85	0.19	9.07
1680	42.02	0	39.42	22.21	0.27	16.17	34.04	19.18	0.23	12.45	23.13	13.03	0.16	6.31
1680	43.52	+10	44.33	19.46	0.24	12.61	38.94	16.40	0.20	9.30	27.91	10.15	0.12	3.99

ALNOR® ventilation systems
is a legally protected trademark and technical patent. All rights reserved.

Water heater

HDW

Technical specifications

HDW-400			Water temperature at inlet / outlet: 90˚C/70˚C				Water temperature at inlet / outlet: 80˚C/60˚C				Water temperature at inlet / outlet: 60˚C/40˚C			
Air output	Pressure loss	Inlet temperature	Output temperature	Heating power	Heating water output	Pressure loss across heater	Outlet temperature	Heating power	Heating water output	Pressure loss across heater	Outlet temperature	Heating power	Heating water output	Pressure loss across heater
m³/h	Pa	˚C	˚C	kW	l/s	kPa	˚C	kW	l/s	kPa	˚C	kW	l/s	kPa
900	7,17	-25	48,17	21,98	0,27	8,14	40,69	19,73	0,24	6,75	25,51	15,17	0,18	4,31
900	7,41	-15	51,27	19,93	0,24	6,78	43,76	17,67	0,22	5,50	28,48	13,07	0,16	3,28
900	7,53	-10	52,78	18,91	0,23	6,14	45,27	16,64	0,20	4,92	29,92	12,02	0,15	2,81
900	7,79	0	55,76	16,84	0,21	4,95	48,21	14,56	0,18	3,84	32,66	9,86	0,12	1,96
900	8,07	+10	58,63	14,77	0,18	3,88	51,05	12,47	0,15	2,88	35,07	7,61	0,09	1,22
1800	21,46	-25	33,54	35,16	0,43	19,74	27,52	31,54	0,39	16,27	15,37	24,24	0,29	10,27
1800	22,10	-15	38,02	31,89	0,39	16,41	31,98	28,25	0,34	13,22	19,77	20,91	0,25	7,80
1800	22,44	-10	40,23	30,24	0,37	14,85	34,18	26,60	0,32	11,81	21,94	19,23	0,23	6,68
1800	23,13	0	44,59	26,93	0,33	11,93	38,53	23,26	0,28	9,18	26,18	15,80	0,19	4,65
1800	23,92	+10	48,87	23,61	0,29	9,31	42,78	19,91	0,24	6,87	30,27	12,31	0,15	2,94
2700	45,23	-25	25,24	45,26	0,55	31,86	20,06	40,59	0,50	26,19	9,63	31,19	0,38	16,44
2700	46,68	-15	30,50	41,04	0,50	26,46	25,31	36,36	0,44	21,27	14,82	26,89	0,33	12,46
2700	47,45	-10	33,10	38,92	0,48	23,93	27,90	34,22	0,42	18,97	17,39	24,73	0,30	10,66
2700	49,00	0	38,26	34,65	0,42	19,20	33,04	29,92	0,37	14,73	22,46	20,33	0,25	7,41
2700	50,77	+10	43,32	30,35	0,37	14,95	38,09	25,59	0,31	10,98	27,41	15,85	0,19	4,68

HDW-			Water temperature at inlet / outlet: 90˚C/70˚C				Water temperature at inlet / outlet: 80˚C/60˚C				Water temperature at inlet / outlet: 60˚C/40˚C			
Air output	Pressure loss	Inlet temperature	Outlet temperature	Heating power	Heating water output	Pressure loss across heater	Outlet temperature	Heating power	Heating water output	Pressure loss across heater	Outlet temperature	Heating power	Heating water output	Pressure loss across heater
m³/h	Pa	˚C	˚C	kW	l/s	kPa	˚C	kW	l/s	kPa	˚C	kW	l/s	kPa
1400	6,02	-25	51,55	35,77	0,44	12,54	43,87	37,18	0,38	10,48	28,38	24,94	0,30	6,88
1400	6,22	-15	54,40	32,48	0,40	10,48	46,70	28,87	0,35	8,58	31,14	21,58	0,26	5,29
1400	6,32	-10	55,79	30,82	0,38	9,52	48,09	27,21	0,33	7,70	32,48	19,89	0,24	4,56
1400	6,53	0	58,53	27,50	0,34	7,71	50,79	23,86	0,29	6,05	35,05	16,46	0,20	3,24
1400	6,77	+10	61,16	24,18	0,30	6,08	53,39	20,50	0,25	4,59	37,41	12,95	0,16	2,11
2500	14,16	-25	39,23	53,59	0,66	26,62	32,74	48,17	0,59	22,14	19,70	37,28	0,45	14,35
2500	14,65	-15	43,24	48,65	0,60	22,23	36,73	43,21	0,53	18,09	23,63	32,26	0,39	11,00
2500	14,90	-10	45,20	46,17	0,57	20,15	38,69	40,72	0,50	16,20	25,56	29,73	0,36	9,48
2500	15,42	0	49,09	41,18	0,50	16,28	42,56	35,69	0,44	12,69	29,34	24,60	0,30	6,71
2500	16,00	+10	52,88	36,18	0,44	12,80	46,33	30,65	0,37	9,58	32,98	19,38	0,23	4,35
3500	25,78	-25	32,10	66,68	0,82	40,13	26,31	59,92	0,73	33,28	14,70	46,35	0,56	21,43
3500	26,57	-15	36,77	60,54	0,74	33,46	30,97	53,75	0,66	27,16	19,30	40,10	0,49	16,40
3500	26,98	-10	39,07	57,45	0,70	30,33	33,27	50,65	0,62	24,32	21,57	36,95	0,45	14,11
3500	27,82	0	43,63	51,23	0,63	24,47	37,80	44,38	0,54	19,01	26,04	30,56	0,31	9,97
3500	28,78	+10	48,09	44,99	0,55	19,20	42,25	38,08	0,46	14,31	30,39	24,07	0,29	6,45

ALNOR® ventilation systems
is a legally protected trademark and technical patent. All rights reserved.

C2..Q-.. 2-way valve



Ball valve, adjustable kvs, brass body and spindle. Designed for operation with on/off rotary actuators and three-position control. Works in either direction of flow.

Type	DN (mm)	Female thread Rp (inch)	Kvs (adjustable)	PN
C215Q-J	15	1/2	0.4-4.8	16
C220Q-K	20	3/4	0.5-8	16

CQ230A ON/OFF actuator for C2..Q- 2-way valves

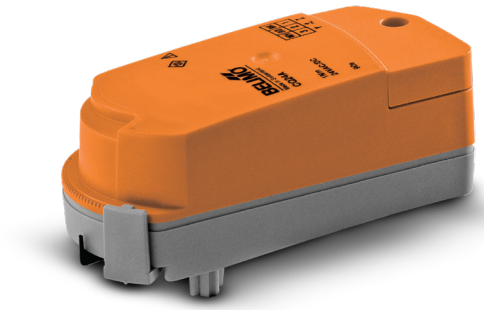

230 V rotary actuator; on/off or 3-position control. Adjusts the kvs setting in C2..Q-.. valves.

Power supply	Power input, running/standby	Torque //	Travel time	Range of motion
230V	1 W / 0,7 W	1 Nm	75 s	90°

R3..-xx-B.. 3-way valve



Control ball valve for analogue-based adjustment of water flow rate in heating systems. The valve is operated by a rotary actuator.

Type	DN (mm)	Female thread Rp (inch)	Kvs (adjustable)	PN
R3015-P63-B1	15	1/2	0.63	16
R3015-1-B1	15	1/2	1	16
R3015-1P6-B1	15	1/2	1.6	16
R3015-2P5-B1	15	1/2	2.5	16
R3015-4-B1	15	1/2	4	16
R3020-6P3-B1	20	3/4	6.3	16

ALNOR® ventilation systems
is a legally protected trademark and technical patent. All rights reserved.

Accessories for HDW water heaters

TRY230 ON/OFF actuator for R3..xx-B.. 3-way valves



230 V on-off rotary actuator. Allows manual switching.

Power supply	*Power input*	*Torque //*	*Travel time*	*Range of motion*
230V	1 W	2 Nm	35 s	90˚

LCT indoor thermostat



Electronic room thermostat with an LCD, intended for operation of 2-way and 3-way valves installed with HDW water heaters using 230 V signals.

Power supply: 230V / 50-60 Hz
Protection rating: IP20
Temperature control range: +5 to +30˚C
Switch: ON/OFF

AKF10 duct air temperature sensor



The AKF10 ducted air temperature sensor is connected to the LCT room control thermostat to operate an HDW water heater valve according to the temperature of the air exhaust duct.

Temperature range: -50 to +160˚C
Length: 100 mm, Ø7 mm.

Other length sizes available on request: 50/150/200/250/300 mm.

ALNOR® ventilation systems
is a legally protected trademark and technical patent. All rights reserved.

Duct electric heater
HDE



Description

HDE duct electric heaters are designed for use in ventilation systems which require raising or stabilizing the supplied air temperature.
The heater's enclosure is made from galvanized steel sheet. The heating resistors are made from stainless steel. The heating resistors form a spiral to ensure homogeneous heating of the air stream volume passing through them.
The external terminal box houses the connection terminal strip and the overtemperature protection.
The overtemperature protection is a system of two thermostats. The first thermostat is an automatic-reset temperature limiter set to trip at +60˚C. The other thermostat is a manual temperature limiter set to trip at +90˚C (once tripped, this device needs to be reset by hand).
The HDE ducted electric heater features EPDM gaskets at the connection ends.
The HDE can be installed in
in a vertical or horizontal duct, irrespective of the air flow direction.

The HDE ducted electric heater supports external temperature controllers and the PULSER controller.

Note:
When choosing a ducted electric heater, note that the supplied air temperature cannot exceed 40˚C.
The minimum air flow rate across the ducted electric heater must be 1.5 m/s.

Product code example

Product code: **HDE - 125 - 1,2**

type
Ød
power factor

Power factor: 1.2 x 1000 = 1200 W

Dimensions

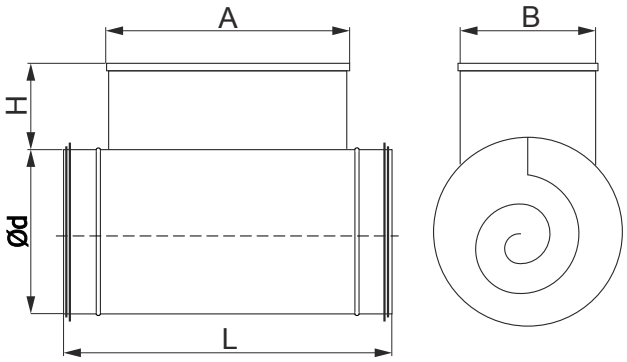

Type	Ød (mm)	A (mm)	B (mm)	H (mm)	L (mm)
HDE-100	100	280	100	110	380
HDE-125	125	280	100	110	380
HDE-150	150	280	120	110	380
HDE-160	160	280	120	110	380
HDE-200	200	300	160	110	400
HDE-250	250	300	190	110	400
HDE-315	315	300	190	110	400
HDE-355	355	300	240	110	430
HDE-400	400	300	240	110	430

ALNOR® ventilation systems
is a legally protected trademark and technical patent. All rights reserved.

Duct electric heater

HDE

Technical specifications

Type	Power (W)	Voltage (V)	Number of heating resistors (pcs)
HDE-100-0,3	300	1 x 230	1
HDE-100-0,6	600	1 x 230	2
HDE-100-0,9	900	1 x 230	3
HDE-100-1,2	1200	1 x 230	4
HDE-125-0,3	300	1 x 230	1
HDE-125-0,6	600	1 x 230	2
HDE-125-0,9	900	1 x 230	3
HDE-125-1,2	1200	1 x 230	4
HDE-125-1,5	1500	1 x 230	3
HDE-150-0,5	500	1 x 230	1
HDE-150-1,0	1000	1 x 230	2
HDE-150-1,5	1500	1 x 230	3
HDE-150-2,0	2000	1 x 230	4
HDE-160-0,5	500	1 x 230	1
HDE-160-1,0	1000	1 x 230	2
HDE-160-1,5	1500	1 x 230	3
HDE-160-2,0	2000	1 x 230	4
HDE-200-0,5	500	1 x 230	1
HDE-200-1,0	1000	1 x 230	2
HDE-200-1,5	1500	1 x 230	3
HDE-200-2,0	2000	1 x 230	4
HDE-200-3,0	3000	1 x 230	2
HDE-200-4,5	4500	3 x 400	3
HDE-250-0,5	500	1 x 230	1
HDE-250-1,0	1000	1 x 230	2
HDE-250-1,5	1500	1 x 230	3
HDE-250-2,0	2000	1 x 230	4
HDE-250-3,0	3000	1 x 230	2
HDE-250-4,5	4500	3 x 400	3
HDE-315-3,0	3000	1 x 230	2
HDE-315-4,5	4500	3 x 400	3
HDE-315-9,0	9000	3 x 400	6
hde-355-4,5	4500	3 X 400	3
HDE-355-9,0	9000	3 x 400	3
HDE-400-4,5	4500	3 X 400	3
HDE-400-9,0	9000	3 x 400	3
HDE-400-18,0	18000	3 x 400	6

Connection diagram

Single-phase HDE ducted electric heater with a total power ≤ 2000 W

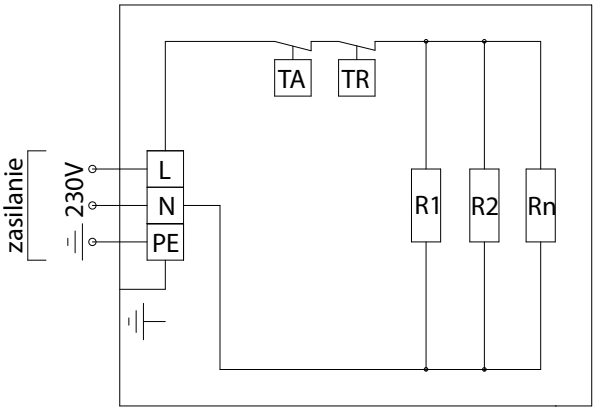

L, N - 1 x 230V, 50 Hz single-phase power supply
PE - protective conductor
R1, R2…Rn - heating resistors
TA - automatic temperature limiter, trips at +60˚C (with automatic reset
TR - temperature limiter with manual reset, trips at +90˚C (non-automatic)

Single-phase HDE ducted electric heater with a total power ≤ 3000W

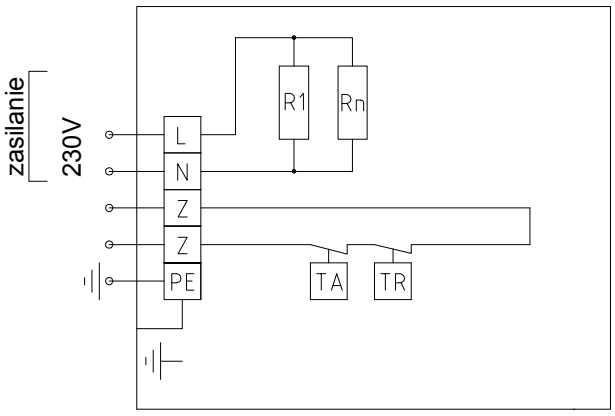

L, N - 1 x 230V, 50 Hz single-phase power supply
PE - protective conductor
R1, R2…Rn - heating resistors
Z-Z - temperature limiter terminals
TA - automatic temperature limiter, trips at +60˚C (with automatic reset))
TR - temperature limiter with manual reset, trips at +90˚C (non-automatic)

ALNOR® ventilation systems
is a legally protected trademark and technical patent. All rights reserved.

Connection diagram

Single-phase HDE duct electric heater with a total power ≤ 4500 W / 9000 W

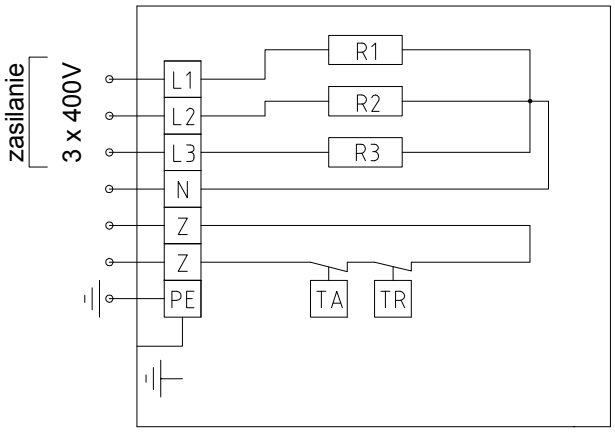

L1, L2, L3, N - 3 x 400V, 50 Hz three-phase power supply
PE - protective conductor
R1, R2…Rn - heating resistors
Z-Z - temperature limiter terminals
TA - automatic temperature limiter, trips at +60˚C (with automatic reset)
TR - temperature limiter with manual reset, trips at +90˚C (non-automatic)

Single-phase HDE duct electric heater with a total power ≤ 9000 W / 18000 W

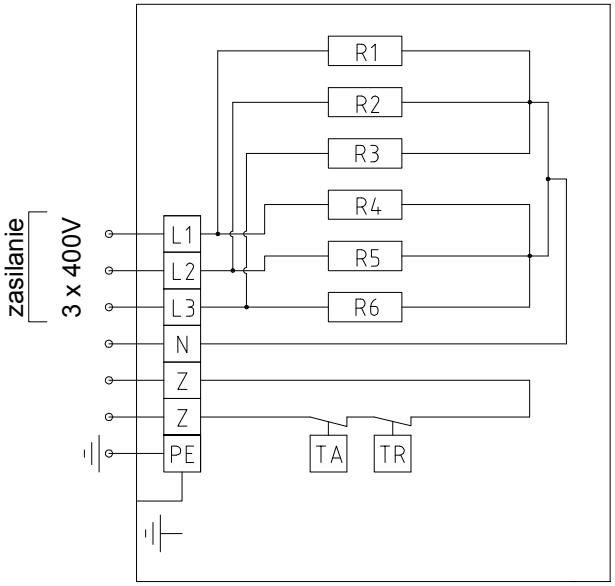

L1, L2, L3, N - 3 x 400V, 50 Hz three-phase power supply
PE - protective conductor
R1, R2…Rn - heating resistors
Z-Z - temperature limiter terminals
TA - automatic temperature limiter, trips at +60˚C (with automatic reset)
TR - temperature limiter with manual reset, trips at +90˚C (non-automatic)

Technical specifications

Selection chart for HDE ducted electric heaters with a maximum total power of 2000 W

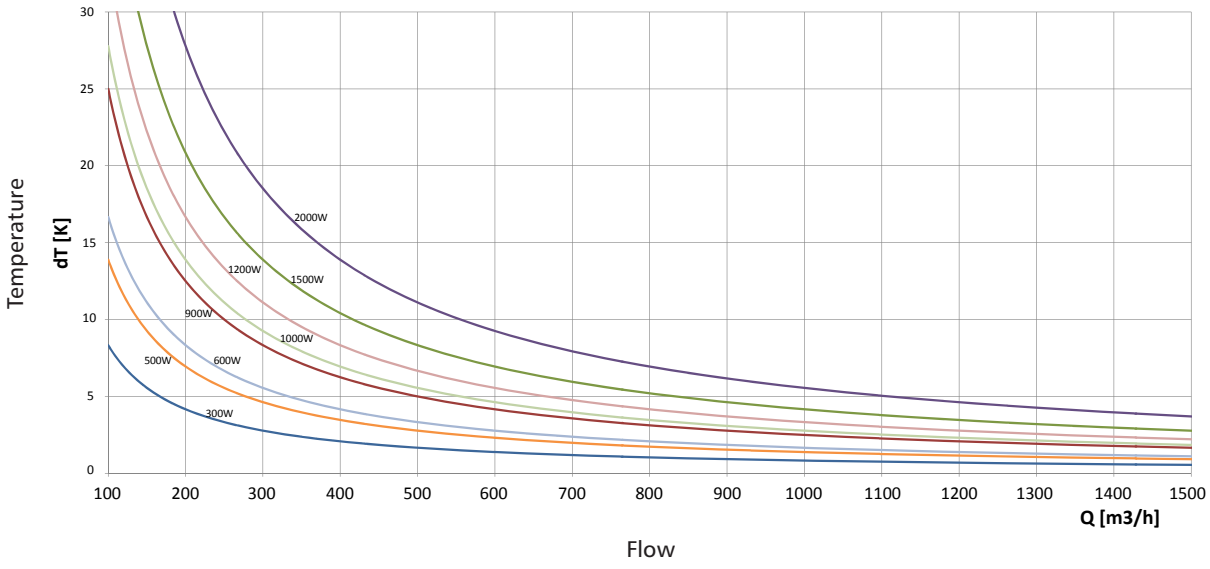

ALNOR® ventilation systems
is a legally protected trademark and technical patent. All rights reserved.

Duct electric heater

HDE

Technical specifications

Selection chart for HDE duct electric heaters with a maximum total power of 3000 W / 4500 W / 9000 W / 18000 W

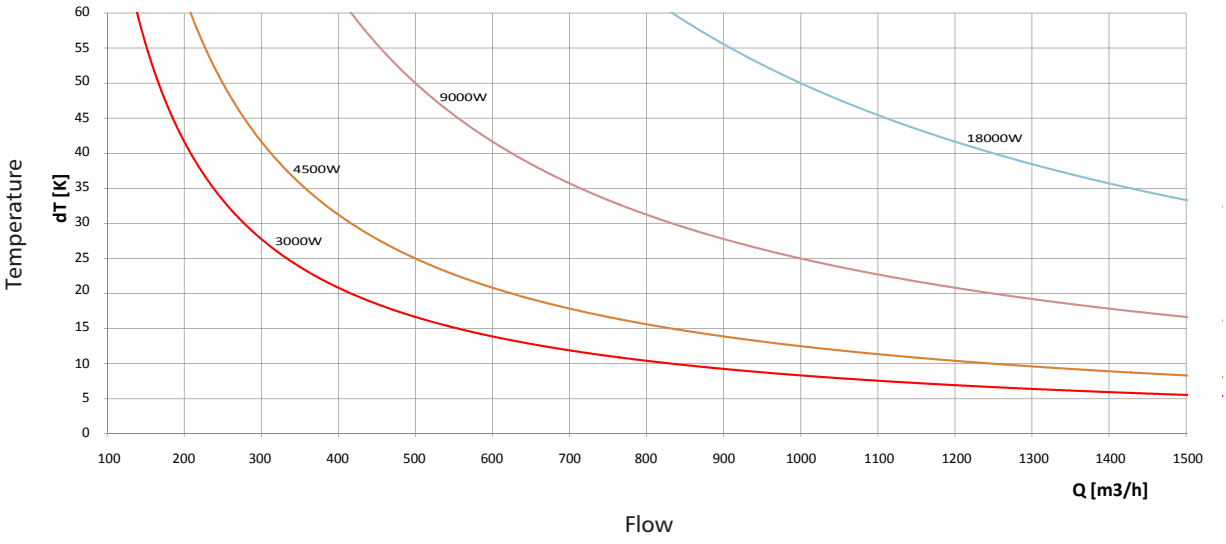

The characteristics are a graphic representation of the following relation: **P = Q x cw x dT x p**, with:
P — heating power of the ducted electric heater (W)
Q — air output from the ducted electric heater (m^3/h)
cw = 1005 — specific heat of air (J/kgK)
dT — temperature difference (K)
p = 1.29 — air density (kg/m^3)
once reduced: **P = Q x 0.36 x dT**

Available combinations



HDE 230V duct electric heater

+



Pulser controller



HDE 230V ducted electric heater

+



Pulser controller

+



TG-K330 ducted air temperature sensor

ALNOR® ventilation systems
is a legally protected trademark and technical patent. All rights reserved.

Available combinations



HDE 400V duct electric heater

+



TTC2000 controller



HDE 400V duct electric heater

+



TTC2000 controller

+



TG-K330 duct air temperature sensor

ALNOR® ventilation systems
is a legally protected trademark and technical patent. All rights reserved.

Duct electric heater

HDE-CO

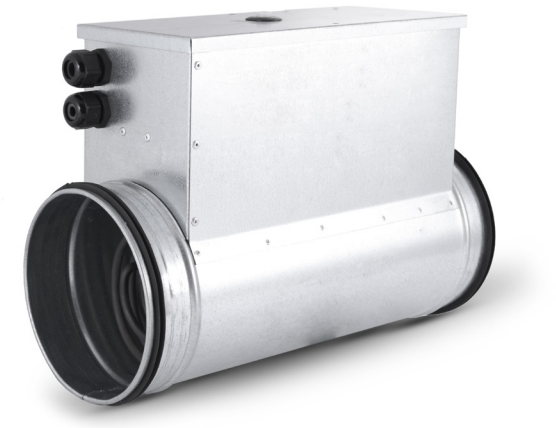

Description

The HDE-CO ducted electric heaters are designed for use in ventilation systems which require raising or stabilizing the supplied air temperature.
The heater's enclosure is made from galvanized steel sheet. The heating resistors are made from stainless steel. The heating resistors form a spiral to ensure homogeneous heating of the air stream volume passing through them.
The external terminal box houses the connection terminal strip and the overtemperature protection.
The overtemperature protection is a system of two thermostats. The first thermostat is an automatic-reset temperature limiter set to trip at +60˚C. The other thermostat is a manual temperature limiter set to trip at +90˚C (once tripped, this device needs to be reset by hand).
The HDE-CO ducted electric heater features EPDM gaskets at the connection ends.
The HDE-CO heaters can be installed in
in a vertical or horizontal duct,
irrespective of the air flow direction.
The HDE-CO ducted electric heater supports external temperature controllers.
HDE-CO1 — single-contactor ducted electric heater
HDE-CO2 — double-contactor ducted electric heater
Note:
When choosing a ducted electric heater, note that the supplied air temperature cannot exceed 40˚C.
The minimum air flow rate across the ducted electric heater must be less than 1.5 m/s.

Product code example

Product code: **HDE-CO - 125 - 1,2**

type
Ød
power factor

Power factor: 1.2 x 1000 = 1200 W

Dimensions

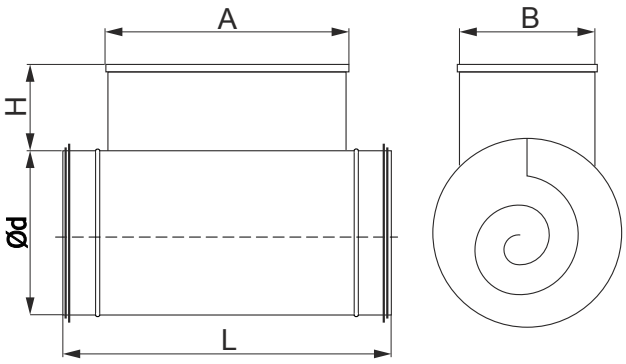

Type	Ød [mm]	A [mm]	B [mm]	H [mm]	L [mm]
HDE-CO-100	100	280	100	105	380
HDE-CO-125	125	280	100	105	380
HDE-CO-150	150	280	120	105	380
HDE-CO-160	160	280	120	105	380
HDE-CO-200	200	300	160	105	400
HDE-CO-250	250	300	190	105	400

ALNOR® ventilation systems
is a legally protected trademark and technical patent. All rights reserved.

Technical specifications

Type	Moc [W]	Napięcie [V]	Ilość grzałek [szt.]	Ilość styczników [szt.]
HDE-CO1-100-0,3	300	230	1	1
HDE-CO1-100-0,6	600	230	2	1
HDE-CO1-100-0,9	900	230	3	1
HDE-CO1-100-1,2	1200	230	4	1
HDE-CO1-125-0,3	300	230	2	1
HDE-CO1-125-0,6	600	230	2	1
HDE-CO1-125-0,9	900	230	3	1
HDE-CO1-125-1,2	1200	230	4	1
HDE-CO1-125-1,5	1500	230	3	1
HDE-CO1-150-0,5	500	230	1	1
HDE-CO1-150-1,0	1000	230	2	1
HDE-CO1-150-1,5	1500	230	3	1
HDE-CO1-150-2,0	2000	230	4	1
HDE-CO1-160-0,5	500	230	1	1
HDE-CO1-160-1,0	1000	230	2	1
HDE-CO1-160-1,5	1500	230	3	1
HDE-CO1-160-2,0	2000	230	4	1
HDE-CO1-200-0,5	500	230	1	1
HDE-CO1-200-1,0	1000	230	2	1
HDE-CO1-200-1,5	1500	230	3	1
HDE-CO1-200-2,0	2000	230	4	1
HDE-CO1-250-0,5	500	230	1	1
HDE-CO1-250-1,0	1000	230	2	1
HDE-CO1-250-1,5	1500	230	3	1
HDE-CO1-250-2,0	2000	230	4	1
HDE-CO2-100-0,6	600	230	2	2
HDE-CO2-100-1,2	1200	230	4	2
HDE-CO2-125-0,6	600	230	2	2
HDE-CO2-125-1,2	1200	230	4	2
HDE-CO2-150-1,0	1000	230	2	2
HDE-CO2-150-2,0	2000	230	4	2
HDE-CO2-160-1,0	1000	230	2	2
HDE-CO2-160-2,0	2000	230	4	2
HDE-CO2-200-1,0	1000	230	2	2
HDE-CO2-200-2,0	2000	230	4	2
HDE-CO2-250-1,0	1000	230	2	2
HDE-CO2-250-2,0	2000	230	4	2

Connection diagram

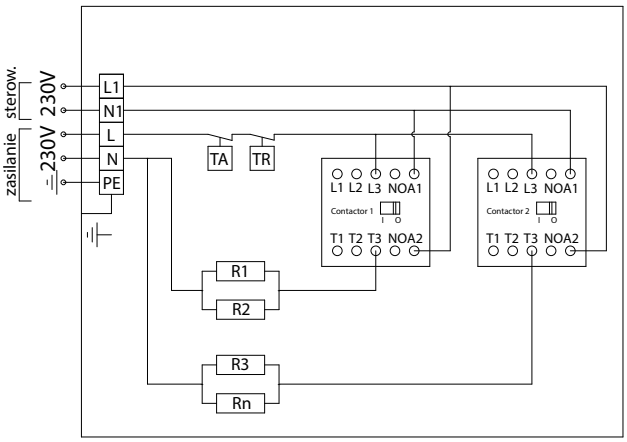

R1, R2…Rn – heating resistors
TA – automatic temperature limiter, trips at +60˚C (with automatic reset)
TR – emperature limiter with manual reset, trips at +90˚C (non-automatic)

ALNOR® ventilation systems
is a legally protected trademark and technical patent. All rights reserved.

Duct electric heater

HDE-CO

Technical specifications

Selection chart for the HDE-CO ducted electric heaters

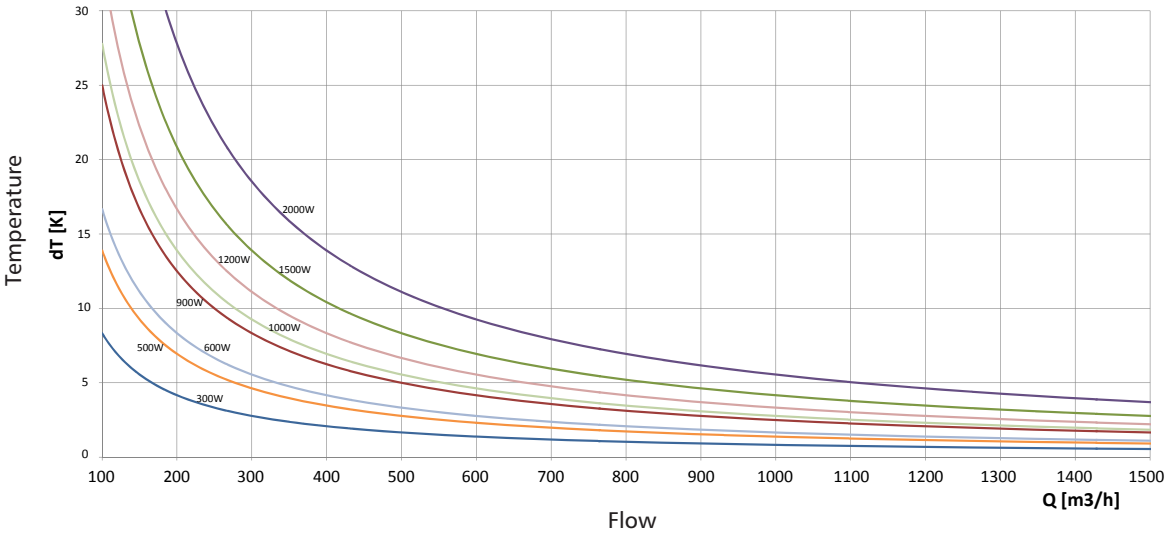

The characteristics are a graphic representation of the following relation: **P = Q x cw x dT x p**, with:
P — heating power of the ducted electric heater (W)
Q — air output from the ducted electric heater (m^3/h)
cw = 1005 — specific heat of air (J/kgK)
dT — temperature difference (K)
p = 1.29 — air density (kg/m^3)
once reduced: **P = Q x 0.36 x dT**

Available combinations



HDE-CO duct electric heater

+



HRU-MinistAir-W-450 HRV



HDE-CO1 duct electric heater

+



R31 room thermostat

ALNOR® ventilation systems
is a legally protected trademark and technical patent. All rights reserved.

Available combinations



HDE-CO1 duct electric heater

+



TM1-P electronic room thermostat

+



TG-K330 duct air temperature sensor

ALNOR® ventilation systems
is a legally protected trademark and technical patent. All rights reserved.

Controller for HDE duct electric heaters

PULSER



Description

The PULSER controller is designed for operating HVAC ducted heaters using separate room temperature control. The HDE ducted electric heaters operated using the PULSER controller, installed as an accessory for a heat exchanger and wired to a room temperature sensor or a ducted air temperature sensor help maintain the indoor temperature settings.
The PULSER controller has an integrated air temperature sensor. It also supports the TG-K300 external air temperature sensor, which can be installed in a ventilation duct.
The PULSER controller is very easy to install. The device requires a serial connection between the wiring of the power supply and that of the HDE ducted electric heater. The PULSER controller automatically detects the supply voltage and the external air temperature sensor (if connected).

Control method:
The PULSER controller features P and PI microprocessor-based control units. When monitoring slow temperature variations, the PULSER uses the P control unit; whenever a dynamic temperature variation is detected, the PULSER switches to the PI control unit.
The indoor air temperature is regulated by switching the total heating power output on and off, as required. The power supply is switched by a thyristor module. The switching cycle time is preset at 60 s. As a result, the ON time of 30 s and the OFF time of 30 s is equal to 50% of the total heating power output.

Product code example
Product code: **PULSER**

type

Dimensions

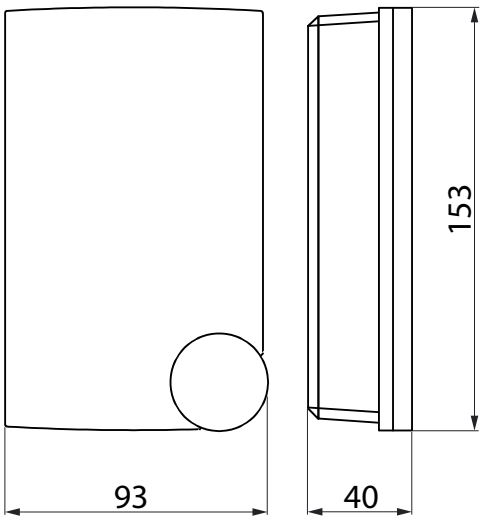

Technical specifications

Power supply: 230 V / 50-60 Hz or 400 V / 50-60 Hz
Max. power load: 3.6 kW at 230 V or 6.4 kW at 400 V
Protection rating: IP20
Max. operating temperature: +30˚C
Storage temperature: -40 to +50˚C
Max. ambient humidity: 90% RH
Temperature control range: 0 to +30˚C
Max. current: 16 **A**
Max. heating power generated: 20 W

ALNOR® ventilation systems
is a legally protected trademark and technical patent. All rights reserved.

Connection diagram

Connection of the PULSER controller to an HDE duct electric heater

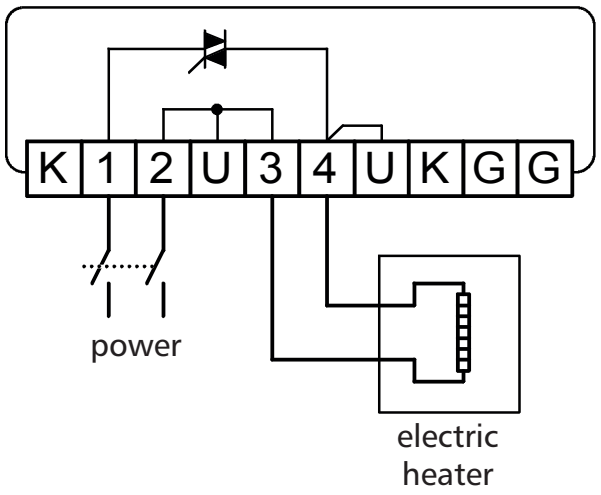

Connection of the PULSER controller to an HDE ducted electric heater and a TG-K330 external ducted air temperature sensor

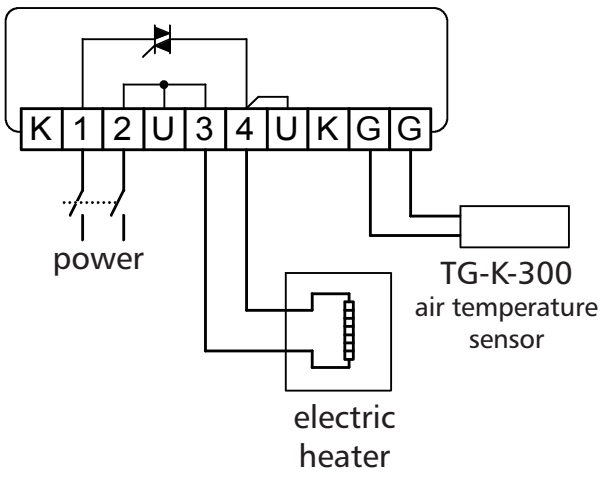

ALNOR® ventilation systems
is a legally protected trademark and technical patent. All rights reserved.

Controller for three-phase HDE duct electric heaters

TTC2000



Dimensions

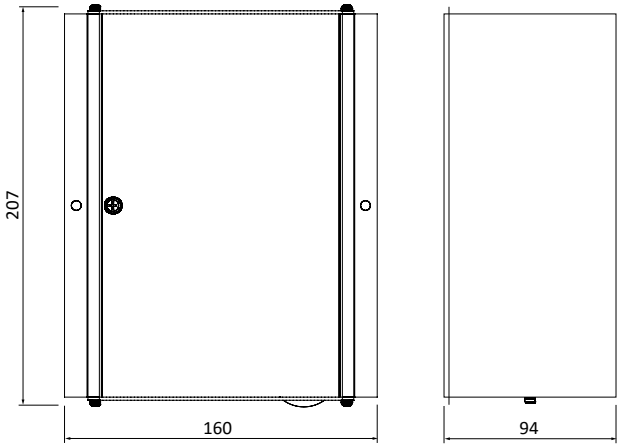

Description

The TTC thyristor controller is designed for managing three-phase HDE ducted electric heaters. The controller enables a pulsed power output control in reference to a temperature setting from 0 to +30˚C. The controller features an integrated air temperature sensor and supports an external air temperature input from e.g. a TG-K300 ducted air temperature sensor. The controller is connected in series between the power supply and the heater. The product is intended for wall mounting or cabinet installation.

Product code example
Product code: **TTC-2000**

type

Technical specifications

Power supply: 3×400 V / 50-60 Hz
Max. power load: 17 kW
Protection rating: IP30
Max. operating temperature: +35˚C
Storage temperature: -20 to +70˚C
Max. ambient humidity: 90% RH
Setting range: 0 to +30˚C
Max. current: 25 A / phase
Max. heating power generated: 45W
Dimensions: H: 207 mm, width: 104 mm D: 94 mm

Connection diagram

Connection of the TCC2000 controller to an HDE duct electric heater

1. Connect the heater 3-phase wiring to the L1 out, L2 out, and L3 out terminals.
2. Connect the PE wire to one of the PE terminals.
3. DO NOT connect the neutral wire.

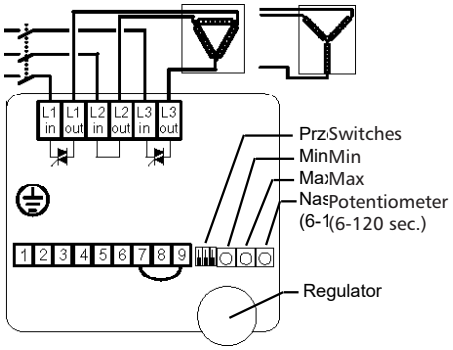

Connection of the TG-K330 external air temperature sensor

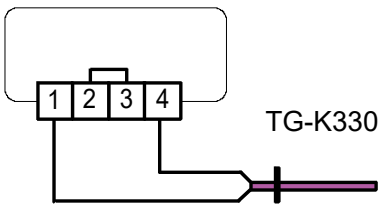

ALNOR® ventilation systems
is a legally protected trademark and technical patent. All rights reserved.

Duct air temperature sensor for HDE duct electric heaters

TG-K330



Dimensions

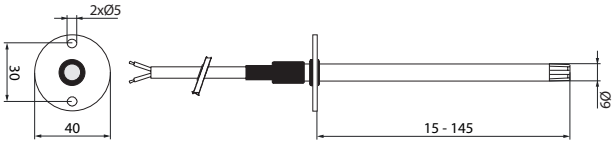

Description

The TK-G330 measures the air temperature in the ductwork and is compatible with the PULSER controller.
The TG-K330 ducted air temperature sensor provides adjustable heat sensor insertion depth.

Time constant: 38 s

Temperature range: 0 to +30 °C

Measurement accuracy: +/- 1 °C
Heat sensor insertion depth: 15 to 145 mm
Wiring length: 1500 mm
Protection class: IP20

Product code example
Product code: **TG-K330**

type

ALNOR® ventilation systems
is a legally protected trademark and technical patent. All rights reserved.

Indoor thermostat for HDE-CO duct electric heaters

R31



Dimensions

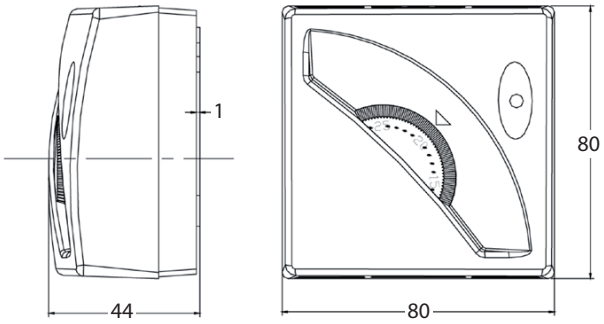

Description

The R31 room thermostat maintains the preset indoor temperature by managing the heating and ventilation system performance.
The R31 room thermostat controls the output of the connected ducted electric heater according to the user's temperature settings and the indoor air temperature sensor output.
The R31 room thermostat is very easy to install. The device requires a serial connection between the wiring of the power supply and that of the HDE-CO ducted electric heater.
The product is intended for wall mounting. The operating principle of the R31 room thermostat is based on a gas-filled membrane - the gas changes its volume with temperature. A change in the gas volume causes the membrane to move and switch the R31 room thermostat on and off, according to the range of movement.

Product code example

Product code: **R31**

type

Technical specifications

Power supply: 230V / 50-60 Hz
Protection rating: IP20
Max. operating temperature: +30˚C
Storage temperature: +50˚C
Max. ambient humidity: 90% RH
Temperature control range: +7 to +30˚C
Max. current: 16 A

Connection diagram

Connection of the R31 room thermostat to an HDE-CO ducted electric heater

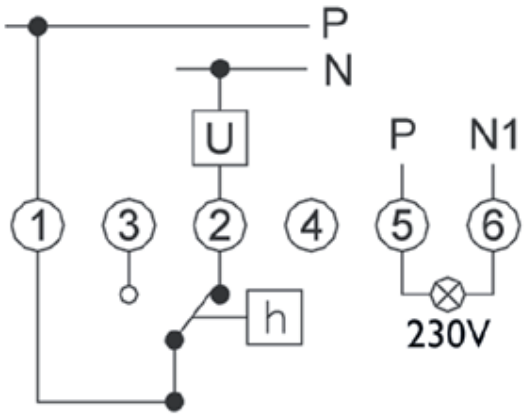

ALNOR® ventilation systems
is a legally protected trademark and technical patent. All rights reserved.

Electronic indoor thermostat

TM1-P



Dimensions

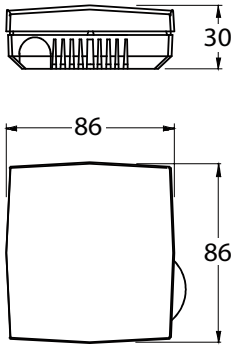

Description

The electronic indoor thermostat is intended for wall mounting. The thermostat has a single switching point and can be used for controlling heating or cooling appliances. The product features an integrated
temperature sensor and supports external air temperature sensors.

Product code example
Product code: **TM1-P**

type

Technical specifications

Power supply: 230V / 50-60 Hz
Power input: 1 W
Protection rating: IP30
Storage temperature: -40 to +50˚C
Max. ambient humidity: 90% RH
Temperature control range: 0 to +30˚C
Max. current: 16 A

ALNOR® ventilation systems
is a legally protected trademark and technical patent. All rights reserved.

Radial duct fan

DV



Description

The radial duct fan in a housing from galvanized steel sheet can be installed in a variety of mechanical ventilation systems for office rooms, commercial areas, catering space, industrial workshop floors, or cooling systems. The swept-back blade rotors deliver air at maximum efficiency, minimum noise, and high static pressure.

Note:
The DV-355 radial duct fans are finished by powder coating in RAL 9006.

Insulation class: B or F
Maximum operating temperature: +40 °C
Minimum operating temperature: -20 °C
Protection rating: IP55

Product code example
Product code: **DV - aaa**

type
ØA

Given the current EU Ecodesign of Energy Related Products Directive, the technical parameters of the fans may vary. See the specifications on the nameplate.

Dimensions

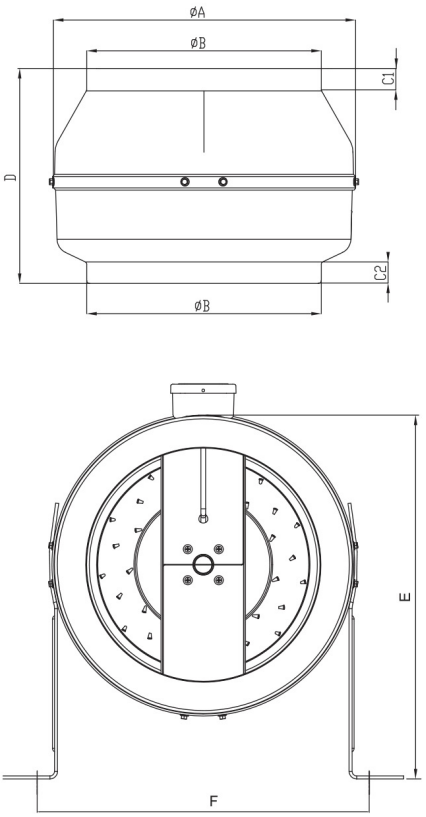

Type	ØA [mm]	ØB [mm]	C1 [mm]	C2 [mm]	D [mm]	E [mm]	F [mm]
DV-100	245	97	22	22	197	273	268
DV-125	245	122	20	20	188	273	268
DV-150	272	147	23	25	192	286	295
DV-160	272	157	23	25	192	286	295
DV-200	330	196	30	28	230	380	352
DV-250	330	247	30	28	227	380	352
DV-315	400	313	30	30	285	415	422
DV-355	400	352	30	30	378	415	422

ALNOR® ventilation systems
is a legally protected trademark and technical patent. All rights reserved.

Technical specifications

Type	*Voltage (V)*	*Frequency (Hz)*	*Maximum power consumption (W)*	*Rated current (A)*	*Rotational speed (rpm)*	*Output (m^3/h)*	*Noise level (dB)*	*Weight (kg)*
DV-100	230	50/60	60	0,3	2610/2960	240/275	44	2,6
DV-125	230	50/60	80	0,4	2325	315	43	2,7
DV-150	230	50/60	78	0,4	2450	420	46	3,0
DV-160	230	50/60	85	0,4	2550	440	45	3,2
DV-200	230	50/60	90	0,43	2300	735	46	4,4
DV-250	230	50/60	140	0,69	2400	1010	45	4,9
DV-315	230	50/60	160/210	0,8/1,1	2400	1450	48	6,8
DV-355	230	50/60	160/175	1/0,85	1450/1700	1300/1525	45	9

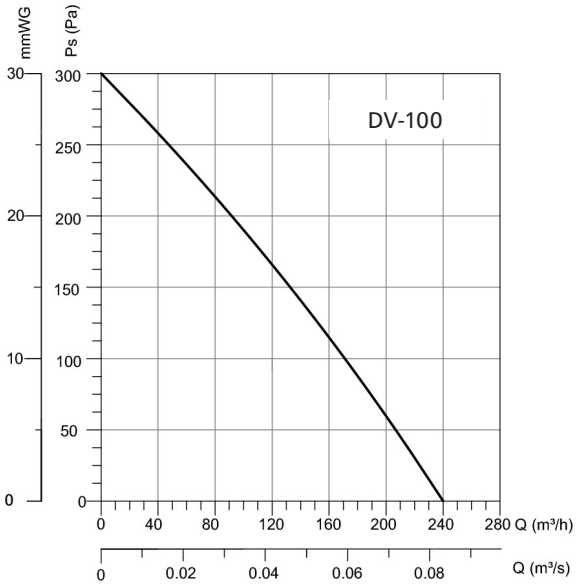

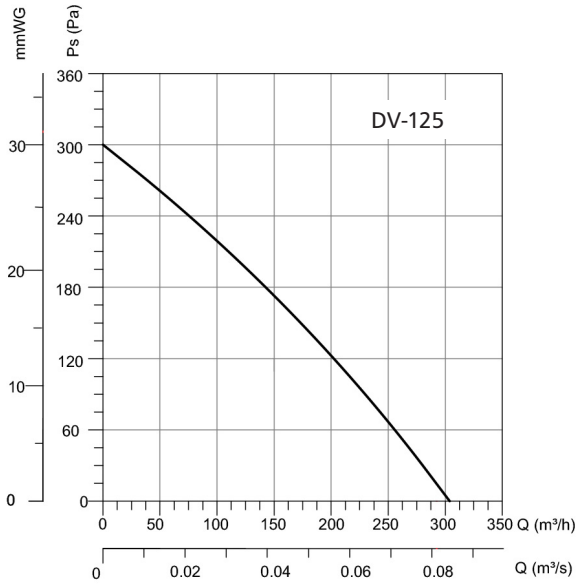

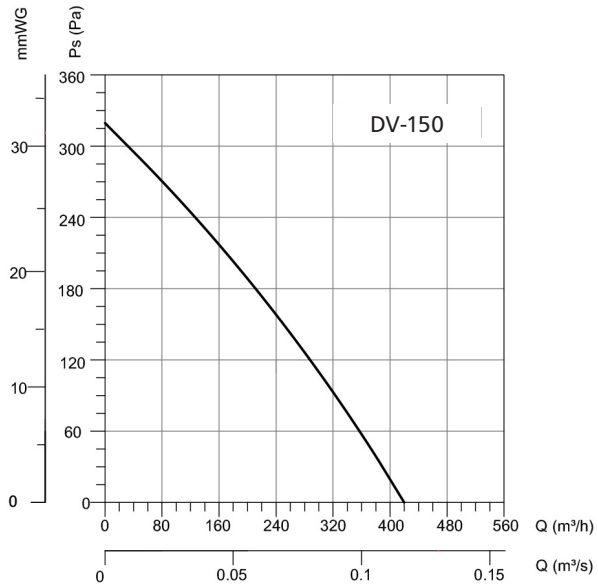

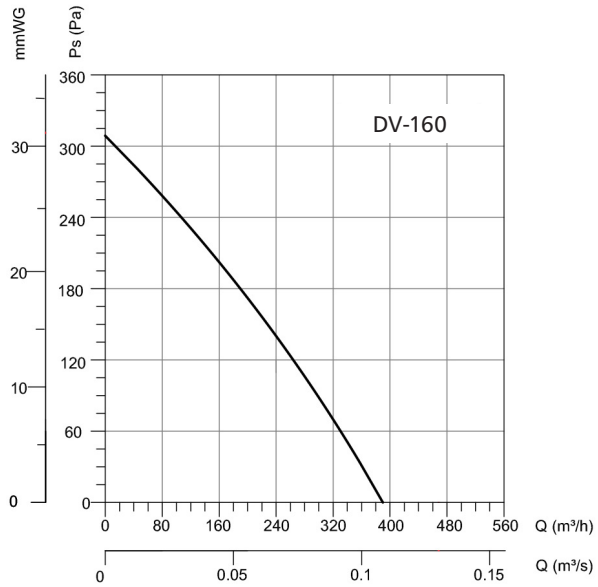

ALNOR® ventilation systems
is a legally protected trademark and technical patent. All rights reserved.

Radial duct fan

DV

Technical specifications

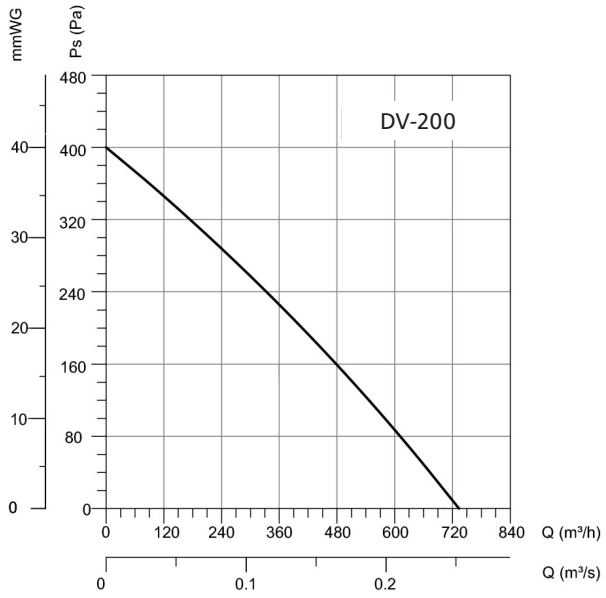

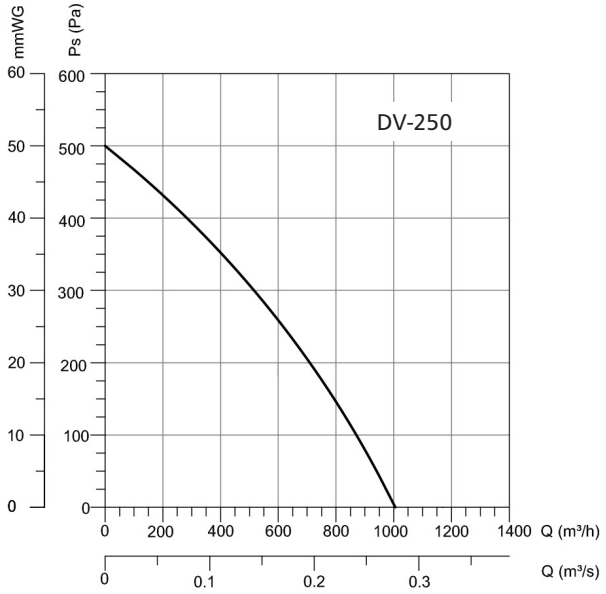

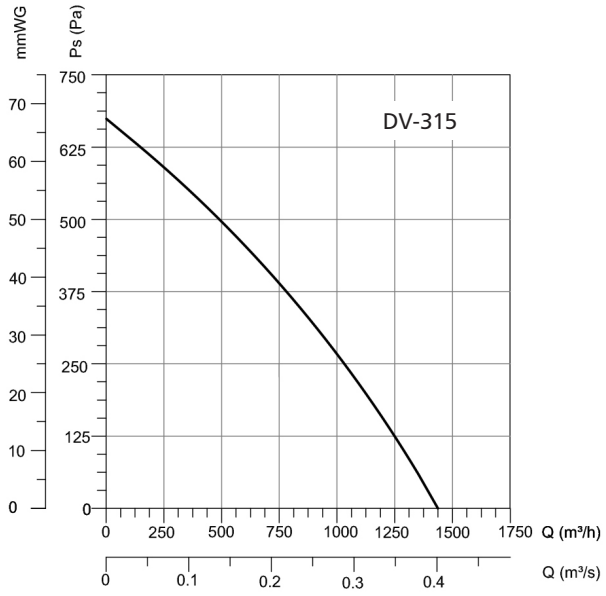

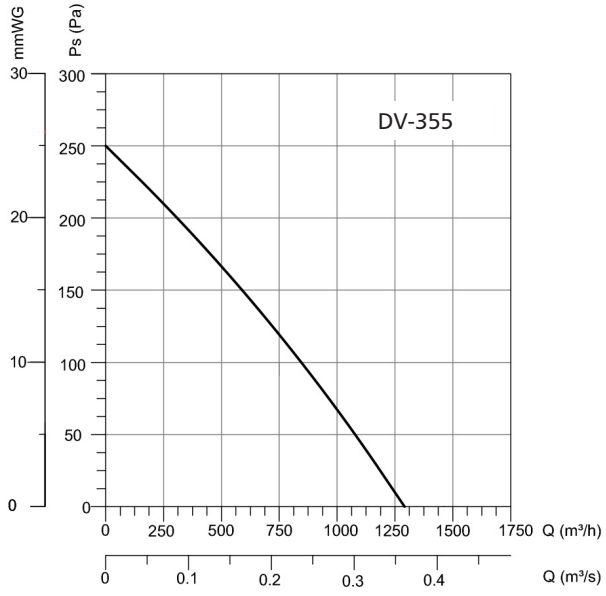

ALNOR® ventilation systems
is a legally protected trademark and technical patent. All rights reserved.

Energy class

Model	Noise level (dB)	Output (m^3/h)	Energy class
DV-100	44	240	F
DV-125	43	315	F
DV-150	46	420	F
DV-160	45	440	F
DV-200	46	735	E
DV-250	45	1010	E
DV-315	48	1450	F
DV-355	66	1300	E

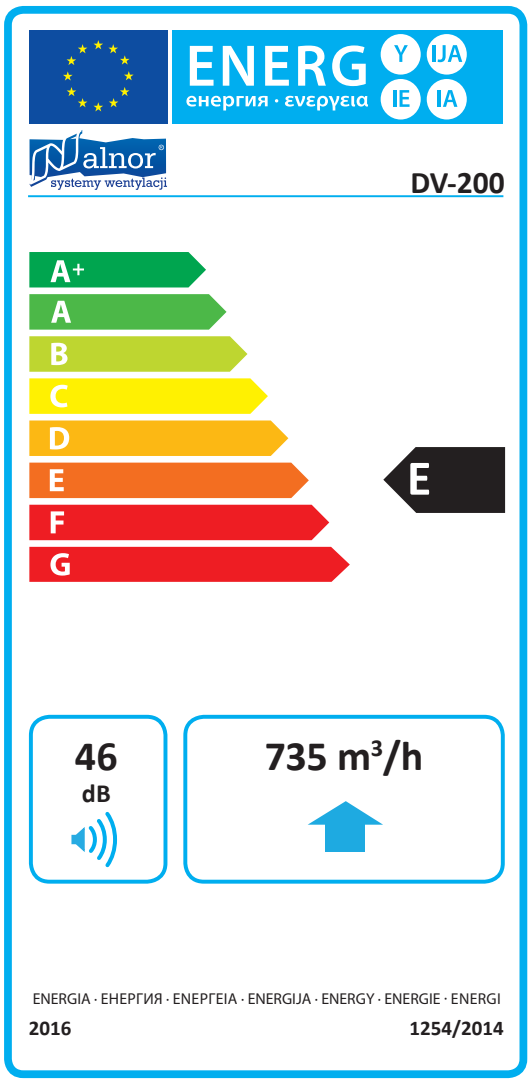

ALNOR® ventilation systems
is a legally protected trademark and technical patent. All rights reserved.

Round duct fan

DV-PP



Description

This round ducted fan model is designed for use in low-particulate ventilation systems and boasts a high performance at a low noise level. The ducted fan can be installed horizontally or vertically; the standardized design allows removal and maintenance without the need to open the ductwork.

Material:
- housing: PP (polypropylene)
- rotor: ABS

Protection rating: IP44 (DV-PP-100-130: IPX2)
Insulation class: B (except for DV-PP-100-130)

Product code example
Product code: **DV - aaa**

type
ØA

**Given the current EU Ecodesign of Energy Related Products Directive, the technical parameters of the fans may vary. See the specifications on the nameplate.*

Dimensions

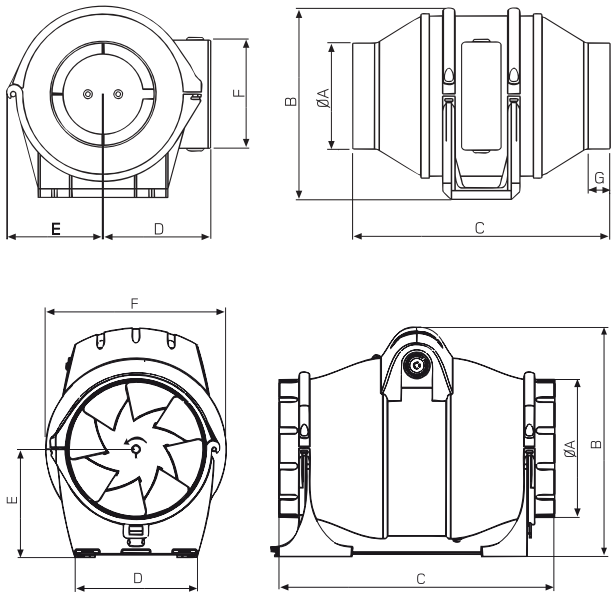

Type	ØA [mm]	B [mm]	C [mm]	D [mm]	E [mm]	F [mm]	G [mm]
DV-PP-100-130	98	177	238	100	89	100	20
DV-PP-100-270	98	230	310	130	115	170	20
DV-PP-125-320	122	217	262	100	100	168	21
DV-PP-150-560	147	244	293	130	115	192	21
DV-PP-160-560	157	244	313	130	115	192	21
DV-PP-200-910	197	278	354	142	140	230	52

ALNOR® ventilation systems
is a legally protected trademark and technical patent. All rights reserved.

Round duct fan

DV-PP

Technical specifications

Type	Output (m^3/h)	Power input (W)	Current (A)	Speed (rpm)	Voltage (V)	Noise level (dB)
DV-PP-100-130	130	25	0.16	2200	230	24
DV-PP-100-270	270/190	30/18	0.18/0.10	2300/1700	230	30/24
DV-PP-125-320	365/250	30/18	0.18/0.10	2300/1700	230	32/26
DV-PP-150-560	595/420	80/60	0.36//0.27	2700/2000	230	33/27
DV-PP-160-560	595/425	80/60	0.36/0.27	2700/2000	230	33/27
DV-PP-200-910	910/820/720	85/65/55	0.34/0.27/0.24	2700/2000/1800	230	39/34/32

Charts

DV-PP-100-130 fan flow characteristics

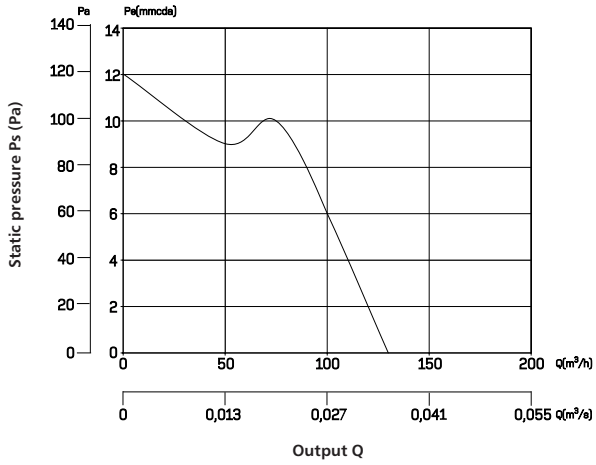

DV-PP-100-270 fan flow characteristics

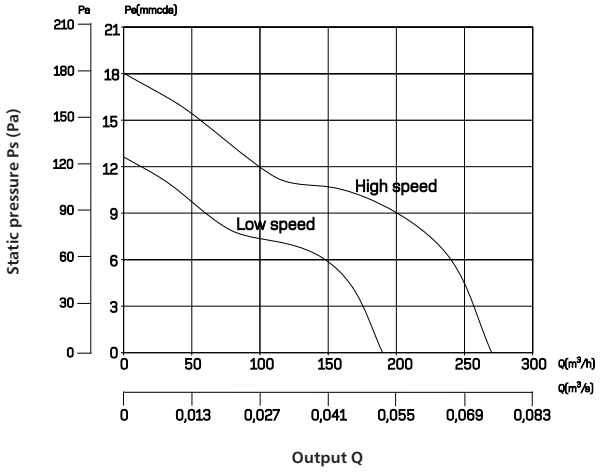

DV-PP-125-320 fan flow characteristics

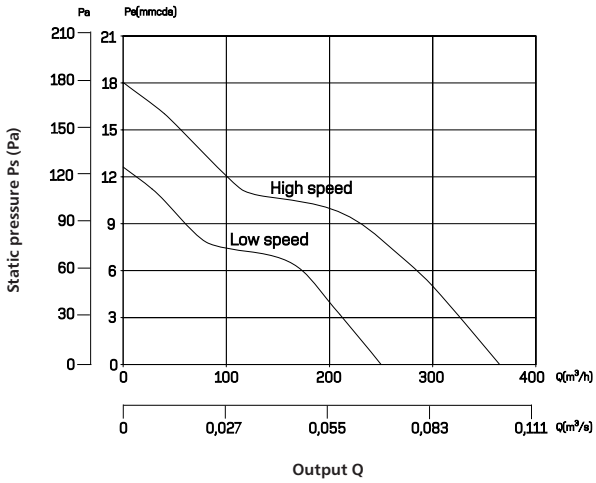

DV-PP-150-560 fan flow characteristics

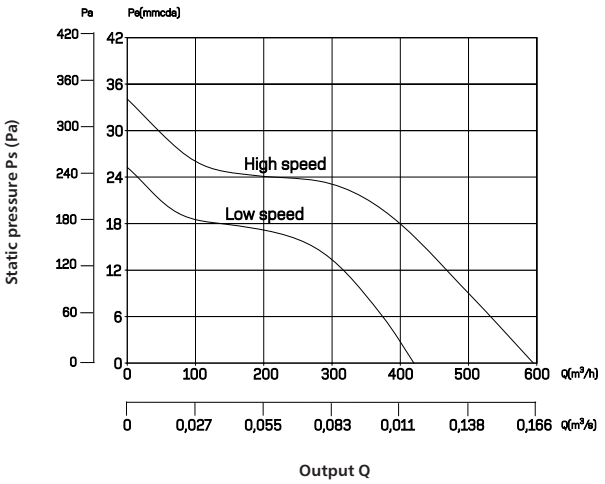

ALNOR® ventilation systems
is a legally protected trademark and technical patent. All rights reserved.

Round duct fan

DV-PP

Charts

DV-PP-160-560 fan flow characteristics

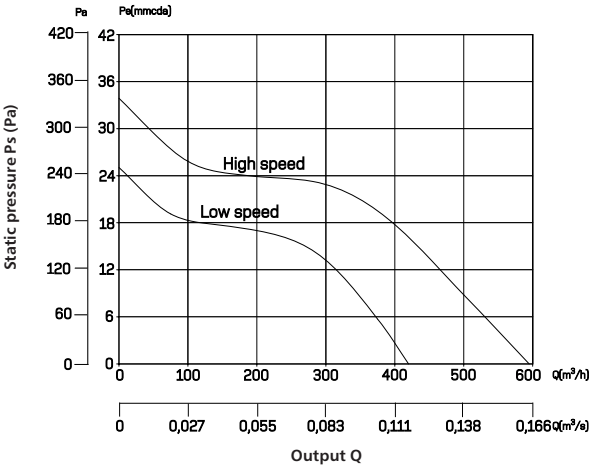

DV-PP-200-910 fan flow characteristics

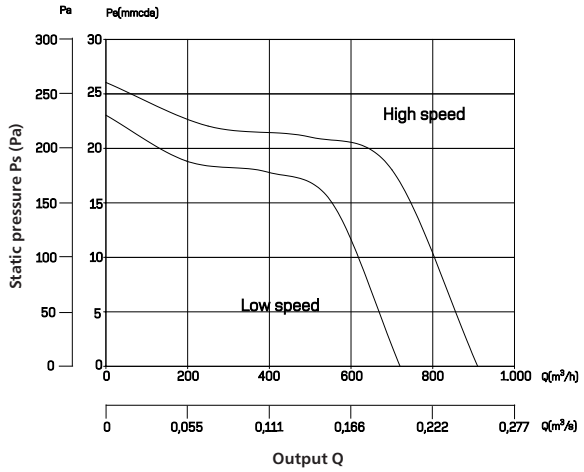

Energy class

Model	*Noise level (dB)*	*Output (m³/h)*	*Energy class*
DV-PP-100-130	24	130	E
DV-PP-100-270	30/24	270/190	E
DV-PP-125-320	32/26	365/250	E
DV-PP-150-560	33/27	595/420	E
DV-PP-160-560	33/27	595/425	E
DV-PP-200-910	39/34/32	910/820/720	E

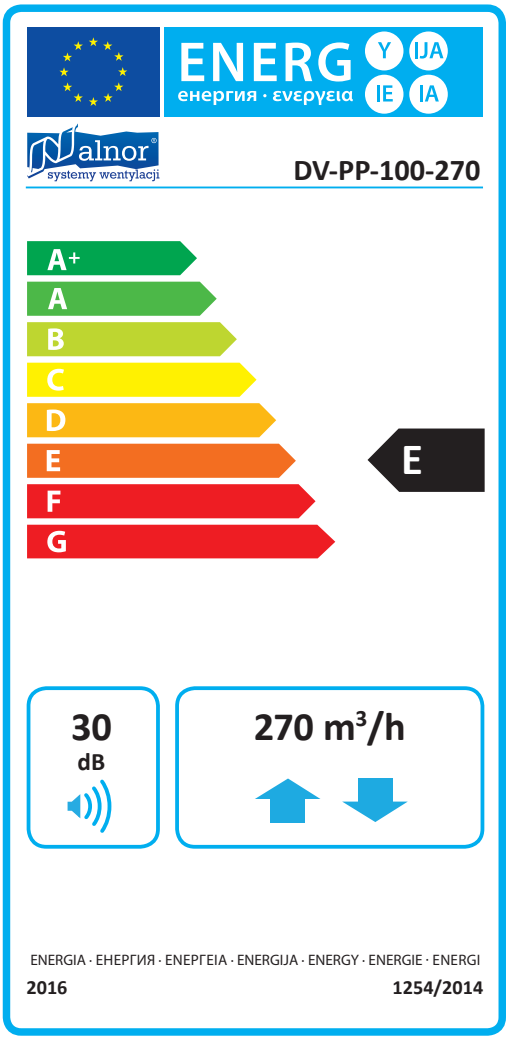

ALNOR® ventilation systems
is a legally protected trademark and technical patent. All rights reserved.

Duct fans for round ductwork systems

DV-PP-L

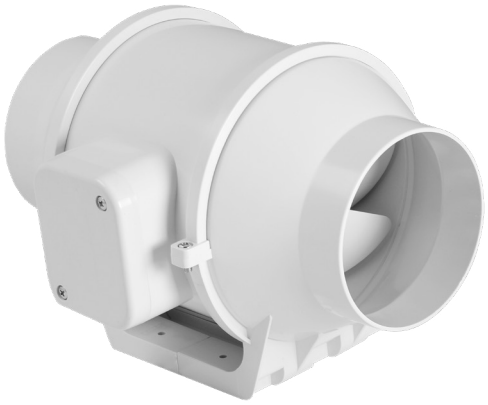

Description

The DV-PP-L ducted fans can supply or extract air through ductwork systems. The DV-PP-L ducted fans are a perfect solution for exhausting air from bathrooms and other room types. The small footprint of the DV-PP-L model allows easy installation in confined spaces.

Material:
- housing: PP (polypropylene)
- rotor: ABS

Protection rating: IP44

Product code example
Product code: **DV-PP-L - aaa**

type
ØA

Given the current EU Ecodesign of Energy Related Products Directive, the technical parameters of the fans may vary. See the specifications on the nameplate.

Dimensions

DV-PP-L-100

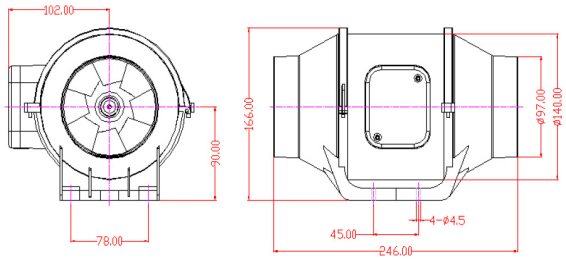

DV-PP-L-125

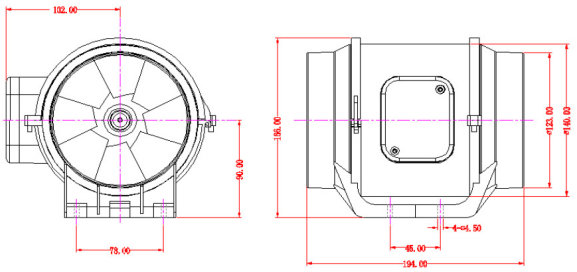

DV-PP-L-150

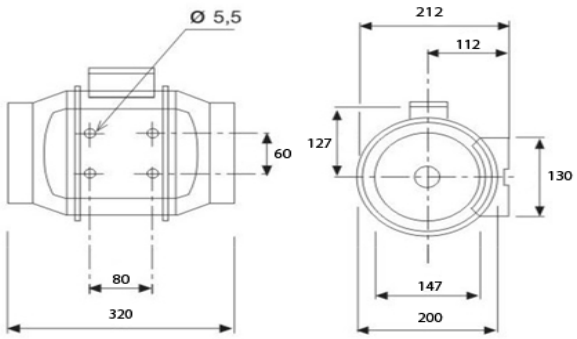

ALNOR® ventilation systems
is a legally protected trademark and technical patent. All rights reserved.

Duct fans for round ductwork systems

DV-PP-L

Technical specifications

Type	Speed (rpm)	Power input (W)	Current (A)	Output (m^3/h)	Noise level (dB)	Voltage (V)	Max temp. (°C)	Protection rating	Weight (KG)
DV-PP-L-100	2500	29	0,14	170	31	230	80	IP 44	1,5
DV-PP-L-125	2500	29	0,14	226	31	230	80	IP 44	1,5
DV-PP-L-150	2550	54	0.24	530	33	230	80	IP 44	2.7

Charts

DV-PP-L-100 fan flow characteristics

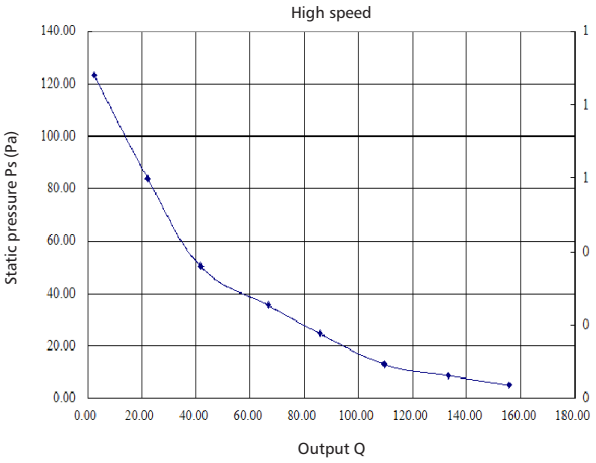

DV-PP-L-100 fan flow characteristics

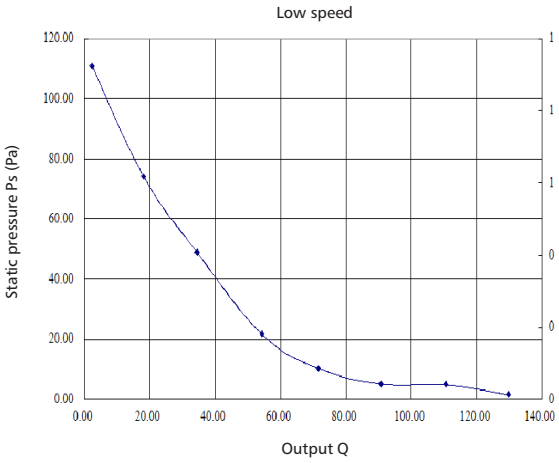

DV-PP-L-125 fan flow characteristics

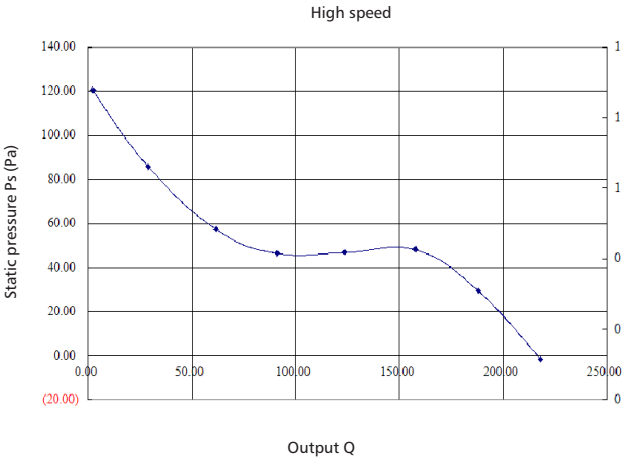

DV-PP-L-125 fan flow characteristics

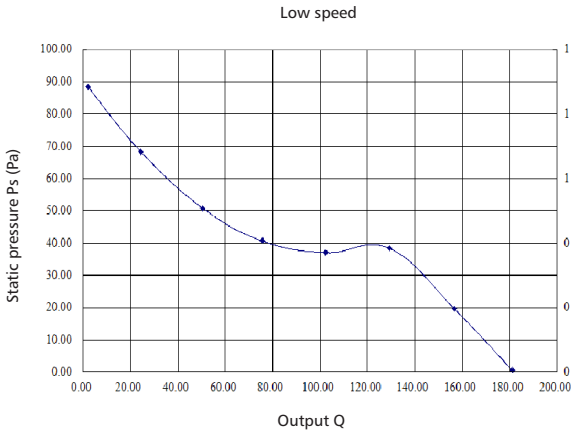

DV-PP-L-150 fan flow characteristics

ALNOR® ventilation systems
is a legally protected trademark and technical patent. All rights reserved.

DV-PP-L

Charts

DV-PP-L-150 fan flow characteristics

Low (LS) and high (HS) speed

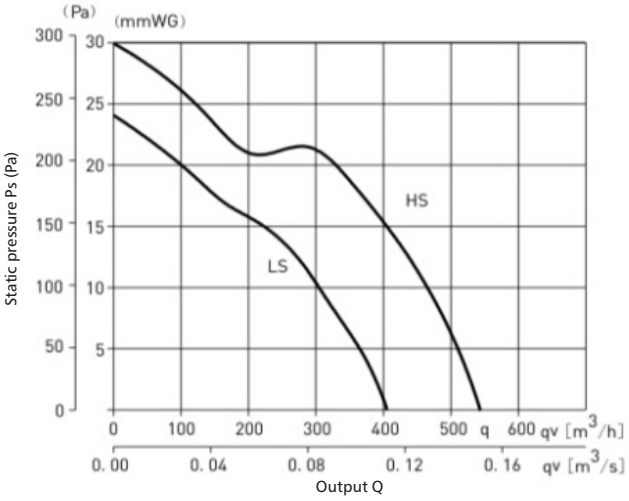

Energy class

Model	*Noise level (dB)*	*Output (m^3/h)*	*Energy class*
DV-PP-L-100	31	155	F
DV-PP-L-125	31	220	E
DV-PP-L-150	33	530	E

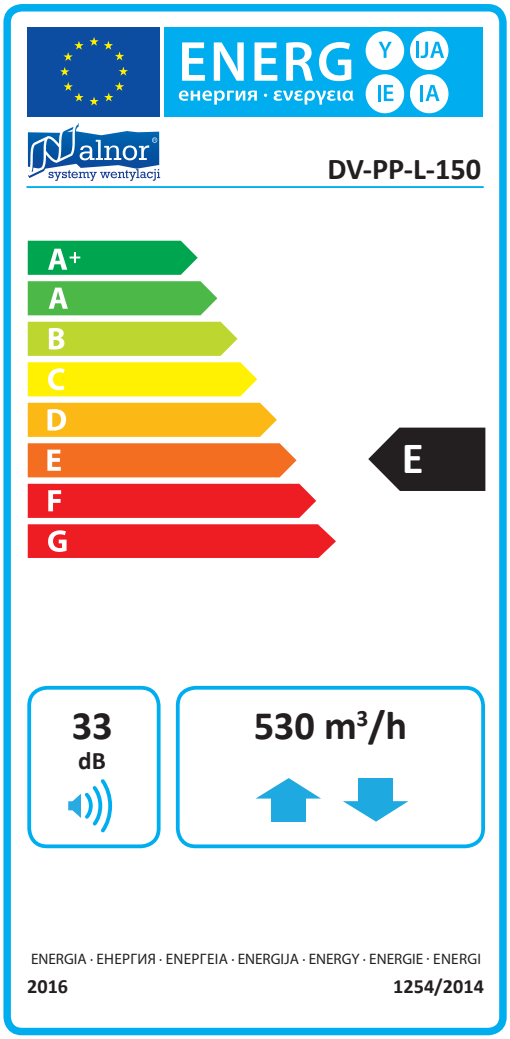

ALNOR® ventilation systems
is a legally protected trademark and technical patent. All rights reserved.

Square duct fans

DV-SQ

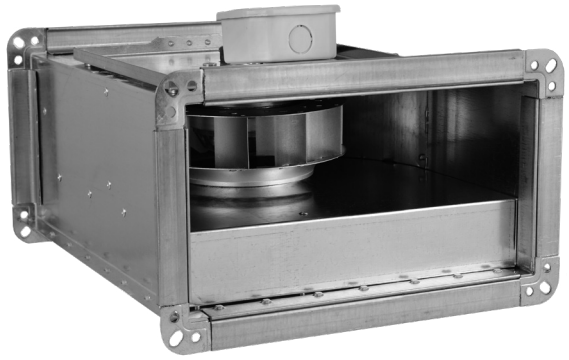

Description

This model is a square ducted fan. Square ducted fans are designed for installation medium to large areas and confined spaces. The DV-SQ square ducted fans have been designed and manufactured to provide high output, ensure reliable operation and provide easy direct connection with the ductwork.
The DV-SQ square ducted fans are intended for home, commercial and industrial ventilation systems, e.g. in bathrooms, WC, utility and technical rooms, pool rooms, engine rooms, warehouse floors, catering facilities, shopping areas, schools, office buildings, production facilities, hotels, entertainment facilities, fabrication shops, and local exhaust ventilation systems, to name a few of the potential applications.
Before installing a ducted fan on the roof, read carefully the operating and maintenance manual.

Material:
— housing: galvanized steel sheet
— rotor: galvanized steel sheet
Insulation class: B
Protection rating: IPX2

Product code example
Product code: **DV-SQ - aaa - bbb**

type
A
B

Given the current EU Ecodesign of Energy Related Products Directive, the technical parameters of the fans may vary. See the specifications on the nameplate.

Dimensions

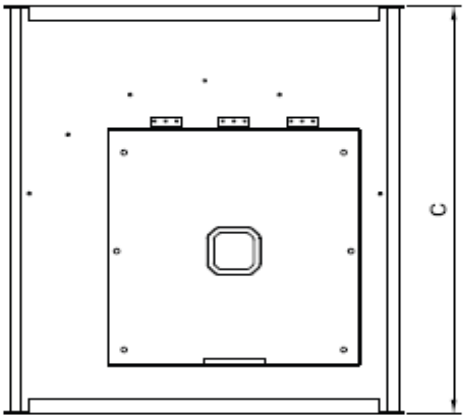

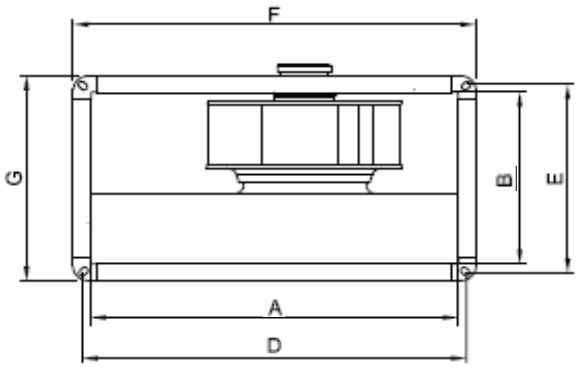

Type	A [mm]	B [mm]	C [mm]	D [mm]	E [mm]	F [mm]	G [mm]
DV-SQ-400-200	400	200	500	420	220	450	250
DV-SQ-600-350	600	350	760	620	370	650	400

ALNOR® ventilation systems
is a legally protected trademark and technical patent. All rights reserved.

Technical specifications

Type	Voltage (V)	Frequency (Hz)	Power (W)	Current (A)	Capacitor (μf)	Speed (rpm)	Air flow rate (m^3/h)	Noise level (dB(A))	Weight (kg)
DV-SQ-400-200	230	50	130	0.58	5.00	2675	1150	75	11
DV-SQ-600-350	230	50	380	1.7	8.00	1420	3400	78	32

Charts

DV-SQ fan flow characteristics

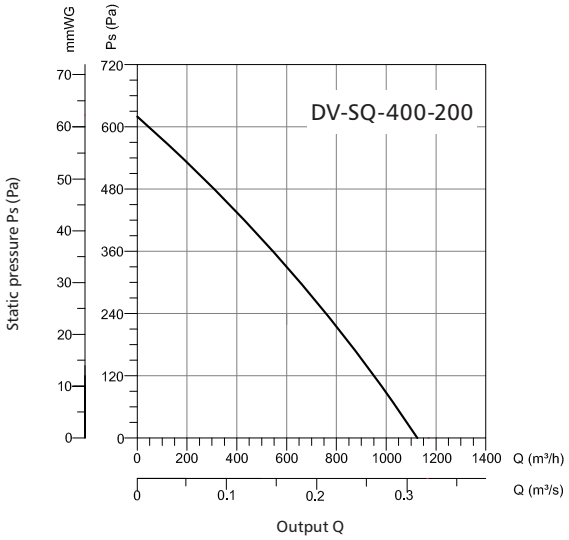

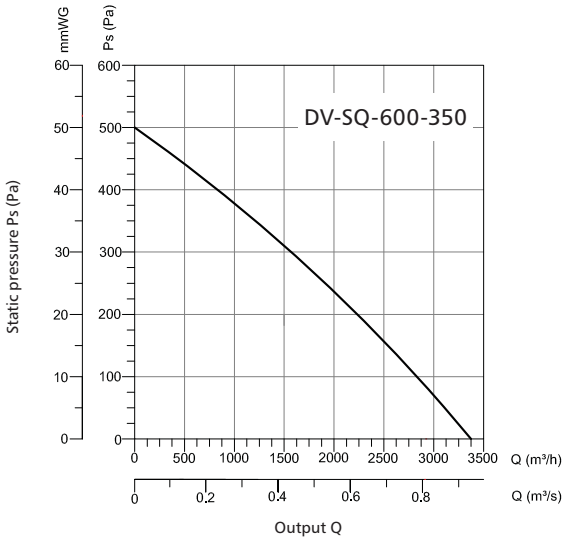

Energy class

Model	Noise level (dB)	Output (m^3/h)	Energy class
DV-SQ-400-200	75	1150	E
DV-SQ-600-350	78	3400	E

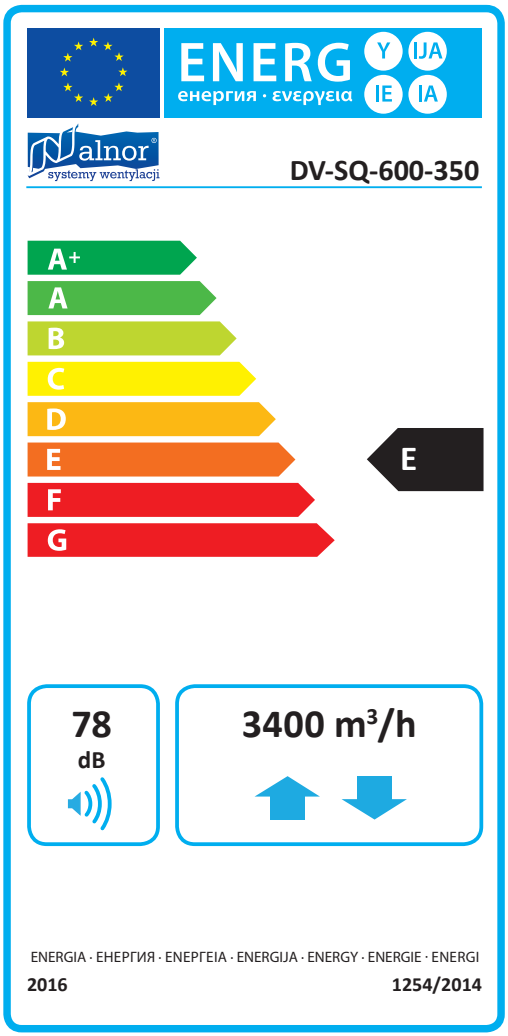

ALNOR® ventilation systems
is a legally protected trademark and technical patent. All rights reserved.

Horizontal air exhaust roof fans

DV-ROF-R

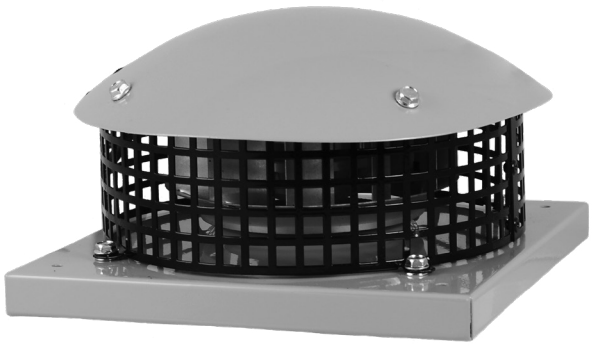

Description

The DV-ROF-R roof fan with horizontal air exhaust is available in two winding insulation classes: B and F. The DV-ROF roof fans offer a wide range of applications: industrial and general ventilation systems in production plants, hospitals, clubs, theatres, single-family houses or catering facilities. The air exhaust roof fans are designed for installation on sound-insulating fan roof bases.

Material:
— housing: electrostatic-coated iron sheet
— rotor: galvanized steel sheet
Insulation class: B or F
Protection rating: IPX4

Product code example
Product code: **DV-ROF-R - aaa**

type
ØA

*Given the current EU Ecodesign of Energy Related Products Directive, the technical parameters of the fans may vary. See the specifications on the nameplate.

Dimensions

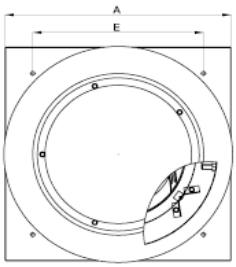

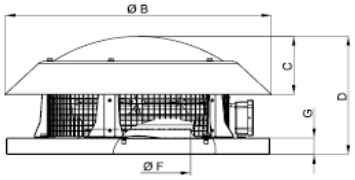

Type	A [mm]	B [mm]	C [mm]	D [mm]	E [mm]	F [mm]	G [mm]
DV-ROF-R-160	252	260	50	140	210	80	25
DV-ROF-R-180	252	260	50	140	210	80	25
DV-ROF-R-225	336	386	105	212	274	146	35
DV-ROF-R-250	370	386	105	225	290	163	35
DV-ROF-R-315	454	443	135	293	333	185	40
DV-ROF-R-355	595	595	135	285	450	234	40

ALNOR® ventilation systems
is a legally protected trademark and technical patent. All rights reserved.

Horizontal air exhaust roof fans

DV-ROF-R

Technical specifications

Type	Voltage (V)	Frequency (Hz)	Power (W)	Current (A)	Capacitor (µf)	Speed (rpm)	Air flow rate (m³/h)	Noise level (dB(A))	Temp. range [°C]	Weight (kg)
DV-ROF-R-160	230	50	65	0,3	2,0	2547	346	46	-20 +50	3,50
DV-ROF-R-180	230	50	80	0,35	2.5	2500	360	50	-20 +50	3,70
DV-ROF-R-225	230	50	130	0,6	5,0	2640	902	54	-20 +50	7,00
DV-ROF-R-250	230	50	120	0,8	6,0	2685	1212	55	-20 +50	8,00
DV-ROF-R-315	230	50	180	0,6	6,0	1400	1500	56	-20 +50	12,80
DV-ROF-R-355	230	50	220	1,1	6,0	1400	2400	65	-20 +50	18,00

Charts

DV-ROF-R fan flow characteristics

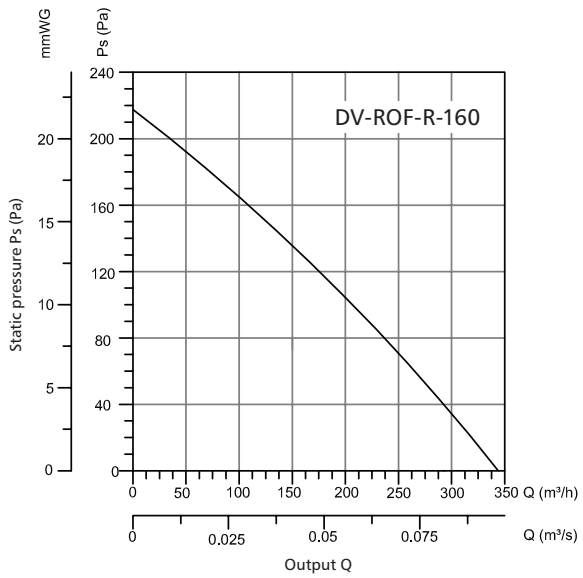

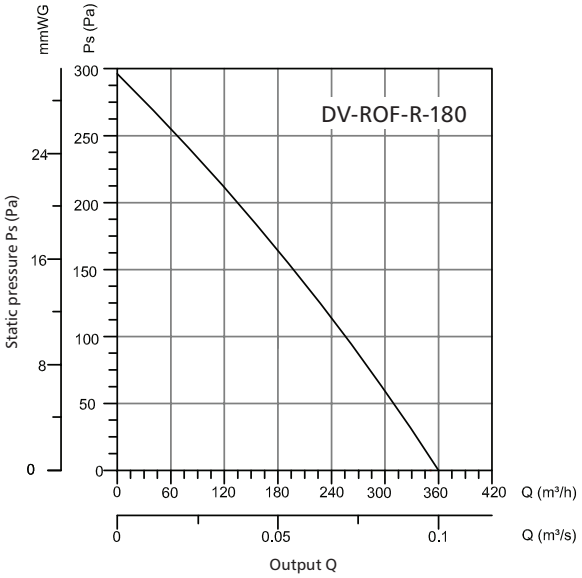

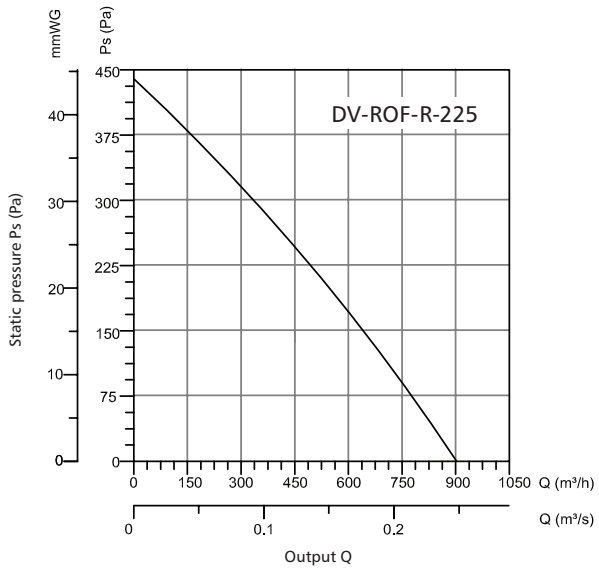

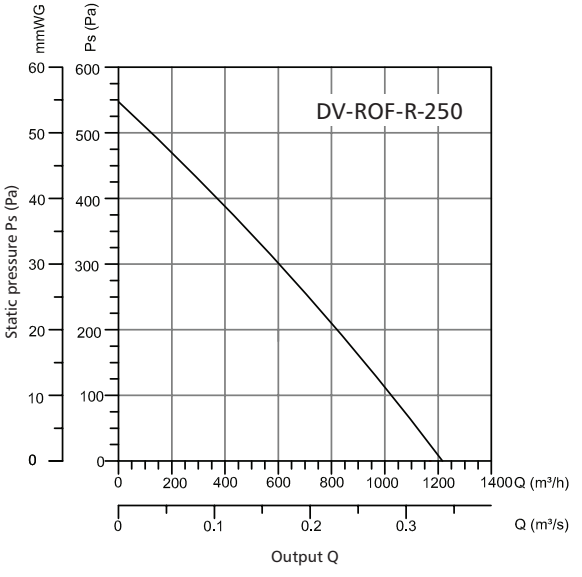

ALNOR® ventilation systems
is a legally protected trademark and technical patent. All rights reserved.

Horizontal air exhaust roof fans

DV-ROF-R

Charts

DV-ROF-R fan flow characteristics

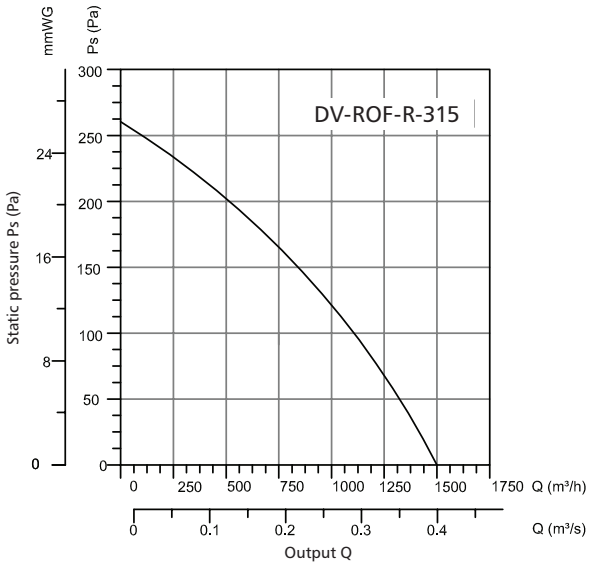

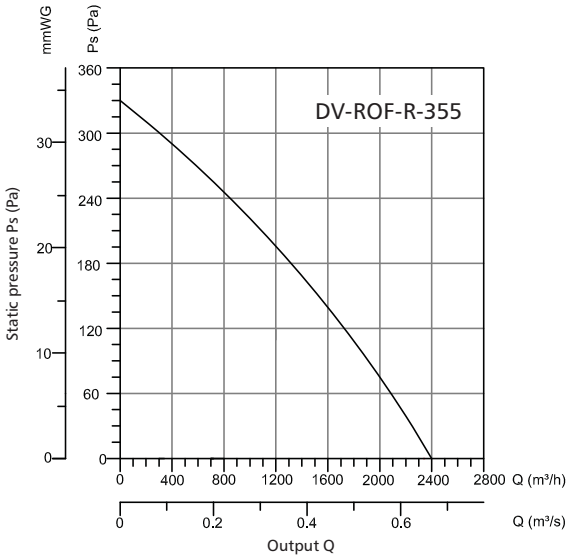

Energy class

Model	Noise level (dB)	Output (m^3/h)	Energy class
DV-ROF-R-160	46	346	E
DV-ROF-R-180	50	360	E
DV-ROF-R-225	54	902	D
DV-ROF-R-250	55	1212	D
DV-ROF-R-315	56	1500	D
DV-ROF-R-355	65	2400	C

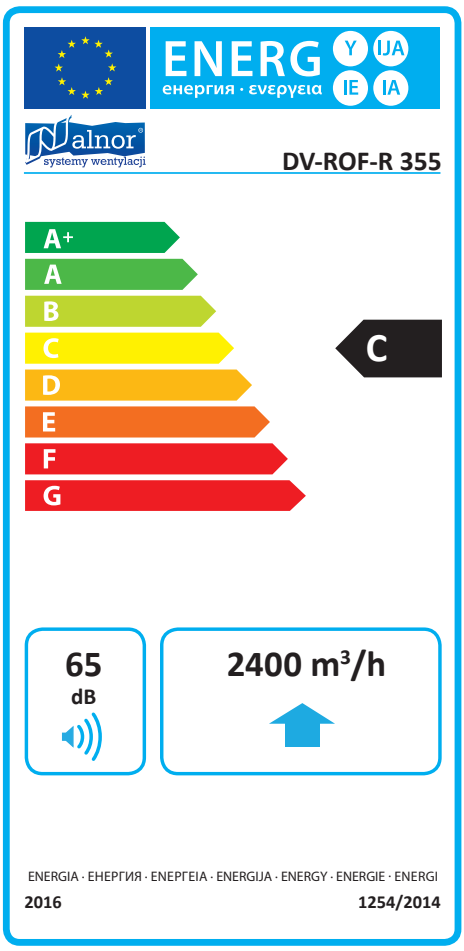

ALNOR® ventilation systems
is a legally protected trademark and technical patent. All rights reserved.

Vertical air exhaust roof fans

DV-ROF-V



Description

The DV-ROF-V roof fan with vertical air exhaust is available in two winding insulation classes: B and F. The DV-ROF-V roof fans offer a wide range of applications: industrial and general ventilation systems in production plants, hospitals, clubs, theatres, single-family houses, catering facilities, office buildings, etc. The air exhaust roof fans are designed for installation on sound-insulating fan roof bases.

Material:
- housing: galvanized steel sheet
- rotor: galvanized steel sheet

Insulation class: B or F
Protection rating: IPX4

Product code example
Product code: **DV-ROF-V - aaa**

type
ØA

Given the current EU Ecodesign of Energy Related Products Directive, the technical parameters of the fans may vary. See the specifications on the nameplate.

Dimensions

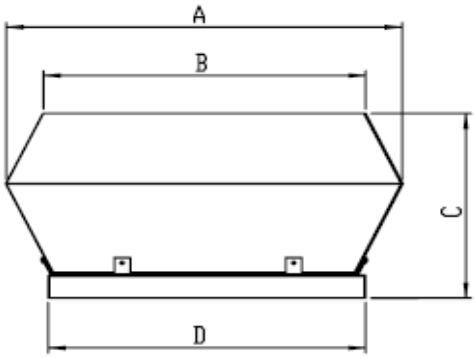

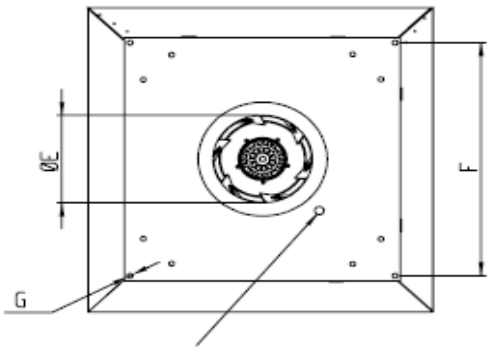

Type	A [mm]	B [mm]	C [mm]	D [mm]	ØE [mm]	F [mm]	G [mm]
DV-ROF-V-225	350	295	190	335	146	245	10
DV-ROF-V-315	552	450	330	505	185	450	10
DV-ROF-V-355	745	607	385	595	234	450	10
DV-ROF-V-400	745	607	385	595	270	450	10
DV-ROF-V-450	900	742	512	665	282	630	10
DV-ROF-V-500	900	742	512	665	320	630	12

ALNOR® ventilation systems
is a legally protected trademark and technical patent. All rights reserved.

Vertical air exhaust roof fans

DV-ROF-V

Technical specifications

Type	Voltage (V)	Frequency (Hz)	Power (W)	Current (A)	Capacitor (µf)	Speed (rpm)	Air flow rate (m³/h)	Noise level (dB(A))	Temp. range [°C]	Weight (kg)
DV-ROF-V-225	230	50	130	0.6	5	2640	850	40	-20 +50	7
DV-ROF-V-315	230	50	180	0.5	4	1430	1550	54	-20 +50	22
DV-ROF-V-355	230	50	220	1.1	6	1400	2400	56	-20 +50	34
DV-ROF-V-400	230	50	360	1.5	12	1420	3500	59	-20 +50	39
DV-ROF-V-450	230	50	620	2.2	18	1410	5000	60	-20 +50	51
DV-ROF-V-500	400	50	950	2.4	-	1400	7550	62	-20 +50	60

Charts

DV-ROF-V fan flow characteristics

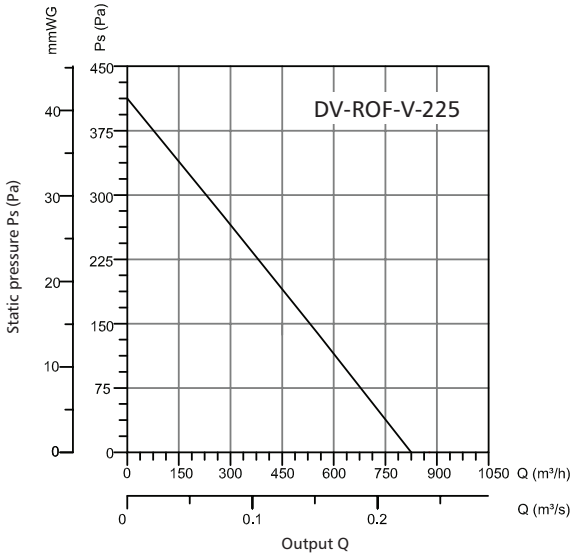

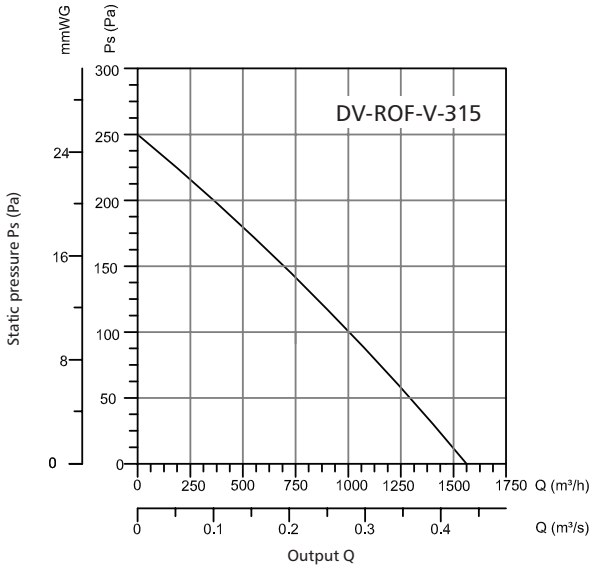

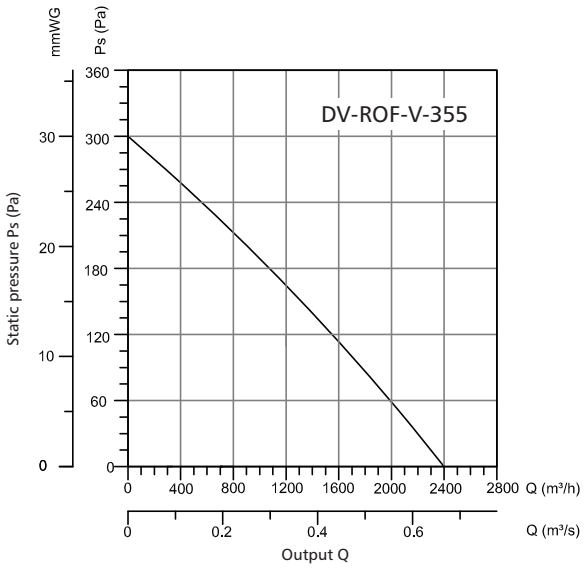

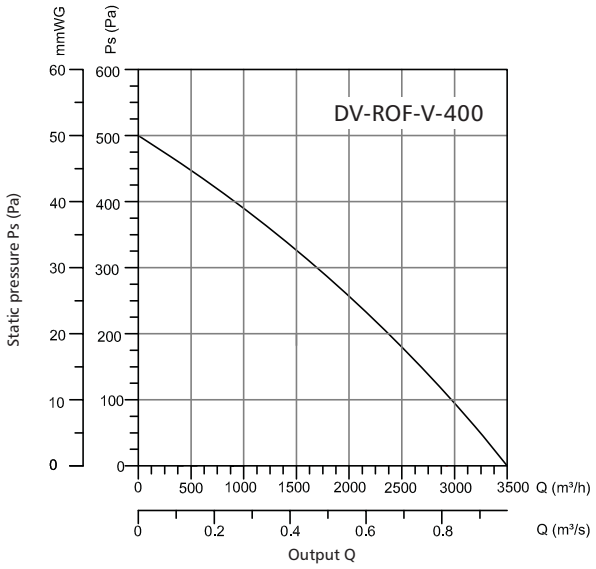

ALNOR® ventilation systems
is a legally protected trademark and technical patent. All rights reserved.

DV-ROF-V

Charts

DV-ROF-V fan flow characteristics

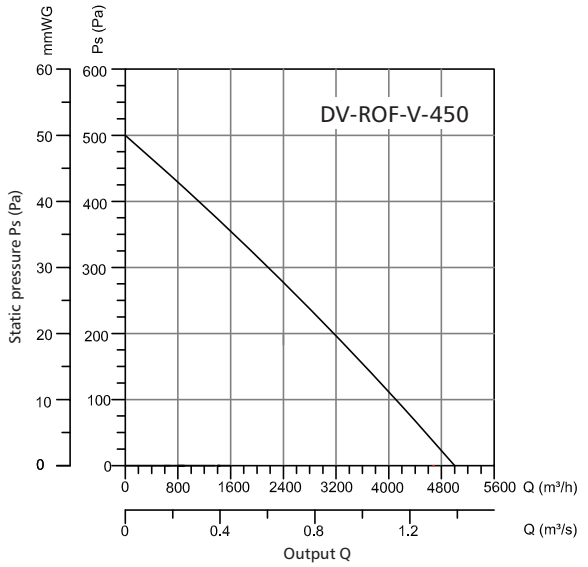

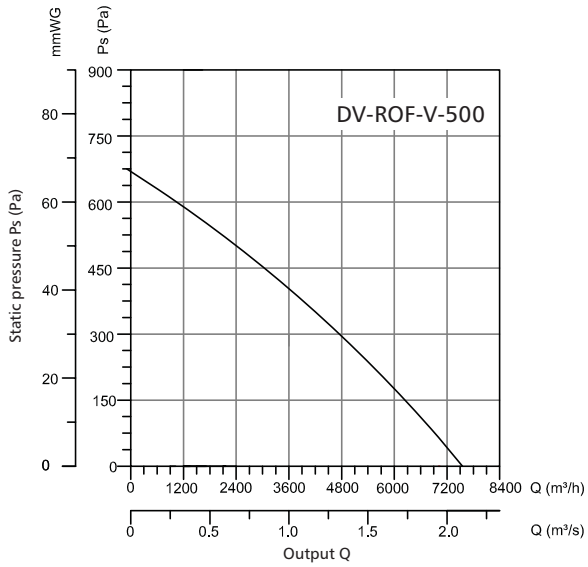

Energy class

Model	Noise level (dB)	Output (m^3/h)	Energy class
DV-ROF-V-225	40	850	F
DV-ROF-V-315	54	1550	E
DV-ROF-V-355	56	2400	E
DV-ROF-V-400	59	3500	D
DV-ROF-V-450	60	5000	E
DV-ROF-V-500	62	7550	E

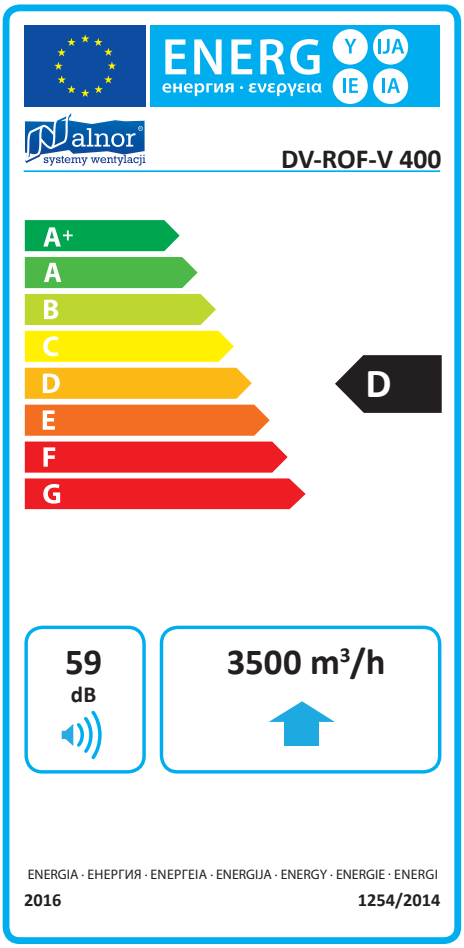

ALNOR® ventilation systems
is a legally protected trademark and technical patent. All rights reserved.

High-temperature roof exhaust fans

DV-ROF-RHT



Dimensions

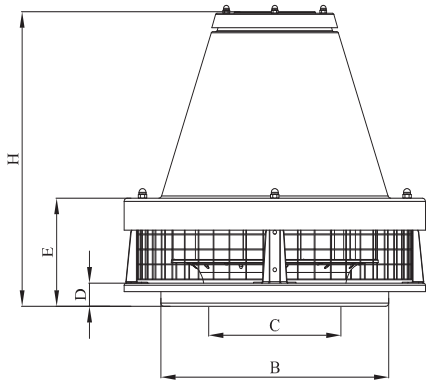

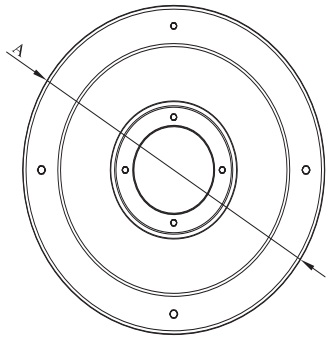

Type	A [mm]	B [mm]	C [mm]	D [mm]	E [mm]	H [mm]
DV-ROF-RHT-315	350	295	190	335	146	245

Description

The DV-ROF-RHT roof fans with horizontal air exhaust are designed for ventilation systems in housing, commercial and industrial projects which require removal of hot air up to +120°C IN TEMPERATURE.

Material:
- housing: electrostatic-coated iron sheet
- rotor: galvanized steel sheet

Insulation class: F
Protection rating: IPX4

Product code example
Product code: **DV-ROF-RHT - 315**

type
ØA

**Given the current EU Ecodesign of Energy Related Products Directive, the technical parameters of the fans may vary. See the specifications on the nameplate.*

Charts

DV-ROF-RHT fan flow characteristics

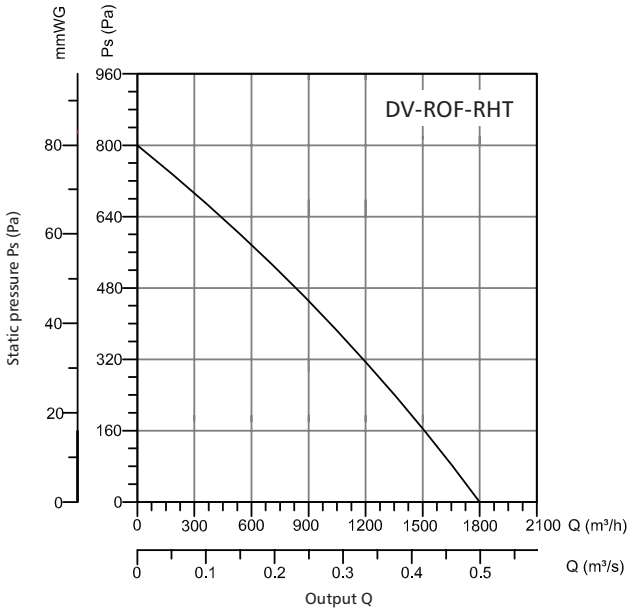

ALNOR® ventilation systems
is a legally protected trademark and technical patent. All rights reserved.

High-temperature roof exhaust fans

DV-ROF-RHT

Technical specifications

Type	Voltage (V)	Frequency (Hz)	Power (W)	Current (A)	Capacitor (µf)	Speed (rpm)	Air flow rate (m^3/h)	Noise level (dB(A))	Max. air flow temp [°C]	Weight (kg)
DV-ROF-RHT-315	220	50	250	1,2	8	2900	1800	60	120	11.30

Energy class

Model	Noise level (dB)	Output (m^3/h)	Energy class
DV-ROF-RHT-315	60	1800	B

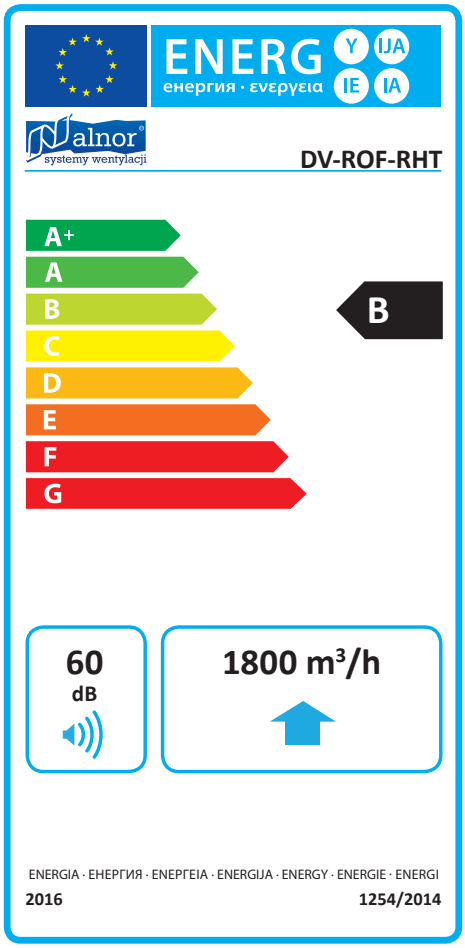

ALNOR® ventilation systems
is a legally protected trademark and technical patent. All rights reserved.

Fan speed controller

DV-REG-L-1/DV-REG-L-2,5



Dimensions

On-surface mounting

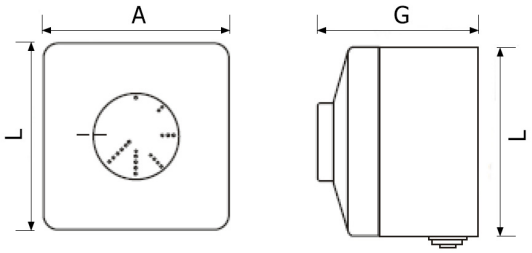

L [mm]	A [mm]	G [mm]
82	82	60

Flush mounting

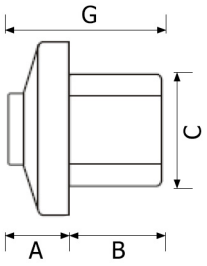

A [mm]	B [mm]	C [mm]	G [mm]
23	32	52x52	56

Description

The DV-REG-L electronic speed controllers are designed for adjusting the operating speed in single-phase fan motors. They can only be wired to fans driven by single-phase voltage-controlled speed motors. **A single DV-REG-L speed control can manage several motors** up to the current rating of the device. **The product cannot be wired to motors with external overtemperature protection.**

Mounting: On-surface or flush mounted.
Control principle: pot-meter
Infinitely variable speed control
Pot-meter-integrated ON/OFF switch
Minimum speed adjustable via an internal control unit.
Control: S — soft start, min. to max. H — hard start, max. to min.

Product code example
Product code: **DV-REG-L - aaa**

type
load

Wiring connection diagram

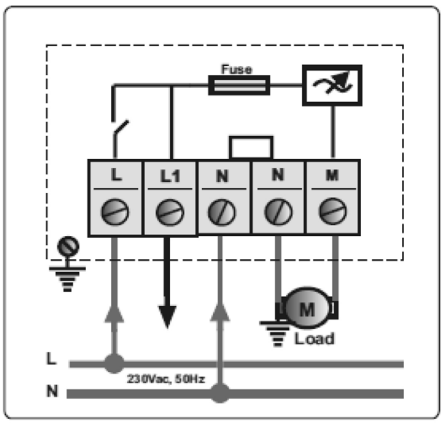

Technical specifications

Model	Voltage (V)	Rated current (A)	Weight (kg)
DV-REG-L-1	230	1	0.32
DV-REG-L-2,5	230	2.5	0.32

ALNOR® ventilation systems
is a legally protected trademark and technical patent. All rights reserved.

Speed controller

DV-REG-2/DV-REG-5



Description

The DV-REG speed controller is a straightforward solution for adjusting the actual fan speed.

Product code example

Product code: **DV-REG** **aaa**

type

load

Dimensions

Height: 116 mm
Width: 114 mm
Thickness: 50 mm

Technical specifications

Voltage: 230V
Frequency: 50-60 Hz
Current: 2 A or 5 A

Wiring connection diagram

DV-REG-2

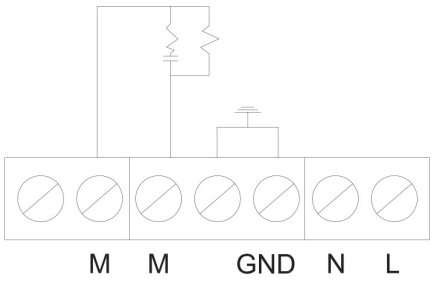

DV-REG-5

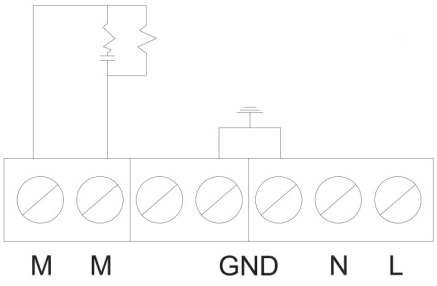

ALNOR® ventilation systems
is a legally protected trademark and technical patent. All rights reserved.

Insulated roof fan base

PDI-BRF/PDI-BRF-45/PDI-S-BRF



Description

The roof fan base fits the BRF/DV-ROF-R fans which are available in two insulation classes: B and F.
If a fan is mounted directly on the base, use the USZ gasket to isolate the mating surfaces of these two products.
The roof fan bases are available with a slope from 1 to 60 degrees.
The roof fan base is insulated with 30 mm or 50 mm thick mineral wool (depending on the product size).
The standard height available for the PDI-BRF-...- roof fan bases is 500 mm; the PDI-BRF-S-...- roof fan bases are 100 mm high.

Product code example

Product code: **PDI-BRF - aaa -** α

type
Ød
α°

Dimensions

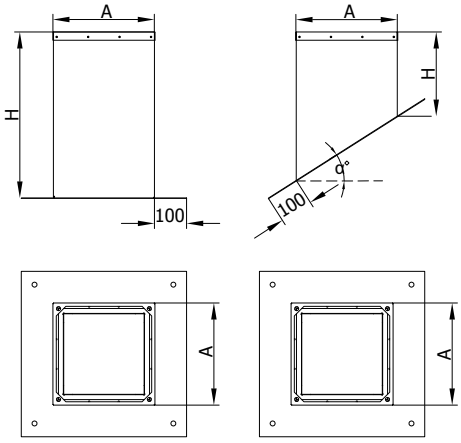

Type	A (mm)	Insulation (mm)	H (mm)	α (°)
PDI-BRF-160	226	30	500	
PDI-BRF-160-45	226	30	500	1-60
PDI-BRF-180	226	30	500	
PDI-BRF-180-45	226	30	500	1-60
PDI-BRF-225	308	30	500	
PDI-BRF-225-45	308	30	500	1-60
PDI-BRF-250	342	30	500	
PDI-BRF-250-45	342	30	500	1-60
PDI-BRF-315	424	50	500	
PDI-BRF-315-45	424	50	500	1-60
PDI-BRF-355	566	50	500	
PDI-BRF-355-45	566	50	500	1-60
PDI-BRF-400	565	50	500	
PDI-BRF-400-45	565	50	500	1-60
PDI-BRF-450	633	50	500	
PDI-BRF-450-45	633	50	500	1-60
PDI-BRF-500	769	50	500	
PDI-BRF-500-45	769	50	500	1-60
PDI-BRF-560	769	50	500	
PDI-BRF-560-45	769	50	500	1-60

ALNOR® ventilation systems
is a legally protected trademark and technical patent. All rights reserved.

Insulated roof fan base

PDI-BRF/PDI-BRF-45/PDI-S-BRF

Dimensions

Type	A (mm)	Insulation (mm)	H (mm)	α (°)
PDI-S-BRF-160	226	30	100	
PDI- S-BRF-160-45	226	30	100	15-60
PDI-S-BRF-180	226	30	100	
PDI-S-BRF-180-45	226	30	100	15-60
PDI-S-BRF-225	308	30	100	
PDI-S-BRF-225-45	308	30	100	15-60
PDI-S-BRF-250	342	30	100	
PDI-S-BRF-250-45	342	30	100	15-60
PDI-S-BRF-315	424	50	100	
PDI-S-BRF-315-45	424	50	100	15-60
PDI-S-BRF-355	566	50	100	
PDI-S-BRF-355-45	566	50	100	15-60
PDI-S-BRF-400	565	50	100	
PDI-S-BRF-400-45	565	50	100	15-60
PDI-S-BRF-450	633	50	100	
PDI-S-BRF-450-45	633	50	100	15-60
PDI-S-BRF-500	769	50	100	
PDI-S-BRF-500-45	769	50	100	15-60
PDI-S-BRF-560	769	50	100	
PDI-S-BRF-560-45	769	50	100	15-60

ALNOR® ventilation systems
is a legally protected trademark and technical patent. All rights reserved.

Fan roof base mounting plate

PDI-BRF-PLATE

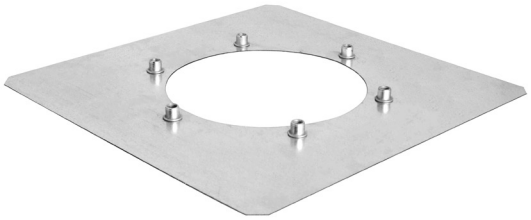

Description

Mounting plates are installed underneath PDI-BRF/PDI-S-BRF roof fan bases for extra thermal and sound insulation.
The mounting plate is fastened with the WGO self-drilling screws. The joint between the roof fan base and the plate must be sealed with the SIL-DEK-310 roofwork sealant.
The rivet nuts match the FLS steel flange size.

Product code example

Product code: **PDI-BRF-PLATE aaa**

type
ød

Dimensions

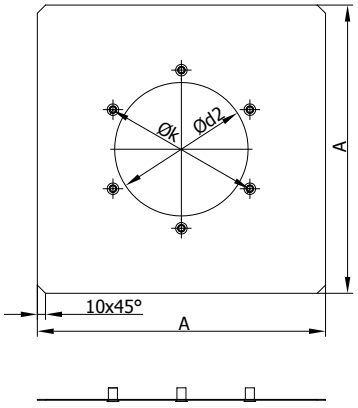

Type	A (mm)	FLS flange to match	$ød_2$	øk
PDI-BRF-PLATE-160	225	FLS-125	127	157
PDI-BRF-PLATE-180	225	FLS-125	127	157
PDI-BRF-PLATE-225	307	FLS-160	162	192
PDI-BRF-PLATE-250	341	FLS-200	203	233
PDI-BRF-PLATE-315	423	FLS-250	203	283
PDI-BRF-PLATE-355	565	FLS-355	358	392
PDI-BRF-PLATE-400	564	FLS-355	358	392
PDI-BRF-PLATE-450	632	FLS-450	454	488
PDI-BRF-PLATE-500	768	FLS-500	504	538
PDI-BRF-PLATE-560	768	FLS-560	564	600

Installation method

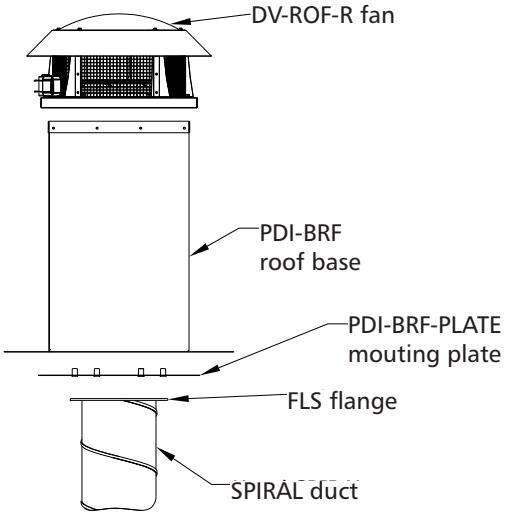

ALNOR® ventilation systems
is a legally protected trademark and technical patent. All rights reserved.

SPIRAL duct spigot plate for roof fan bases

PDI-BRF-KILL/PDI-BRF-KILL-45



Dimensions

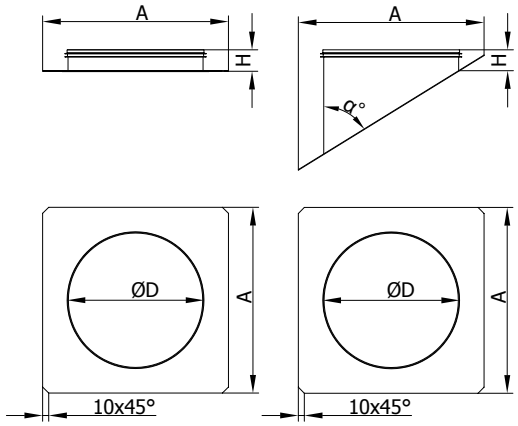

Type	ØD	A [mm]	H [mm	α [°]
PDI-BRF-KILL-160	160	225	36	
PDI-BRF-KILL-160-45	160	225	36	1-60
PDI-BRF-KILL-180	160	307	36	
PDI-BRF-KILL-180-45	160	307	36	1-60
PDI-BRF-KILL-225	250	308	36	
PDI-BRF-KILL-225-45	250	308	36	1-60
PDI-BRF-KILL-250	250	341	36	
PDI-BRF-KILL-250-45	250	341	36	1-60
PDI-BRF-KILL-315	315	423	36	
PDI-BRF-KILL-315-45	315	423	36	1-60
PDI-BRF-KILL-355	355	565	55	
PDI-BRF-KILL-355-45	355	565	55	1-60
PDI-BRF-KILL-400	400	564	55	
PDI-BRF-KILL-400-45	400	564	55	1-60
PDI-BRF-KILL-450	450	632	75	
PDI-BRF-KILL-450-45	450	632	75	1-60
PDI-BRF-KILL-500	500	768	75	
PDI-BRF-KILL-500-45	500	768	75	1-60
PDI-BRF-KILL-560	560	768	75	
PDI-BRF-KILL-560-45	560	768	75	1-60

Description

Spigot plates are installed underneath PDI-BRF/PDI-S-BRF roof fan bases for extra thermal and sound insulation.
The spigot plate is fastened with the WGO self-drilling screws. The joint between the roof fan base and the plate must be sealed with the SIL-DEK-310 roofwork sealant.
The products include straight spigot plates with the ILSL or ILSVL connectors at 1 to 60 degrees relative to the roof fan base. The product fits the SPIRAL ducts.

Product code example

Product code: **PDI-BRF-KILL - aaa - α**

type
Ød
α°

Installation method

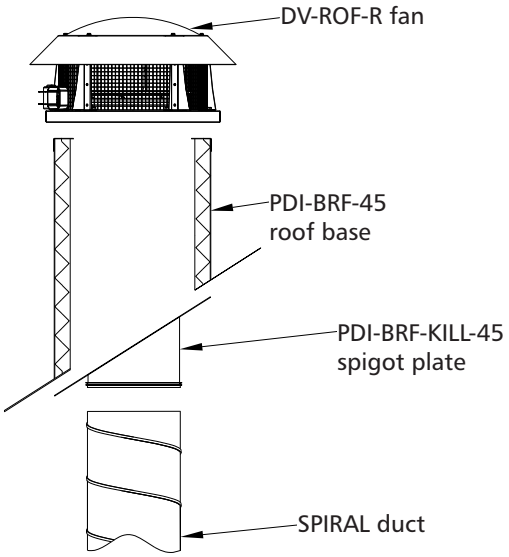

ALNOR® ventilation systems
is a legally protected trademark and technical patent. All rights reserved.

Roof fan to SPIRAL duct adapter spigot plate

PDI-BRF-KILL-UP



Description

This product can only be installed on top of a roof fan base, underneath a roof fan. The joint between the adapter spigot plate and the roof fan base must be sealed with the SIL-DEK-310 roofwork sealant. The USZ gasket must be installed at the joint between the roof fan and the adapter spigot plate. The adapter spigot plate is a thermal insulating piece only.

Product code example

Product code: **PDI-BRF-KILL-UP - aaa**

type
ød

Dimensions

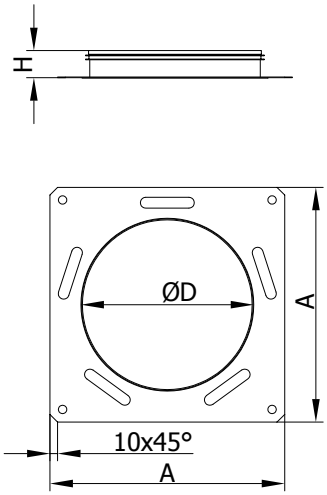

Type	ØD	A (mm)	H (mm)
PDI-BRF-KILL-UP-160	160	225	36
PDI-BRF-KILL-UP-180	160	225	36
PDI-BRF-KILL-UP-225	250	307	36
PDI-BRF-KILL-UP-250	250	341	36
PDI-BRF-KILL-UP-315	315	423	36
PDI-BRF-KILL-UP-355	355	565	55
PDI-BRF-KILL-UP-400	400	564	55
PDI-BRF-KILL-UP-450	450	632	75
PDI-BRF-KILL-UP-500	500	768	75
PDI-BRF-KILL-UP-560	560	768	75

Installation method

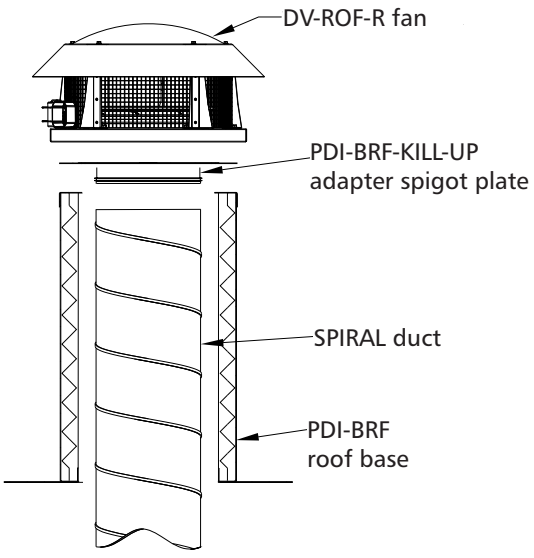

ALNOR® ventilation systems
is a legally protected trademark and technical patent. All rights reserved.

Insulated roof fan base

PDI-BRV/PDI-BRV-45/PDI-S-BRV



Description

The roof fan base fits the DV-ROF-V fans which are available in two insulation classes: B and F.
If a fan is mounted directly on the base, use the USZ gasket to isolate the mating surfaces of these two products.
The roof fan bases are available with a slope from 1 to 60 degrees.
The roof fan base is insulated with 30 mm or 50 mm thick mineral wool (depending on the product size).
The standard height available for the PDI-BRV-...- roof fan bases is 500 mm; the PDI-BRV-S-...- roof fan bases are 100 mm high.

Product code example

Product code: **PDI-BRV - aaa - α**

type
ød
α°

Dimensions

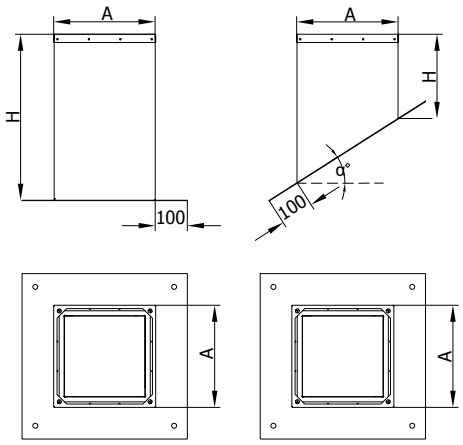

Type	A (mm)	Insulation (mm)	H (mm)	α (°)
PDI-BRV-225	308	30	500	
PDI-BRV-225-45	308	30	500	1-60
PDI-BRV-315	474	50	500	
PDI-BRV-315-45	474	50	500	1-60
PDI-BRV-355	560	50	500	
PDI-BRV-355-45	560	50	500	1-60
PDI-BRV-400	565	50	500	
PDI-BRV-400-45	565	50	500	1-60
PDI-BRV-450	630	50	500	
PDI-BRV-450-45	630	50	500	1-60
PDI-BRV-500	630	50	500	
PDI-BRV-500-45	630	50	500	1-60
PDI-S-BRV-225	308	30	100	
PDI-S-BRV-225-45	308	30	100	1-60
PDI-S-BRV-315	474	50	100	
PDI-S-BRV-315-45	474	50	100	1-60
PDI-S-BRV-355	560	50	100	
PDI-S-BRV-355-45	560	50	100	1-60
PDI-S-BRV-400	565	50	100	
PDI-S-BRV-400-45	565	50	100	1-60
PDI-S-BRV-450	630	50	100	
PDI-S-BRV-450-45	630	50	100	1-60
PDI-S-BRV-500	630	50	100	
PDI-S-BRV-500-45	630	50	100	1-60

ALNOR® ventilation systems
is a legally protected trademark and technical patent. All rights reserved.

Fan roof base mounting plate

PDI-BRV-PLATE

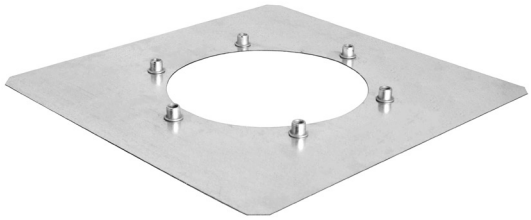

Description

Mounting plates are installed underneath PDI-BRV/PDI-S-BRV roof fan bases for extra thermal and sound insulation.
The spigot plate is fastened with the WGO self-drilling screws.
The joint between the roof fan base and the plate must be sealed with the SIL-DEK-310 roofwork sealant.
The rivet nuts match the FLS steel flange size.

Product code example
Product code: **PDI-BRV-PLATE - aaa**

type
ød

Dimensions

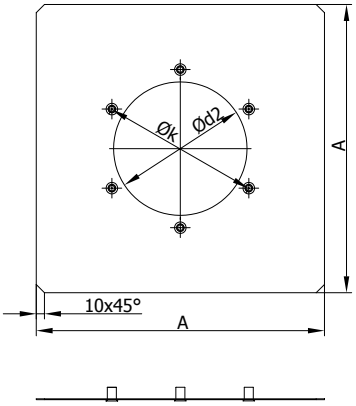

Type	*A (mm)*	*FLS flange to match*	$ød_2$	øk
PDI-BRV-PLATE-225	307	FLS-160	162	192
PDI-BRV-PLATE-315	473	FLS-250	25 3	283
PDI-BRV-PLATE-355	559	FLS-355	358	392
PDI-BRV-PLATE-400	564	FLS-355	358	392
PDI-BRV-PLATE-450	629	FLS-450	454	488
PDI-BRV-PLATE-500	629	FLS-500	504	538

Installation method

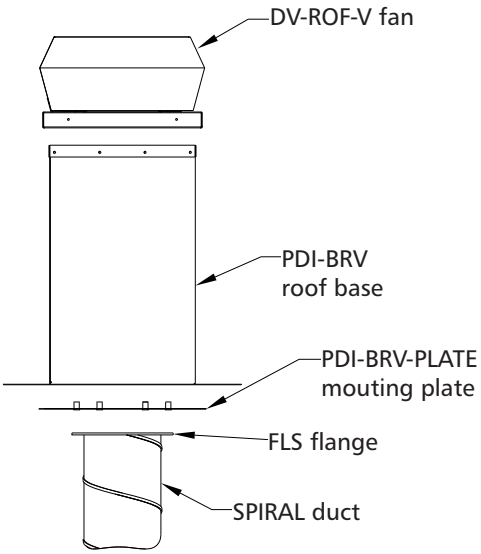

ALNOR® ventilation systems
is a legally protected trademark and technical patent. All rights reserved.

SPIRAL duct spigot plate for roof fan bases

PDI-BRV-KILL/PDI-BRV-KILL-45



Description

Spigot plates are installed underneath PDI-BRV/PDI-S-BRV roof fan bases for extra thermal and sound insulation.
The spigot plate is fastened with the WGO self-drilling screws. The joint between the roof fan base and the plate must be sealed with the SIL-DEK-310 roofwork sealant. The products include straight spigot plates with the ILSL or ILSVL connectors at 1 to 60 degrees relative to the roof fan base. The product fits the SPIRAL ducts.

Product code example
Product code: **PDI-BRV-KILL - aaa -** α

type
ød
α°

Dimensions

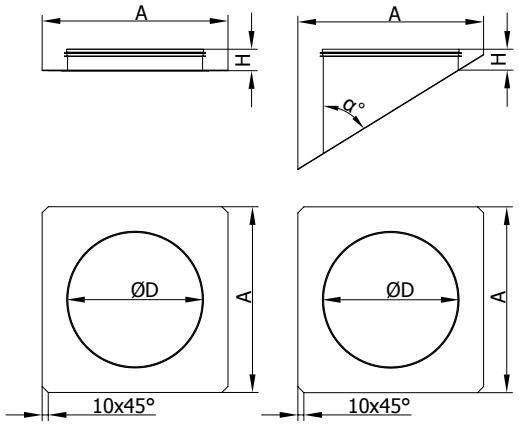

Type	ØD	A (mm)	H (mm)	angle (°)
PDI-BRV-KILL-225	250	307	36	
PDI-BRV-KILL-225-45	250	307	36	1-60
PDI-BRV-KILL-315	315	473	36	
PDI-BRV-KILL-315-45	315	473	36	1-60
PDI-BRV-KILL-355	355	559	55	
PDI-BRV-KILL-355-45	355	559	55	1-60
PDI-BRV-KILL-400	400	564	55	
PDI-BRV-KILL-400-45	400	564	55	1-60
PDI-BRV-KILL-450	450	629	75	
PDI-BRV-KILL-450-45	450	629	75	1-60
PDI-BRV-KILL-500	500	629	75	
PDI-BRV-KILL-500-45	500	629	75	1-60

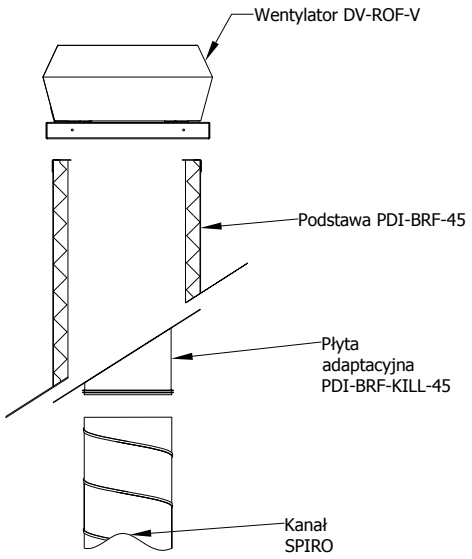

ALNOR® ventilation systems
is a legally protected trademark and technical patent. All rights reserved.

Roof fan to SPIRAL duct adapter spigot plate

PDI-BRV-KILL-UP



Description

This product can only be installed on top of a roof fan base, underneath a roof fan. The joint between the adapter spigot plate and the roof fan base must be sealed with the SIL-DEK-310 roofwork sealant. The USZ gasket must be installed at the joint between the roof fan and the adapter spigot plate. The adapter spigot plate is a thermal insulating piece only. The products include straight spigot plates with ILSL connectors.

Product code example

Product code: **PDI-BRV-KILL-UP - aaa**

type
ød

Dimensions

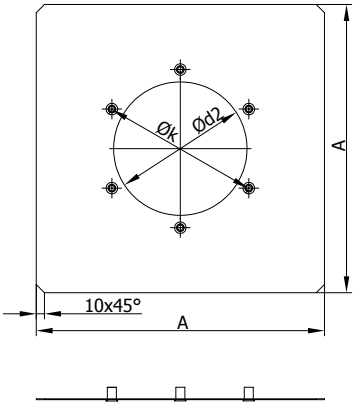

Type	ØD	A (mm)	H (mm)
PDI-BRV-KILL-UP-225	250	307	36
PDI-BRV-KILL-UP-315	315	473	36
PDI-BRV-KILL-UP-355	355	559	55
PDI-BRV-KILL-UP-400	400	564	55
PDI-BRV-KILL-UP-450	450	642	75
PDI-BRV-KILL-UP-500	500	642	75

Installation method

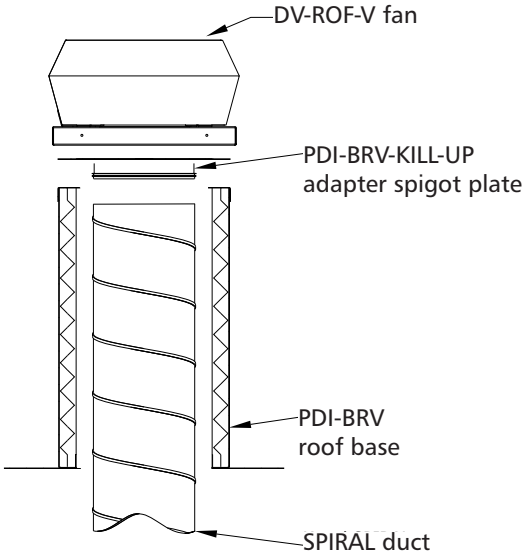

ALNOR® ventilation systems
is a legally protected trademark and technical patent. All rights reserved.

Roof fan base

PD-RHT-315/PDI-RHT-315



Description

This base is designed for the DV-ROF-RHT-315 roof fan which is available with class F winding insulation.

The roof fan base is available with a slope from

1 to 60 degrees. The roof fan base lined with 50 mm thick mineral wool. The insulation also acts as a silencer made from mineral wool in lining and a perforated SPIRAL duct. The fan should be attached with self-drilling screws no longer than 20 mm. The joint between the roof fan base and the fan must be sealed with caulk which resists temperatures up to 120 °C. The standard overall height of the roof fan base is 500 mm.

Available materials — Product code examples

PD-RHT-315 — roof fan base with male connector
PD-RHT-315-F — roof fan base with female connector
PD-RHT-315-45 — sloping roof fan base with male connector
PD-RHT-315-45-F — sloping roof fan base with female connector
PDI-RHT-315-200 — insulated roof fan base with male connector for Ø200 ducts
PDI-RHT-315-200-L — insulated roof fan base with male connector and gasket for Ø200 ducts
PDI-RHT-315-200-F — insulated roof fan base with female connector for Ø200 ducts
PDI-RHT-315-200-45 — insulated roof fan base with male connector for Ø200 ducts
PDI-RHT-315-200-45-L — insulated sloping roof fan base with male connector and gasket for Ø200 ducts
PDI-RHT-315-200-45-F — insulated roof fan base with female connector for Ø200 ducts

Product code example

Product code: **PDI-RHT-315-200-45-F**

type
insulation
Ø
α°
branch port

Dimensions

PD-RHT-315

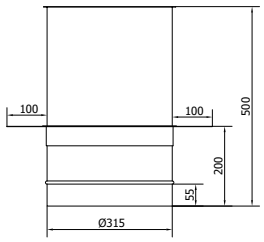

PD-RHT-315-45

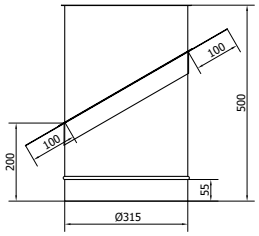

PDI-RHT-315-200

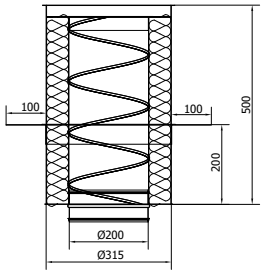

PDI-RHT-315-200-45

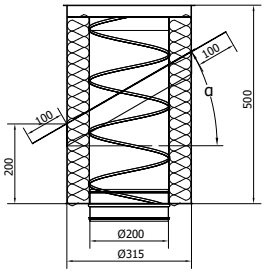

Installation method

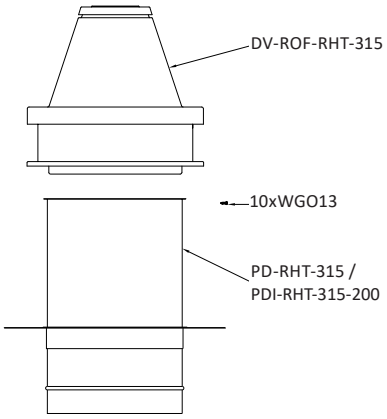

ALNOR® ventilation systems
is a legally protected trademark and technical patent. All rights reserved.

Belimo actuators for ventilation dampers

BELIMO



Description

Belimo actuators are designed as drives for single-blade round dampers and multi-blade square dampers.

Product code example

Product code: **LMC - 24**

type

voltage

Dimensions

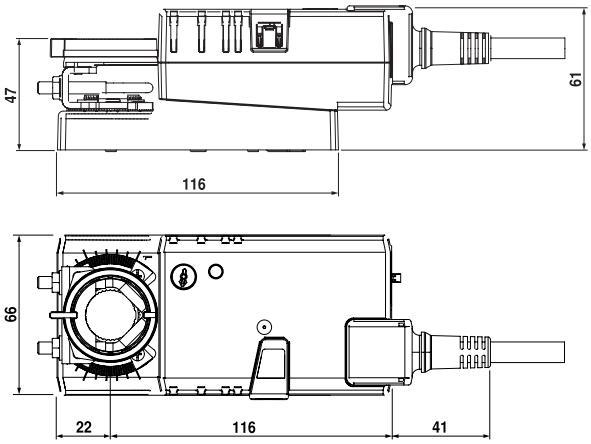

ALNOR® ventilation systems
is a legally protected trademark and technical patent. All rights reserved.

CM24-L/CM230-L

Technical specifications

Open/close control / 3-position control

Open/close control / 3-position control

Note:
Connected via a 24 V SELV transformer

The product can be connected in parallel to downstream actuators. Check the maximum power consumption limit.

AC 24V
DC 24V

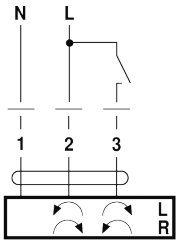

AC 24V
DC 24V

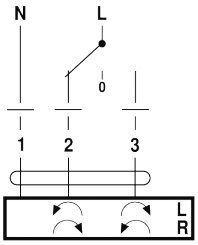

AC 230V

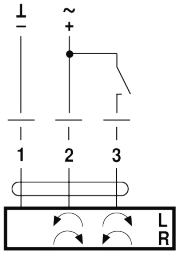

AC 230V

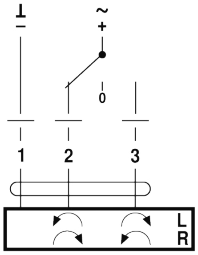

	CM24-L	CM230-L
Power supply	AC 24 V ± 20% 50/60 Hz	AC 220-240 V ±10% 50/60 Hz
	DC 24 V	± 20%
Design power	1 VA	3 VA
Power input	0.5 W	1.5 W
Connection	1 m wire with 3x0.75 mm² cores	1 m wire with 3x0.75 mm² cores
Sense of rotation	CCW or CW, depending on the version	CCW or CW, depending on the version
Torque	min. 2 Nm (at rated voltage)	min. 2 Nm (at rated voltage)
Angle of rotation	Limited by stops	Limited by stops
Turning time	75 s	75 s
Sound level	max. 35 dB (A)	max. 35 dB (A)
Position indicator	mechanical	mechanical
Protection class	III (SELV)	II
Protection rating	IP66	IP66
Ambient temperature	-30 to +50˚C	-30 to +50˚C
Storage temperature	-40 to +80˚C	-40 to +80˚C
Max. humidity	95% RH, w/o condensation	95% RH, w/o condensation
EMC emissions	CE, per 2004/108/EC	CE, per 2004/108/EC
Maintenance	maintenance-free	maintenance-free

ALNOR® ventilation systems
is a legally protected trademark and technical patent. All rights reserved.

Ventilation damper actuators

LMC24A/LMC230A

Technical specifications

Note:
Connected via
a 24 V SELV transformer

The mains isolating switch for the actuator should be a breaker with a min. contact gap of 3 mm (at break).

The product can be connected in parallel to downstream actuators. Check the maximum power consumption limit.

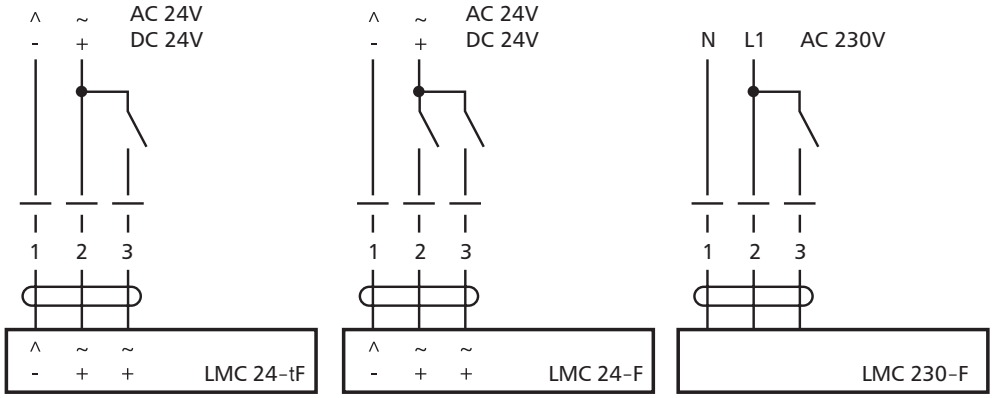

	LMC24A	LMC230A
Power supply	AC 24 V ± 20% 50/60 Hz	AC 220-240 V ±10% 50/60 Hz
	DC 24 V	± 20%
Design power	3 VA	15 VA
Power input	2 W	1.5 W
Connection	1 m wire with 3x0.75 mm² cores	1 m wire with 3x0.75 mm² cores
Sense of rotation	CCW / CW, selectable	CCW / CW, selectable
Torque	min. 3 Nm (at rated voltage)	min. 3 Nm (at rated voltage)
Angle of rotation	max. 95° (0 to 100%, restr.)	max. 95° (0 to 100%, restr.)
Turning time	(25–35) s (0 to 3 Nm)	(25–35) s (0 to 3 Nm)
Sound level	max. 45 dB (A)	max. 45 dB (A)
Position indicator	mechanical	mechanical
Protection class	III (SELV)	II
Protection rating	IP54 (with the cable downward)	IP54 (with the cable downward)
Ambient temperature	-30 to +50°C	-30 to +50°C
Storage temperature	-40 to +80°C	-40 to +80°C
Max. humidity	acc. to D (DIN 40040)	acc. to D (DIN 40040)
EMC emissions	CE, as per 89/336/EEC and 92/31/EEC	CE, as per 89/336/EEC and 92/31/EEC
Maintenance	maintenance-free	maintenance-free

ALNOR® ventilation systems
is a legally protected trademark and technical patent. All rights reserved.

Ventilation damper actuators

LM24A/LM230A

Technical specifications

Note:
Connected via a 24 V SELV transformer.

The mains isolating switch for the actuator should be a breaker with a min. contact gap of 3 mm (at break).

The product can be connected in parallel to downstream actuators. Check the maximum power consumption limit.

Open/close control

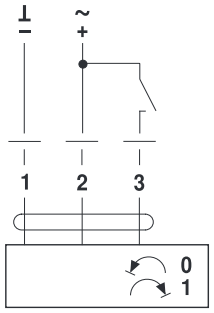

3-position control

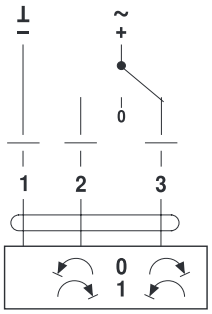

	LM24A	LM230A
Power supply	AC 24 V ± 20% 50/60 Hz DC 24 V± 10%	AC 100 to 240 V ± 10% 50/60 Hz
Design power	2.0 VA	4.0 VA
Power input		
when opening	1,0 W (at rated torque)	1.5 W
stationary	0.2 W	0.4 W
Connection	1 m wire with 3x0.75 mm² cores	1 m wire with 3x0.75 mm² cores
Sense of rotation	CCW / CW, selectable	CCW / CW, selectable
Torque	min. 5 Nm (at rated voltage)	min. 5 Nm (at rated voltage)
Angle of rotation	max. 95° (restricted with stops on both sides)	max. 95° (restricted with stops on both sides)
Turning time	150 s	150 s
Noise level	max. 35 dB(A)	max. 35 dB(A)
Position indicator	mechanical	mechanical
Protection class	III (SELV)	II (fully insulated)
Protection rating	IP 54 (in any orientation)	IP 54 (in any orientation)
Ambient temp.	-30 to +50°C	-30 to +50°C
Storage temp.	-40 to +80°C	-40 to +80°C
Ambient humidity	95% RH, w/o condensation	95% RH, w/o condensation
EMC emissions	EN 50081-1	EN 50081-1
Service life	≈60,000 cycles	≈60,000 cycles
Maintenance	maintenance-free	maintenance-free

ALNOR® ventilation systems
is a legally protected trademark and technical patent. All rights reserved.

Ventilation damper actuators

NM24A/NM230A

Technical specifications

Note:
Connected via a 24 V SELV transformer.

The mains isolating switch for the actuator should be a breaker with a min. contact gap of 3 mm (at break).

The product can be connected in parallel to downstream actuators. Check the maximum power consumption limit.

Open/close control

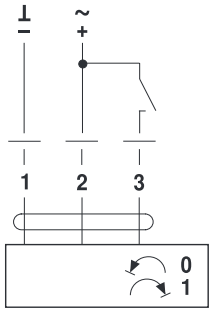

3-position control

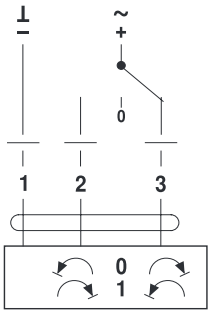

	NM24A	NM230A
Power supply	AC 24 V ± 20% 50/60 Hz	AC 220-240 V ±10% 50/60 Hz
	DC 24 V	± 20%
Design power	3 VA	15 VA
Power input	2 W	1.5 W
Connection	1 m wire with 3x0.75 mm² cores	1 m wire with 3x0.75 mm² cores
Sense of rotation	CCW / CW, selectable	CCW / CW, selectable
Torque	min. 3 Nm (at rated voltage)	min. 3 Nm (at rated voltage)
Angle of rotation	max. 95˚ (0 to 100%, restr.)	max. 95˚ (0 to 100%, restr.)
Turning time	(25–35) s (0 to 3 Nm)	(25–35) s (0 to 3 Nm)
Sound level	max. 45 dB (A)	max. 45 dB (A)
Position indicator	mechanical	mechanical
Protection class	III (SELV)	II
Protection rating	IP54 (with the cable downward)	IP54 (with the cable downward)
Ambient temperature	-30 to +50˚C	-30 to +50˚C
Storage temperature	-40 to +80˚C	-40 to +80˚C
Max. humidity	acc. to D (DIN 40040)	acc. to D (DIN 40040)
EMC emissions	CE, as per 89/336/EEC and 92/31/EEC	CE, as per 89/336/EEC and 92/31/EEC
Maintenance	maintenance-free	maintenance-free

ALNOR® ventilation systems
is a legally protected trademark and technical patent. All rights reserved.

SM24/SM230

Technical specifications

Note:
Connected via a 24 V SELV transformer.

The mains isolating switch for the actuator should be a breaker with a min. contact gap of 3 mm (at break).

The product can be connected in parallel to downstream actuators. Check the maximum power consumption limit.

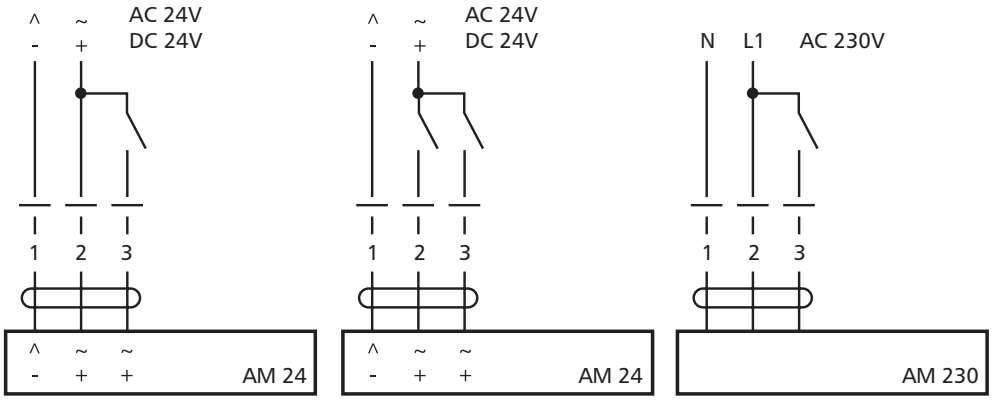

	SM24	SM230
power	AC 24 V 50/60 Hz, DC 24 V	AC 230 V 50/60 Hz
Power supply range	AC 19.2 to 28.8 V, DC 21.6 to 28.8 V	AC 198 to 264 V
Design power	4.5 VA	25 VA 50 Hz, 30 VA 60 Hz
Power input	2.5 W	3 W 50 Hz, 3.8 W 60 Hz
Connection	motor: 1 m wire with 3x0.75 mm² cores	motor: 1 m wire with 3x0.75 mm² cores
Connection terminal	SM24 1 x for the motor wiring ≈ 6 to 7 mm	SM230 1 x for the motor wiring ≈ 6 to 7 mm
Sense of rotation	CCW / CW, selectable	CCW / CW, selectable
Selection	housing button	housing button
Torque	min. 18 Nm (at rated voltage)	min. 18 Nm (at rated voltage)
Angle of rotation	max. 95° (restricted from 35 to 100%)	max. 95° (restricted from 35 to 100%)
Turning time	100 to 150 s (0 to 20 Nm)	100 to 150 s (0 to 20 Nm)
Noise level	max. 45 dB (A)	max. 45 dB (A)
Position indicator	mechanical	mechanical
Protection class	III (SELV)	II
Protection rating	IP54 (with the cable downward)	IP54 (with the cable downward)
Ambient temperature	-30 to +50°C	-30 to +50°C
EMC emissions	CE, as per 89/336/EEC and 92/31/EEC	CE, as per 89/336/EEC and 92/31/EEC
Maintenance	maintenance-free	maintenance-free

ALNOR® ventilation systems
is a legally protected trademark and technical patent. All rights reserved.

Return-spring actuator

LF24/LF230

Technical specifications

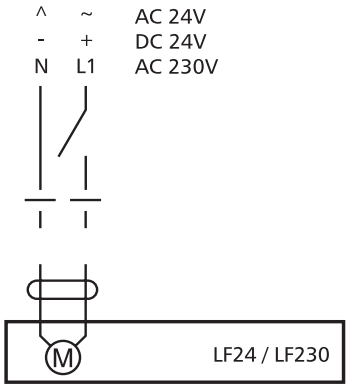

Note:
Connected via a 24 V SELV transformer.

The mains isolating switch for the actuator should be a breaker with a min. contact gap of 3 mm (at break).

The product can be connected in parallel to downstream actuators. Check the maximum power consumption limit.

	LF24	LF230
Power supply	AC 24 V 50/60 Hz, DC 24 V	AC 230 V 50/60 Hz
Power supply range	AC 19.2 to 28.8 V, DC 21.6 to 28.8V	AC 198 to 264 V
Design power	7 VA	7 VA
Power input		
when opening	5 W	5 W
open	2.5 W	3 W
Connection	1m wire with 2x0.75 mm² cores	1m wire with 2x0.75 mm² cores
Sense of rotation	CCW / CW, depends on the installation orientation	CCW / CW, depends on the installation orientation
Torque		
Motor	min. 4 Nm (at rated voltage)	min. 4 Nm (at rated voltage)
Spring	min. 4 Nm	min. 4 Nm
Angle of rotation	max. 95° (adjustable from 37 to 100% < with integrated angle limiter)	max. 95° (adjustable from 37 to 100% < with integrated angle limiter)
Turning time		
Motor	40 to 75 s (0 to 4 Nm)	40 to 75 s (0 to 4 Nm)
Spring	20 s — 20 to 50°C / max. 60 s — 30°C	20 s — 20 to 50°C / max. 60 s — 30°C
Noise level	Motor, max. 50 dB (A) / Spring ≈ 62 dB (A)	Motor, max. 50dB (A) / Spring ≈ 62 dB (A)
Service life	ca. 60,000 cycles	ca. 60,000 cycles
Position indicator	mechanical	mechanical
Protection class	III (SELV)	II
Protection rating	IP54	IP54
Ambient temperature	-30 to +50°C	-30 to +50°C
Humidity testing	acc. to EN 60335-1	acc. to EN 60335-1
EMC emissions	CE, as per 89/336/EEC and 92/31/EEC	CE, as per 89/336/EEC and 92/31/EEC
Maintenance	maintenance-free	maintenance-free

ALNOR® ventilation systems
is a legally protected trademark and technical patent. All rights reserved.

Return-spring actuator

NF24A/NF230A

Technical specifications

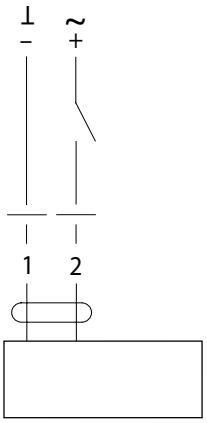

Colours of wires:
1 = black
2 = red

Note:
Connected via a 24 V SELV transformer.

The mains isolating switch for the actuator should be a breaker with a min. contact gap of 3 mm (at break).

The product can be connected in parallel to downstream actuators. Check the maximum power consumption limit.

	NF24A	NF230A
Power supply	AC 24 V 50/60 Hz, DC 24 V	AC 230 V 50/60 Hz
Power supply range	AC 19.2 to 28.8 V, DC 21.6 to 28.8V	AC 195... 264 V
Design power	8.5 VA	9.5 VA
Power input		
in opening	6 W	6 W
At rest	2.5 W	2.5 W
Connection	1m wire with 2x0.75 mm² cores	1m wire with 2x0.75 mm² cores
Sense of rotation	CCW / CW, depends on the installation orientation	CCW / CW, depends on the installation orientation
Torque		
Motor	min. 10 Nm (at rated voltage)	min. 10 Nm (at rated voltage)
Spring	min. 10 Nm	min. 10 Nm
Angle of rotation	Max. 95° adjustable starting at 33% in 2.5% steps (with mechanical end stop)	Max. 95°, can be limited with adjustable mechanical end stop
Turning time		
Motor	≤ 75 s (0 to 10 Nm)	≤ 75 s (0 to 10 Nm)
Spring	20 s @ 20 to 50˚C / max. 60 s @ 30˚C	20 s @ 20 to 50˚C / max. 60 s @ 30˚C
Noise level	Motor, max. 45 dB (A) / Spring ≈ 62 dB (A)	Motor, max. 45 dB (A) / Spring ≈ 62 dB (A)
Service life	ca. 60,000 cycles	ca. 60,000 cycles
Position indicator	mechanical	mechanical
Protection class	III (SELV)	II
Protection rating	IP54	IP54
Ambient temperature	-30 to +50˚C	-30 to +50˚C
Humidity testing	acc. to EN 60335-1	acc. to EN 60335-1
EMC Low-voltage directive	CE according to 2004/108/EC CE according to 2006/95/EC	CE according to 2004/108/EC CE according to 2006/95/EC
Maintenance	maintenance-free	maintenance-free

ALNOR® ventilation systems
is a legally protected trademark and technical patent. All rights reserved.

Napędy ze sprężyną powrotną

SF24A/SF230A

Technical specifications

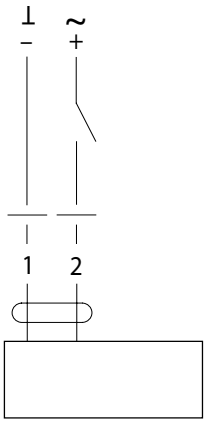

Colours of wires:
1 = black
2 = red

Note:
Connected via a 24 V SELV transformer.

The mains isolating switch for the actuator should be a breaker with a min. contact gap of 3 mm (at break).

The product can be connected in parallel to downstream actuators. Check the maximum power consumption limit.

	SF24A	SF230A
Power supply	AC 24 V ± 20% 50/60 Hz DC 24 V± 10%	AC 220 to 240 V ± 10% 50/60 Hz
Design power	7.5 VA	11 VA
Power input		
when opening	5 W (at rated torque)	6.5 W
stationary	2.5 W	2.5 W
Connection	1 m wire with 2x 0.75 mm² cores	1 m wire with 2x 0.75 mm² cores
Sense of rotation		
Spring	CCW / CW, depends on the installation orientation	CCW / CW, depends on the installation orientation
Motor	CCW / CW, selectable	CCW / CW, selectable
Torque		
Motor	min. 20 Nm (at rated voltage)	min. 20 Nm (at rated voltage)
Spring	min. 20 Nm	min. 20 Nm
Angle of rotation	max. 95° (adjustable restriction, 30°..90° with integrated angle limiter)	max. 95° (adjustable restriction, 30°..90° with integrated angle limiter)
Turning time		
Motor	≤ 75 s	≤ 75 s
Spring	≤ 20 s	≤ 20 s
Noise level	Motor, max. 45 dB(A) / Spring, max. 62 dB(A)	Motor, max. 45 dB(A) / Spring, max. 62 dB(A)
Position indicator	mechanical	mechanical
Protection class	III (SELV)	II
Protection rating	IP54 (with the cable downward)	IP54 (with the cable downward)
Ambient temp.	-30 to +50°C	-30 to +50°C
Storage temp.	-40 to +80°C	-40 to +80°C
Ambient humidity	95% RH, w/o condensation	95% RH, w/o condensation
EMC emissions	EN 50081-1	EN 50081-1
Service life	ca. 60,000 cycles	ca. 60,000 cycles
Maintenance	maintenance-free	maintenance-free

ALNOR® ventilation systems
is a legally protected trademark and technical patent. All rights reserved.

Technical specifications

Actuator type	Power supply	Recommended diameter Ød / max. surface area, m²	Torque (Nm)	Travel time (s)	Universal clamp	Mounting	Description	More data ref.	Options
CM24-L	AC/DC 24V	80-180 0,4 m²	2 Nm	75	6 - 12,7 mm	Flush	small footprint	p. <?>	F, T, SR, R, L, G
CM230-L	AC 230V	80-180 0,4 m²	2 Nm	75	6 - 12,7 mm	Flush	small footprint	p. <?>	F, T, R, L, G
LMC24A	AC/DC 24V	200-400 1 m²	5 Nm	35	6 - 20 mm	Flush	short closing time	p. <?>	F, S, SR, TP
LMC230A	AC/DC 230V	200-400 1 m²	5 Nm	35	6 - 20 mm	Flush	short closing time	p. <?>	F, S, TP
LM24A	AC/DC 24 V	200-400 1 m²	5 Nm	150	6 - 20 mm	Flush		p. <?>	S, TP, Q, F, SR
LM230A	AC/DC 230V	200-400 1 m²	5 Nm	150	6 - 20 mm	Flush		p. <?>	S, TP, Q, F
NM24A	AC/DC 24V	200-630 2 m²	10 Nm	150	8 - 26 mm	Flush		p. <?>	TP, SR, Q, F, S
NM230A	AC/DC 230V	200-630 2 m²	10 Nm	150	8 - 26 mm	Flush		p. <?>	TP, Q, F, S
SM24	AC/DC 24 V	200-630 4 m²	20 Nm	150	10 - 20 mm	Flush	high torque	p. <?>	S, TP, Q, F, SR
SM230	AC/DC 230V	200-630 4 m²	20 Nm	150	10 - 20 mm	Flush	high torque	p. <?>	S, TP, Q, F
LF24	AC/DC 24 V	80-355 0,8 m²	4 Nm	75	8 - 16 mm	Mount	w/return spring	p. <?>	S, SR, F
LF230	AC/DC 230 V	80-355 0,8 m²	4 Nm	75	8 - 16 mm	Mount	w/return spring	p. <?>	S, F
NF24A	AC/DC 24 V	200-630 2 m²	10 Nm	75	14 - 22 mm	Flush	w/return spring	p. <?>	S2, SR
NF230A	AC/DC 230 V	200-630 2 m²	10 Nm	75	14 - 22 mm	Flush	w/return spring	p. <?>	S2
SF24A	AC/DC 24 V	200-630 4 m²	20 Nm	75	14 - 22 mm	Mount	w/return spring	p. <?>	S2, SR
SF230A	AC/DC 230 V	200-630 4 m²	20 Nm	75	14 - 22 mm	Mount	w/return spring	p. <?>	S2

The standard actuator versions feature either open/close control or 3-position control (the return-spring actuators are only available with open/close control). The actuators feature a universal clamp form which can accommodate round and square shaft necks.
Optional product codes:

TP — wiring terminal plug only (no wiring included)
SR — 2 to 10 V analogue control for smooth opening and closing
T — wiring terminals only (no wiring included)
R — CW sense of rotation for CM actuators
S — integrated aux. output contact for e.g. a full damper opening feedback
S2 — two auxiliary output contacts: 1 fixed, 1 programmable. The auxiliary contacts allow feeding back the damper blade position: 10% and between 10 and 90%.
F — square shaft neck clamp only (the shaft neck size depends on the actuator size)
Q — extremely fast actuation (4 s)
G — IP66 enclosure (as per EN 60529:2003)

ALNOR® ventilation systems
is a legally protected trademark and technical patent. All rights reserved.

Ventilation damper actuator

DM-ML, DM-FL



Description

The DM-ML and DM-FL series actuators are designed as drives for single-blade round dampers and multi-blade square dampers.

Product code example

Product code: **DM-FL-05 - 230**

type

voltage

Dimensions

DM-ML-06

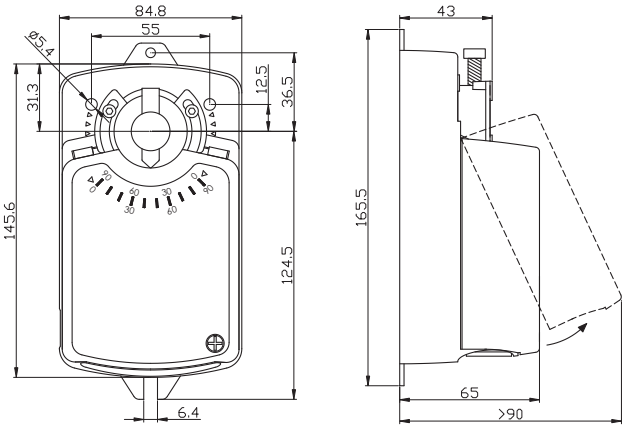

DM-ML-08

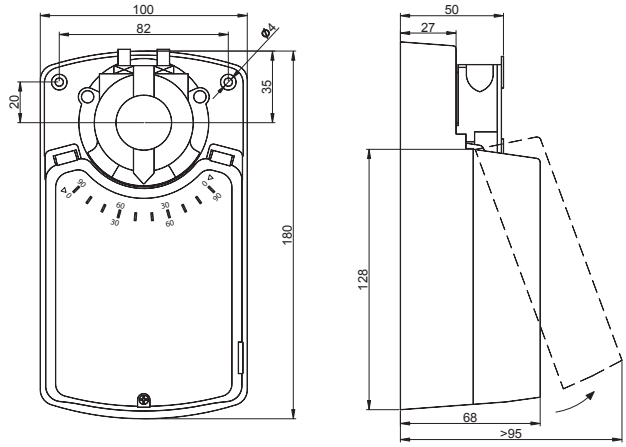

DM-FL-05

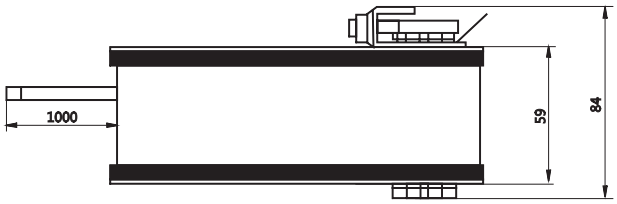

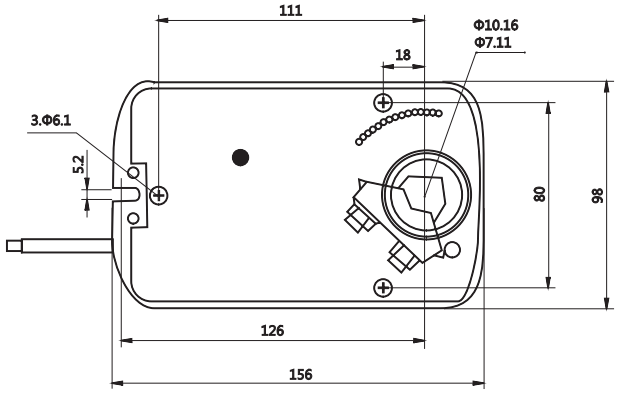

ALNOR® ventilation systems
is a legally protected trademark and technical patent. All rights reserved.

Ventilation damper actuator

DM-ML, DM-FL

Technical specifications

Type	*Power supply*	*Recommended diameter Ød / max. surface area, m²*	*Torque (Nm)*	*Travel time (s)*	*Range of motion (°)*	*Universal clamp (mm)*
DM-ML-06-24	AC/DC 24V	80 - 400 mm 1,2 m²	6	40	0 - 95	Ø 6 - 16 □ 8 - 12
DM-ML-06-24-S	AC/DC 24V	80 - 400 mm 1,2 m²	6	40	0 - 95	Ø 6 - 16 □ 8 - 12
DM-ML-06-24-RS	AC/DC 24V	80 - 400 mm 1,2 m²	6	40	0 - 95	Ø 6 - 16 □ 8 - 12
DM-ML-06-230	AC 230V	80 - 400 mm 1,2 m²	6	40	0 - 95	Ø 6 - 16 □ 8 - 12
DM-ML-06-230-S	AC 230V	80 - 400 mm 1,2 m²	6	40	0 - 95	Ø 6 - 16 □ 8 - 12
DM-ML-06-230-RS	AC 230V	80 - 400 mm 1,2 m²	6	40	0 - 95	Ø 6 - 16 □ 8 - 12
DM-ML-08-24	AC/DC 24V	200 - 630 mm 1.5 m²	8	30	0 - 95	Ø 10 - 20 □ 10 - 16
DM-ML-08-230	AC 230V	200 - 630 mm 1.5 m²	8	30	0 - 95	Ø 10 - 20 □ 10 - 16
DM-FL-05-24	AC/DC 24V	80 - 355 mm 1,0 m²	5	50 - 70	0 - 95	Ø 10 - 16 □ 7 - 11
DM-FL-05-230	AC 230V	80 - 355 mm 1,0 m²	5	50 - 70	0 - 95	Ø 10 - 16 □ 7 - 11

ALNOR® ventilation systems
is a legally protected trademark and technical patent. All rights reserved.

Ventilation damper actuators

DM-ML-06



Description

The DM-ML-06 actuator enables remote operation of a ventilation damper. The actuators with 6 Nm of torque are the most popular choice for ventilation dampers.
The torque of 6 Nm allows opening dampers with the cross-sectional surface area up to 1.2 m^2; they can be installed on ventilator dampers up to 400 mm in diameter.
The DM-ML-...-S actuators feature an auxiliary contact which, aside from accepting open and close commands, allows setting an intermediate opening position of the damper blade e.g. at 45%.
The DM-ML-...-RS actuators provide full operating control over a ventilation damper: they allow an infinitely variable control over the damper blade opening ratio.

Product code example

Product code: **DM-ML-06 - 230**

type
voltage

Dimensions

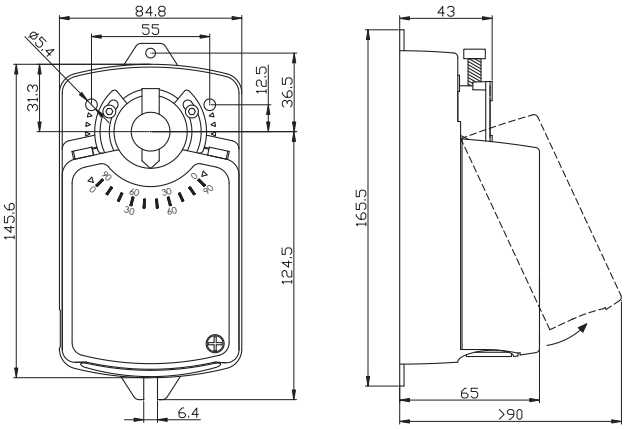

ALNOR® ventilation systems
is a legally protected trademark and technical patent. All rights reserved.

DM-ML-06

Technical specifications

DM-ML-06-24 / DM-ML-06-24-S / DM-ML-06-230 / DM-ML-06-230-S

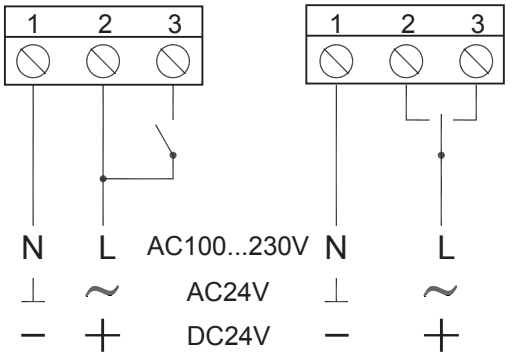

Open/close control 3-position control

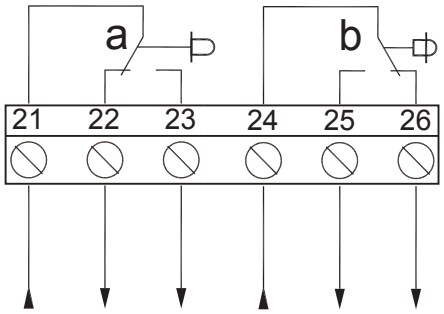

Resistive load: 3 A, 230 V
Inductive load: 1.5 A, 230 V
Actuator positions at 0˚

DM-ML-06-24-RS / DM-ML-06-230-RS

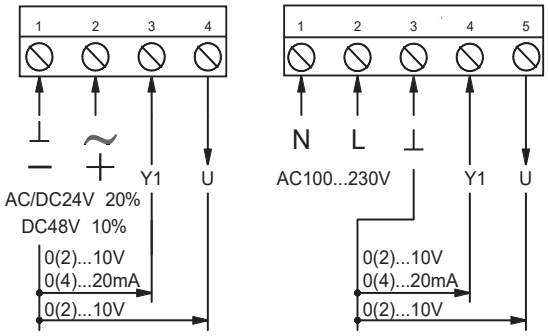

	DM-ML-06-24 / DM-ML-06-24-S DM-ML-06-24-RS	DM-ML-06-230 / DM-ML-06-230-S DM-ML-06-230-RS
Power supply	AC 24 V 50/60 Hz	AC 230 V 50/60 Hz
	DC 24 V	
Power input	2.0 W	3.2 W
Wiring size selection	4.4 VA	4.4 VA
Core size	max. 2.0 mm²	max. 2.0 mm²
Torque	6 Nm	6 Nm
Sense of rotation	selectable	selectable
Angle of rotation	0 to 90˚ (max. 95˚)	0 to 90˚ (max. 95˚)
Turning time	40 s	40 s
Sound level	45 dB (A)	45 dB (A)
Position indicator	mechanical	mechanical
Protection rating	IP44	IP44
Ambient temperature	-20 to +50˚C	-20 to +50˚C
Max. humidity	95% RH, w/o condensation, as per EN 60730-1	95% RH, w/o condensation, as per EN 60730-1
Overload protection	automatic	automatic

S — integrated aux. output contact, e.g. for full damper opening feedback
RS — 2 to 10V analogue control for smooth opening and closing

ALNOR® ventilation systems
is a legally protected trademark and technical patent. All rights reserved.

Ventilation damper actuators

DM-ML-08



Description

The DM-ML-08 actuator enables remote operation of a ventilation damper.
The DM-ML-08 actuators with a torque of 8 Nm are intended for multi-blade square dampers with a cross-sectional surface area up to 1.5m² and round ventilation dampers up to 630 mm in diameter.
These actuators are designed for high air pressure ventilation systems.
The DM-ML-08 actuators can be installed on standard DATML and DATM round ventilation dampers rated at air tightness class 4 and DASM / DASML round regulating dampers, which as a result of the integrated gaskets are fit for ventilation systems in air tightness class D as per EN 12237:2005.

Product code example

Product code: **DM-ML-08 - 230**

type
voltage

Dimensions

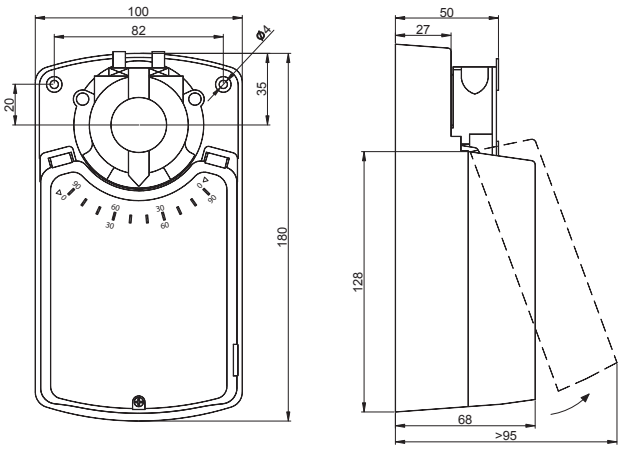

ALNOR® ventilation systems
is a legally protected trademark and technical patent. All rights reserved.

DM-ML-08

Technical specifications

DM-ML-08-24

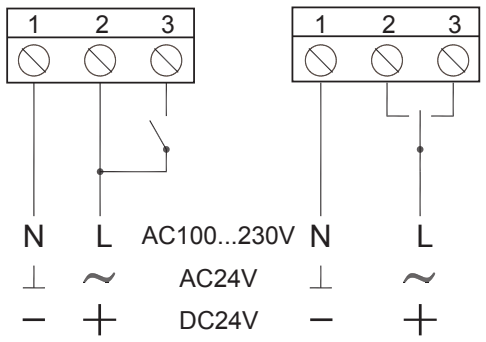

DM-ML-08-230

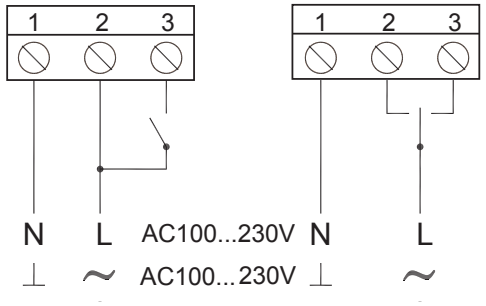

	DM-ML-08-24	DM-ML-08-230
Power supply	AC 24 V 50/60 Hz	AC 230 V 50/60 Hz
	DC 24 V	
Power input	3.5 W	4.5 W
Wiring size selection	7 VA	9 VA
Core size	max. 2.0 mm²	max. 2.0 mm²
Torque	8 Nm	8 Nm
Sense of rotation	selectable	selectable
Angle of rotation	0 to 90° (max. 95°)	0 to 90° (max. 95°)
Turning time	30 s	30 s
Sound level	45 dB (A)	45 dB (A)
Position indicator	mechanical	mechanical
Protection rating	IP44	IP44
Ambient temperature	-20 to +50°C	-20 to +50°C
Max. humidity	95% RH, w/o condensation, as per EN 60730-1	95% RH, w/o condensation, as per EN 60730-1
Overload protection	automatic reset	automatic reset

ALNOR® ventilation systems
is a legally protected trademark and technical patent. All rights reserved.

Ventilation damper actuators

DM-FL-05



Description

The DM-FL-05 24 V AC/D and 230 V actuators enable remote operation of ventilation dampers.
The DM-FL-05 actuators are intended for single-blade and multi-blade square dampers with a cross-sectional surface area up to 1.0m^2 and round ventilation dampers up to 355 mm in diameter.
The actuators are installed on dedicated actuator mounts integrated with the DATML, DASML, DATM and similar ventilation dampers from Alnor.
The DM-FL-05 actuators enable remote opening and closing of the air flow through the ventilation ducts.
The DM-FL-05 actuators have return springs.
Depending on the actuator installation method, the return spring can either open or close the damper if there is a power failure.

Product code example

Product code: **DM-FL-05 - 230**

type
voltage

Dimensions

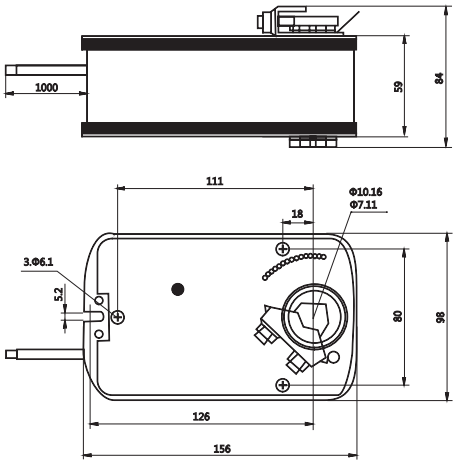

ALNOR® ventilation systems
is a legally protected trademark and technical patent. All rights reserved.

Ventilation damper actuators

DM-FL-05

Technical specifications

DM-FL-05-24

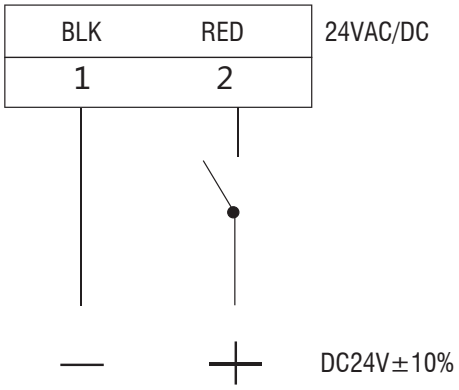

DM-FL-05-230

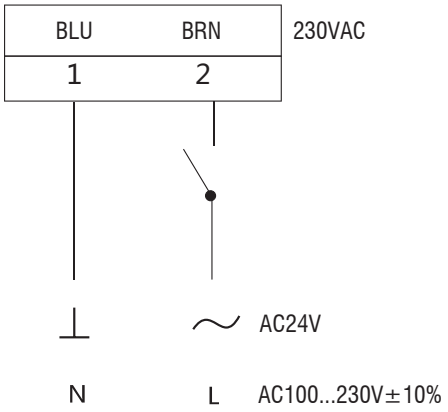

	DM-FL-05-24	DM-FL-05-230
Power supply	AC 24 V 50/60 Hz	AC 230 V 50/60 Hz
	DC 24 V	
Power input	7.2 W	4.6 W
Wiring size selection	4.4 VA	4.4 VA
Core size	max. 0.5mm^2	max. 0.5mm^2
Torque	5 Nm	5 Nm
Sense of rotation	selectable	selectable
Angle of rotation	0 to 90˚ (max. 95˚)	0 to 90˚ (max. 95˚)
Turning time	50 to 70 s	50 to 70 s
Sound level	45 dB (A)	45 dB (A)
Position indicator	mechanical	mechanical
Protection rating	IP54	IP54
Ambient temperature	-20 to + 50˚C	-20 to + 50˚C
Max. humidity	95% RH, w/o condensation, as per EN 60730-1	95% RH, w/o condensation, as per EN 60730-1
Overload protection	automatic reset	automatic reset

ALNOR® ventilation systems
is a legally protected trademark and technical patent. All rights reserved.

Air valve to fire damper coupling module

FDA-BU-RML



Description

The FDA-BU-RML coupling module is a combination of an air valve and a fire damper, coupled with a single housing. This is an alternative to typeical fire valves. The main advantages of the FDA-BU-RML are better fire rating and a smaller size with more product configurations and application options. The main component of the coupling module is the CFDM fire damper. The fire damper is available in Ø 100, 125, 160, and 200 mm. The wing blade of the damper provides a very low resistance to the air flow. The fire damper can be ordered with one or two optional limit switches to feed back the actual blade position.

The FDA-BU-RML coupling modules match the most popular versions of air supply or exhaust valves which can be replaced with one another, even with the coupling module installed in a partition or already in use. The entire coupling module is compact. As a result, the air valves with the mounting frames cannot exceed 50 mm in height. This sizing requirements are met by these air valves: KW, KWI, KW-K, KWV, KN, KNI, KNV, and KN-K, and mounting frames: RM, RMI, and RML.
Note: Air valves are sold separately.

The FDA-BU-RML coupling modules are intended for installation in fire partitions, either walls or separating floors. The coupling module is installed in a partition just like a typeical fire valve: an installation opening must be made, the coupling module must be fitted in the opening, and the gaps must be sealed with fire-proof material having appropriate fire resistance.
Note: The fire resistance rating EIS 120, EIS 90 and EIS 60 is represented respectively as follows in product codes: 12, 09 and 06.

Product code example

Product code: **FDA - 09 - BU - RML-100**

Fire damper
EIS fire resistance rating
Type of fire damper
Frame w/gasket Ø

Dimensions

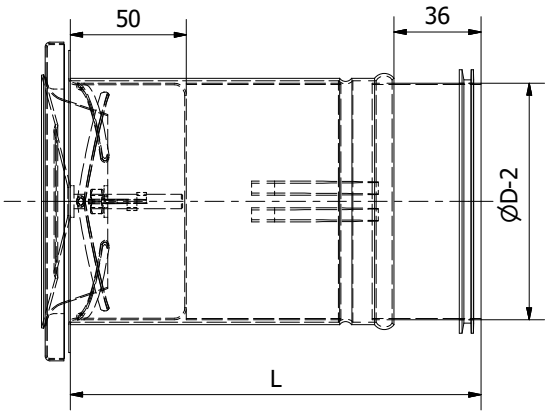

ØD (mm)	Length L (mm)
100	170
125	170
160	180
200	207

Design

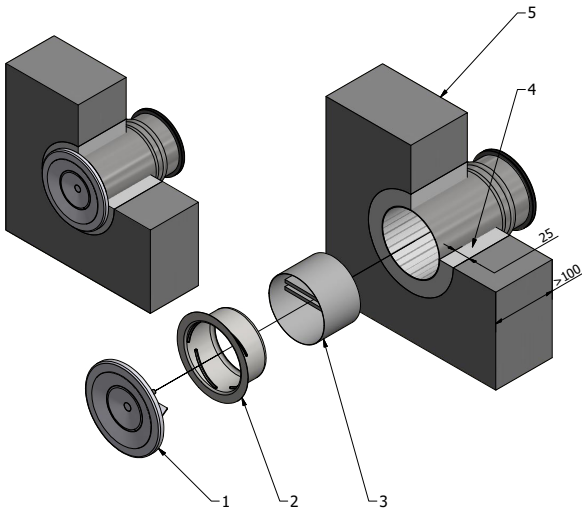

1. Air supply or air exhaust valve
2. Mounting frame
3. CFDM fire damper in RML casing
4. Seal: concrete or gypsum mortar
5. Fire partition

ALNOR® ventilation systems
is a legally protected trademark and technical patent. All rights reserved.

Air valve to fire damper coupling module

FDA-BU-RML

Tests and certificates

- Fire resistance rating: EIS 120, EIS 90, EIS 60,
- Test method as per EN 1366-2, classification method as per EN 13501-3+A1,
- Corrosion resistance as per EN 15650,
- EC declaration of conformity (EN 15650).

Installation

The coupling modules can be installed in:

- robust walls made from e.g. concrete units, solid brick, and cellular concrete units, with a minimum thickness of 100 mm;
- separating floors made of e.g. reinforced concrete with a minimum thickness of 100 mm and reinforced cellular concrete slabs with a minimum thickness of 125 mm;
- gypsum board walls on steel frames with fire resistance rated at EI 120 or EI 90.

Installation openings to be sealed in typical robust partitions:

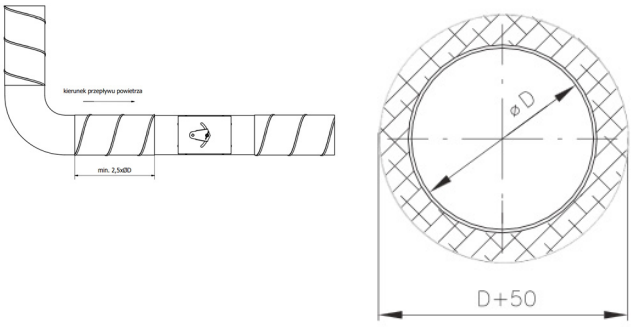

Installation openings to be sealed in gypsum board walls on steel frames:

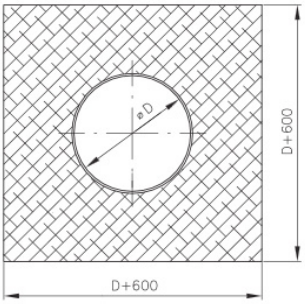

See the CFDM Operating and Maintenance Manual (TPM 118/16) for all information about wing-blade fire dampers and related installation options.

Matching air valves

The FDA-BU-RML coupling modules match the most popular versions of air supply or exhaust valves which can be replaced with one another, even with the coupling module installed in a partition or already in use. The entire coupling module is compact. As a result, the air valves with the mounting frames cannot exceed 50 mm in height. This sizing requirements are met by these air valves: KW, KWI, KW-K, KWV, KN, KNI, KNV, and KN-K, and mounting frames: RM, RMI, and RML.

Note: Air valves are sold separately.



ALNOR® ventilation systems
is a legally protected trademark and technical patent. All rights reserved.

Fire damper with air valve

CFDM-V



Description

CFDM-V device combine features of dish air valve and shut-off fire damper. It is an alternative for standard fire valvr. Main advantages of CFDM-V are high fire resistance classification, small dimensions and more versatile application.
Basic element of the device is fire damper CFDM. It is available in sizes Ø 100, 125, 160, 200 mm. Butterfly design of the damper ensures low pressure drop. As an option it can be equipped with one or two limit switches signalling position of the damper blades.
CFDM-V can be delivered with supply or extract dish valve.

CFDM-V device is designed to be mounted in the vertical or horizontal fire partitions. To mount the device, first make installation opening in the wall, install the device in proper place and then fill the gap with fire resistant sealant.
Available versions:

01	- thermal protective fuse
11	- thermal protective fuse + limit switch
15	- thermal protective fuse + 2 x limit switches
KN	- limit switches
KW	- extract dish valve

Product code example

Product code: **CFDM-V - 90 - 01 - KN - 100**

fire damper
fire resitnace EIS
options
valve type
Ø valve

Dimensions

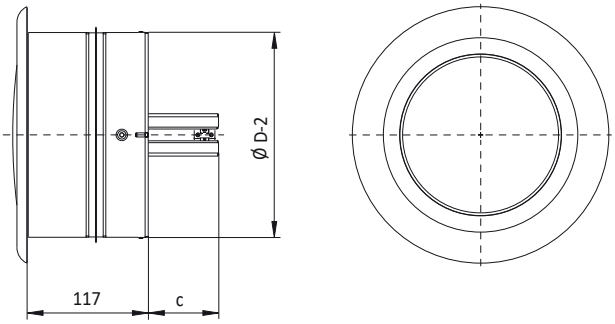

ØD [mm]	Length [mm]	Length C [mm]	Effective surface A_{ef} [m^2]
100	117	17.5	0.0030
125	117	30.2	0.0060
160	117	48	0.0119
200	117	68	0.0209

Design

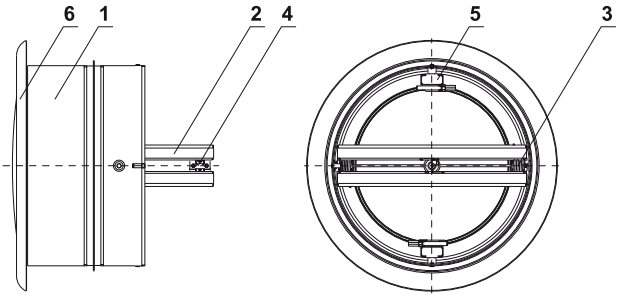

1. Damper casing.
2. Damper blade.
3. Shutting spring.
4. Thermal fuse.
5. Locking planchet.
6. Dish valve.

ALNOR® ventilation systems
is a legally protected trademark and technical patent. All rights reserved.

Fire damper with air valve

CFDM-V

Tests and certificates

- Fire resistance EIS 120, EIS 90, EIS 60 according to standard 13501-3+A1:2010
- CE certified according to standard EN 15650:2010

Selection charts

Air flow for fire damper with supply dish valve:

CFDM-V-KN-100

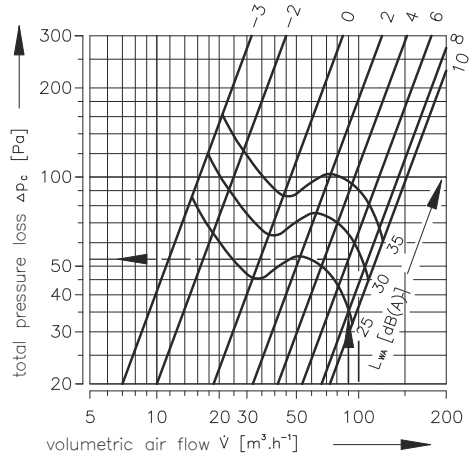

CFDM-V-KN-125

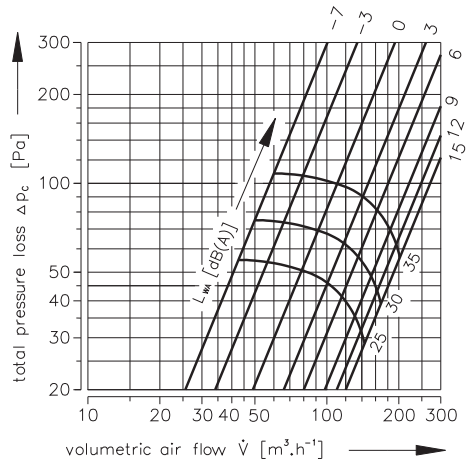

CFDM-V-KN-160

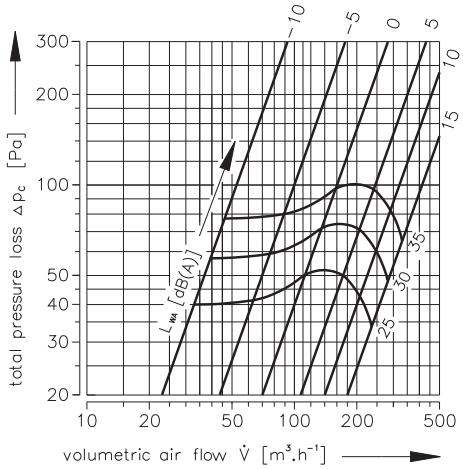

CFDM-V-KN-200

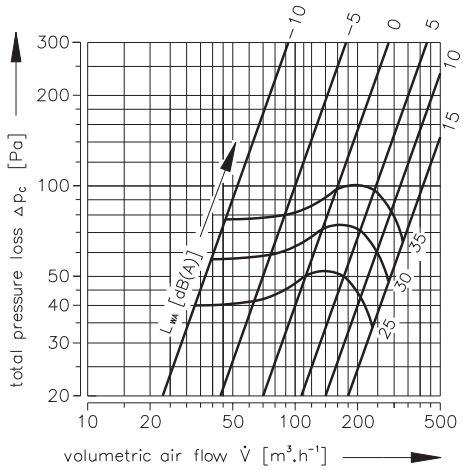

Air flow for fire damper with extract dish valve:

CFDM-V-KW-100

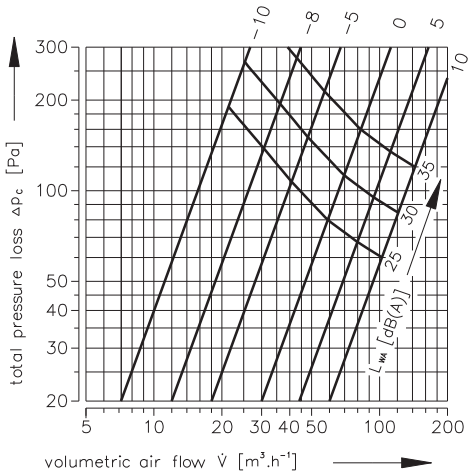

ALNOR® ventilation systems
is a legally protected trademark and technical patent. All rights reserved.

Fire damper with air valve

CFDM-V

CFDM-V-KW-125

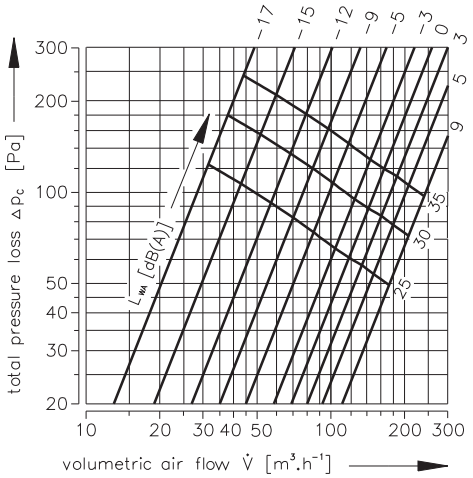

CFDM-V-KW-160

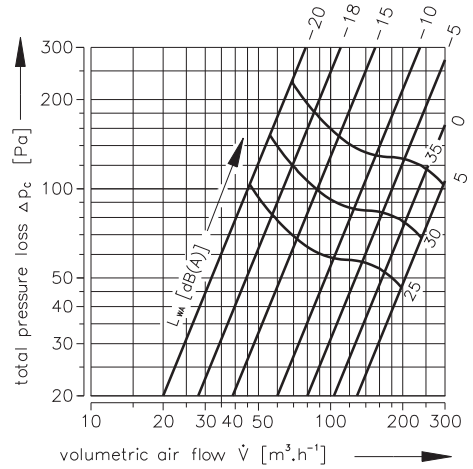

CFDM-V-KW-200

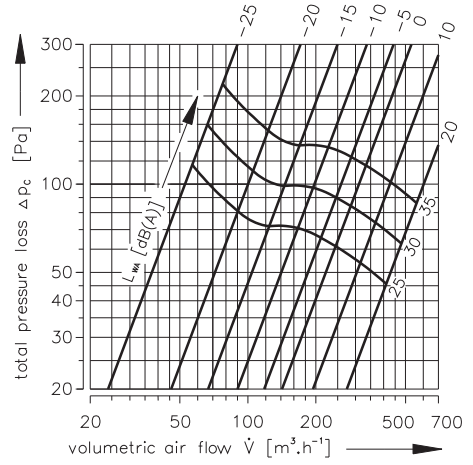

Installation

Installation of the CFDM-V fire damper with supply/ extract dish valve in gypsum wall construction.

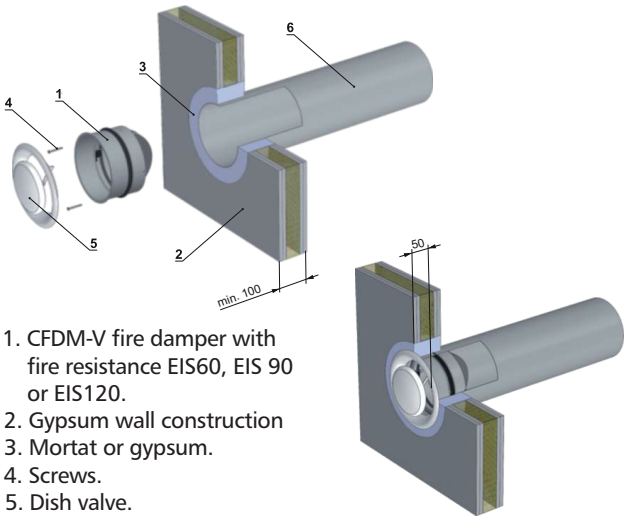

1. CFDM-V fire damper with fire resistance EIS60, EIS 90 or EIS120.
2. Gypsum wall construction
3. Mortat or gypsum.
4. Screws.
5. Dish valve.
6. Steel duct

Install duct together with construction edge. Install the fire damper in the duct so that the curved edge of the housing fits against the surface of the wall. Insert the fire damper housing in the duct and screw to the cosntruction. Insert the vavle into the housing.

ALNOR® ventilation systems
is a legally protected trademark and technical patent. All rights reserved.

Shut-off fire dampers

FDA-12-T/FDA-12-M



Description

The FDA-12 round fire dampers are designed for use in general ventilation systems to seal off smoke and fire between adjacent fire partitions.
The fire dampers are classified according to EN 13501-3+A1:2010P (Fire classification f construction products and building elements). The fire resistance was tested as per PN-EN 1366-2:2001P (Fire resistance tests for service installations - Part 2: Fire dampers). The entire manufacturing process meets the requirements of EN 15650:2010.
The FDA-12 fire dampers can be installed in horizontal and vertical fire partitions to provide fire resistance of EI 120 (ve ho i↔o) S (which may depend on the actual fire resistance of the partition).

The fire dampers are available in the nominal diameter sizes DN100, DN125, DN160, DN200, DN250, and DN315. All fire dampers have a pull spring control gear and a fusible thermal trip (in FDA-12-T) or a return-spring actuator coupled with a thermal trip (in FDA-12-M). The spring-action versions can be provided with optional limit switches. The casing and optional accessories are made from galvanized steel sheet; the fire damper blade is made from silicate cement board.

Revision: 008/03/20/PG.

Available materials - Product code examples
FDA-12- aaa - bbb - ccc

aaa - control method: T - pull spring with fusible thermal fuse
bbb - nominal diameter 100, 125, 160, 200, 250, 315
ccc - optional accessories:
- no limit switches (standard version)
- Z - limit switch (closed position feedback)
- O - limit switch (open position feedback)
- ZO - limit switch (open and closed position feedback)

aaa - control method: M - return-spring actuator with thermal fuse
bbb - nominal diameter 100, 125, 160, 200, 250, 315
ccc - optional accessories:
- B24 - BELIMO BFL24-T / BLF-24-T actuator
- B230 - BELIMO BFL230-T / BLF230-T actuator
- B24ST - BELIMO BFL24-T-ST / BLF-24-T-ST actuator

Intended use and application

Round fire dampers are designed for installation in general ventilation systems. When integrated into fire partitions, they provide equivalent protective performance and features as the partitions. The fire damper blade remains open under normal operating conditions. It is closed shut automatically in the event of a fire.
The fire dampers can be installed in the following partitions:

Type of partition	*Minimum partition thickness (mm)*
concrete separating floor	*150*
concrete wall	*115*
solid brick wall	*115*
cellular concrete unit wall	*115*
gypsum board wall on steel frame with fire resistance rated at EI 120 or higher	*125*

Product code example

Product code:	**FDA-12**	**aaa**	**bbb**	**ccc**
type				
Control method				
Ød				
Optional accessories				

ALNOR® ventilation systems
is a legally protected trademark and technical patent. All rights reserved.

Shut-off fire dampers

FDA-12-T/FDA-12-M

Dimensions and design of the damper

DN	Ød [mm]	e [mm]	L [mm]	L1 [mm]	f [mm]	Waga FDA-12-T [kg]	Waga FDA-12-M* [kg]
100	99	36	132	248	0,0	0,5	2,3
125	124	36	132	248	0,0	0,8	2,7
140	139	36	132	248	0,0	0,9	2,8
150	149	36	132	248	0,0	1,0	2,9
160	159	36	132	248	0,0	1,1	3,1
180	179	36	132	248	0,0	1,3	3,3
200	199	36	132	248	0,0	1,5	3,5
224	223	36	132	248	10	2,2	4,4
250	249	36	132	248	25	2,6	4,9
280	279	36	132	248	40	3,0	5,4
315	314	36	132	248	50	3,6	6,0

** BFL actuator, manufactured by Belimo*

FDA-12-T, fire damper with a spring and a thermal fuse (Ø100-200)

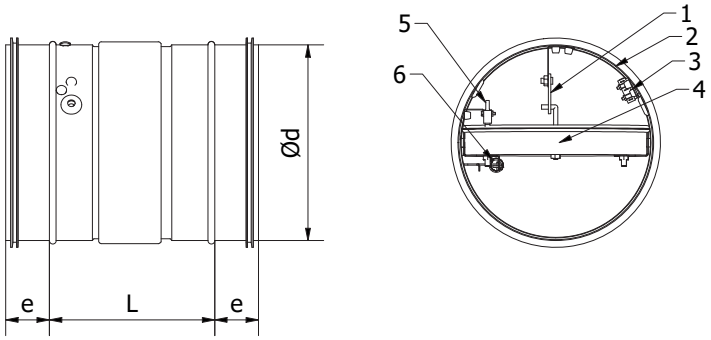

1 – thermal fuse; 2 – casing; 3 – limit switch - CLOSED (option); 4 – damper blade;
5 – limit switch - OPENED (option); 6 – tension spring

FDA-12-T, fire damper with a spring and a thermal fuse (Ø224-315)

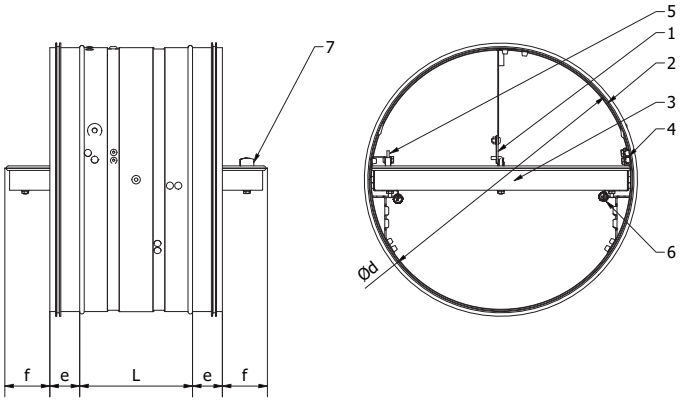

1 – thermal fuse; 2 – casing; 3 – damper blade; 4 – limit switch - CLOSED (option);
5 – limit switch - OPENED (option); 6 – tension spring; 7 – lock

ALNOR® ventilation systems
is a legally protected trademark and technical patent. All rights reserved.

FDA-12-T/FDA-12-M

FDA-12-M, fire damper with an actuator with the return spring (Ø100-200)

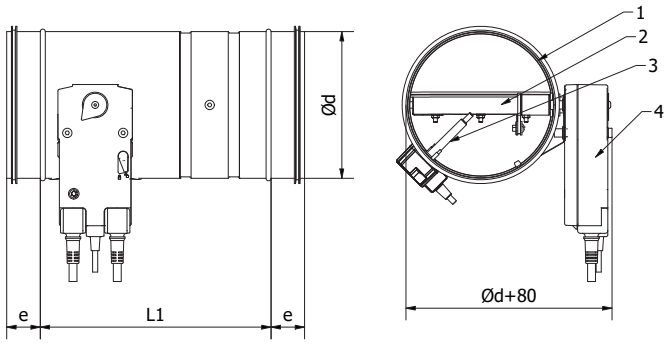

1 – casing; 2 – damper blade; 3 – release; 4 – actuator

FDA-12-M, fire damper with an actuator with the return spring (Ø224-315)

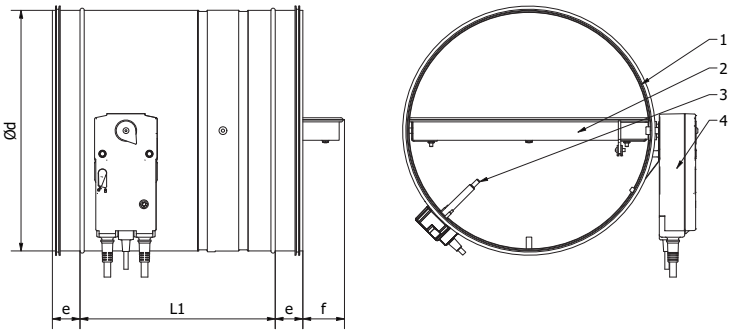

1 – casing; 2 – damper blade; 3 – release; 4 – actuator

ALNOR® ventilation systems
is a legally protected trademark and technical patent. All rights reserved.

Shut-off fire dampers

FDA-12-T/FDA-12-M

Technical specifications

The pressure loss and the sound pressure level of emission into the ductwork.

DN	v	q		Δp	L_W [dB/Okt]								L_W [dB]	L_WA [dB(A)]
					f_m [Hz]									
	[m/s]	[m³/s]	[l/s]	[Pa]	63	125	250	500	1000	2000	4000	8000		
100	2	39	11	4	12	12	11	11	11	5	-3	-11	19	14
	4	78	22	16	30	30	30	29	29	29	23	15	37	34
	6	116	32	35	41	41	40	40	40	40	38	30	48	46
	8	155	43	63	48	48	48	48	47	47	47	41	56	54
	10	194	54	98	54	54	54	54	53	53	53	49	62	60
125	2	66	18	2	11	11	10	10	8	0	-8	-16	17	11
	4	132	37	10	29	29	29	28	28	26	18	10	36	32
	6	198	55	22	40	40	39	39	39	39	33	25	47	44
	8	264	73	40	47	47	47	47	46	46	44	36	55	52
	10	330	92	62	53	53	53	53	52	52	52	44	61	59
160	2	116	32	2	10	10	10	10	3	-5	-13	-20	16	9
	4	232	64	6	28	28	28	28	28	21	13	5	35	31
	6	348	97	14	39	39	39	38	38	36	28	21	46	43
	8	464	129	25	47	47	46	46	46	46	39	31	54	51
	10	580	161	39	53	52	52	52	52	52	47	40	60	57
200	2	190	53	1	10	10	9	7	-1	-8	-16	-24	15	7
	4	380	105	4	28	28	28	28	27	20	12	4	35	30
	6	570	158	9	39	39	38	38	38	33	25	17	46	41
	8	759	211	16	46	46	46	46	46	43	35	28	54	50
	10	949	264	25	52	52	52	52	51	51	44	36	60	57
250	2	298	83	1	12	12	11	7	-1	-9	-17	-24	17	7
	4	596	166	4	30	30	30	30	25	17	9	1	36	30
	6	894	248	9	41	41	40	40	40	32	24	17	48	43
	8	1192	331	17	48	48	48	48	48	43	35	27	55	51
	10	1490	414	26	54	54	54	54	54	51	43	36	61	58
315	2	490	136	1	12	11	11	3	-5	-13	-20	-28	16	5
	4	981	272	3	30	30	30	29	21	13	6	-2	36	28
	6	1471	409	6	41	40	40	40	36	28	21	13	47	41
	8	1961	545	10	48	48	48	48	47	39	31	24	55	50
	10	2451	681	16	54	54	54	54	53	48	40	32	61	57

ALNOR® ventilation systems
is a legally protected trademark and technical patent. All rights reserved.

Shut-off fire dampers

FDA2-12-T / FDA2-12-M



Description

The FDA2-12 round fire dampers are designed for use in general ventilation systems to seal off smoke and fire between adjacent fire partitions.
The fire dampers are classified according to EN 13501-3+A1:2010P (Fire classification of construction products and building elements). The fire resistance was tested as per PN-EN 1366-2:2015 (Fire resistance tests for service installations — Part 2: Fire dampers). The entire manufacturing process meets the requirements of EN 15650:2010.
The FDA2-12 fire dampers can be installed in horizontal and vertical fire partitions to provide fire resistance of EI 120 (ve ho i↔o) S (which may depend on the actual fire resistance of the partition).

The fire dampers are available in the nominal diameter sizes DN200, DN224, DN250, DN280, DN300, DN315, DN355, DN400, DN450, DN500, DN560, DN600, DN630. All fire dampers have a torsion spring trip (in FDA2-12-T) or a return-spring actuator coupled with a thermal trip (in FDA2-12-M). The spring-action versions can be provided with optional limit switches. The casing and optional accessories are made from galvanized steel sheet; the fire damper blade is made from silicate cement board.

Version 002/04/19

Product code examples

Product code: **FDA2 - aaa - bbb - ccc**

type
control method
DN (ØD)
Optional accessories

Intended use and application

Round fire dampers are designed for installation in general ventilation systems. When integrated into fire partitions, they provide equivalent protective performance and features as the partitions. The fire damper blade remains open under normal operating conditions. It is closed shut automatically in the event of a fire.

The fire dampers can be installed in the following partitions:

Partition type	*Minimum partition thickness (mm)*
concrete separating floor	150
concrete wall	135
solid brick wall	135
cellular concrete unit wall	135
gypsum board wall on steel frame	135

See all essential data in the respective Operating and Maintenance Manual.

Product identification:
FDA2-12-aaa-bbb-ccc:
aaa – control:
T - torsion spring trip;
bbb – nominal size (DN):
200, 224, 250, 280, 300, 315, 355, 400, 450, 500, 560, 600, 630 mm;
ccc – optional accessories:
no limit switches (standard version);
Z - limit switch (closed position feedback);
O - limit switch (open position feedback);
ZO - limit switch (open and closed position feedback);

aaa – control:
M - return-spring actuator coupled with a thermal trip;
bbb – nominal diameter (DN):
200, 224, 250, 280, 300, 315, 355, 400, 450, 500, 560, 600, 630 mm;
ccc – optional accessories:
B24 - actuator Belimo BFL/BFN/BF24-T ;
B230 - actuator Belimo BFL/BFN/BF230-T;
B24ST – actuator Belimo BFL/BFN/BF24-T-ST;

ALNOR® ventilation systems
is a legally protected trademark and technical patent. All rights reserved.

Shut-off fire dampers

FDA2-12-T / FDA2-12-M

Dimensions

FDA2-12-T (Ø200-400)
Fire damper w/torsion spring trip

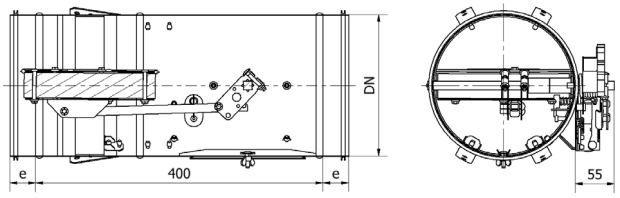

FDA2-12-T (Ø450-630)
Fire damper w/torsion spring trip

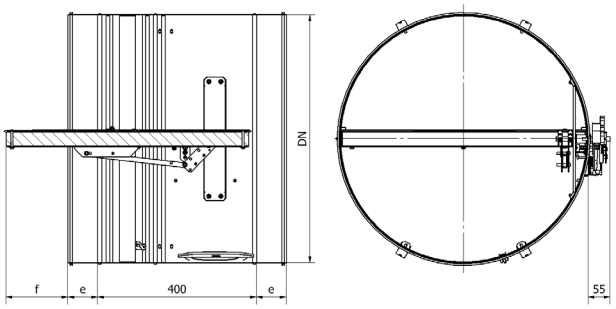

FDA2-12-M (Ø200-400)
Fire damper with return-spring actuator

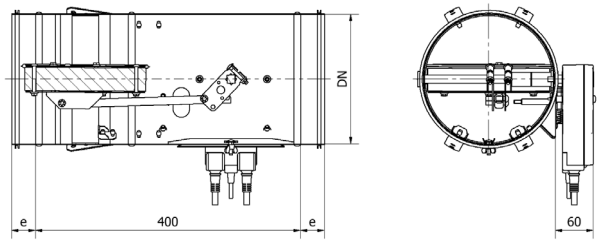

FDA2-12-M (Ø450-630)
Fire damper with return-spring actuator

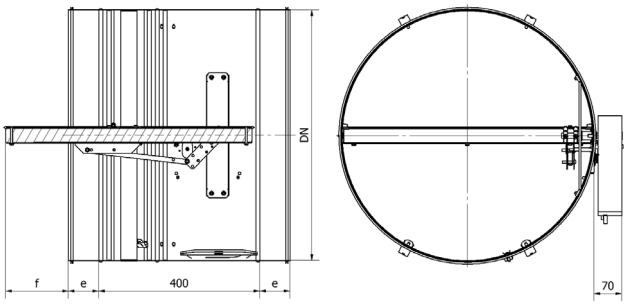

DN *[mm]*	*L* *[mm]*	*e* *[mm]*	*f* *[mm]*	*Actuator*	A_{eff} *[m²]*	*Weight FDA2-12-T* *[kg]*	*Weight FDA2-12-M* *[kg]*
200	400	36	-	BFL	0.02	5.6	6.3
224	400	36	-	BFL	0.03	6.5	7.3
250	400	36	6	BFL	0.04	7.1	7.8
280	400	36	21	BFL	0.05	7.8	8.5
300	400	36	31	BFL	0.06	8.3	9.0
315	400	36	38	BFL	0.06	8.7	9.4
355	400	55	40	BFL	0.08	10.6	11.3
400	400	55	62	BFL	0.11	12.0	12.7
450	400	75	66	BFN	0.14	13.6	14.6
500	400	75	90	BFN	0.17	15.4	16.4
560	400	75	120	BFN	0.22	17.6	18.7
600	400	75	140	BF	0.26	19.3	21.9
630	400	75	155	BF	0.28	20.5	23.1

BFL/BFN/BF actuator, manufactured by Belimo Siłowniki S.A.

ALNOR® ventilation systems
is a legally protected trademark and technical patent. All rights reserved.

FDA2-12-T / FDA2-12-M

Design of the damper

FDA2-12-T (Ø200-400)
Fire damper w/torsion spring trip

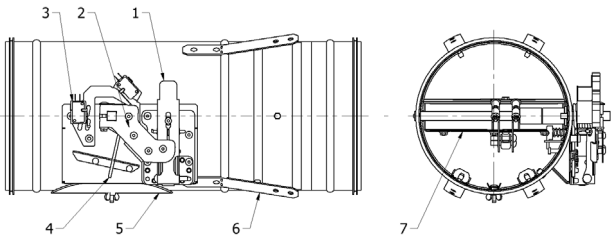

1 - trip, 2 - control arm, 3 - limit switch, 4 - torsion spring
5 - access door, 6 - installation bracket, 7 - shutter.

FDA2-12-T (Ø450-630)
Fire damper w/torsion spring trip

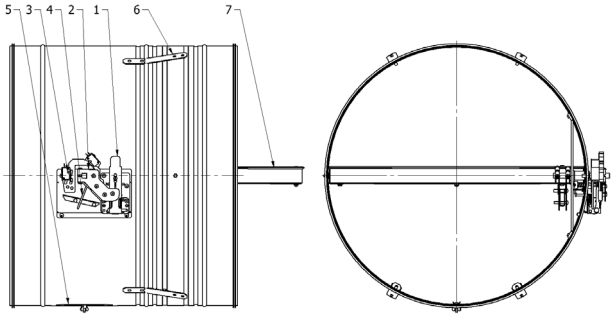

1 - trip, 2 - control arm, 3 - limit switch, 4 - torsion spring
5 - access door, 6 - installation bracket, 7 - shutter.

FDA2-12-M (Ø200-400)
Fire damper with return-spring actuator

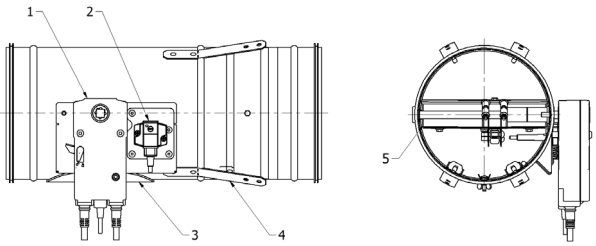

1 - motor operator, 2 - thermal electric trip, 3 - access door
4 - installation bracket, 5 - shutter.

FDA2-12-M (Ø450-630)
Fire damper with return-spring actuator

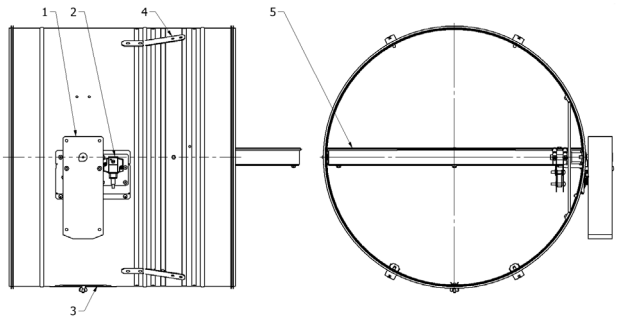

1 - motor operator, 2 - thermal electric trip, 3 - access door
4 - installation bracket, 5 - shutter.

ALNOR® ventilation systems
is a legally protected trademark and technical patent. All rights reserved.

Shut-off fire dampers

FDA2-12-T / FDA2-12-M

Technical specifications

Fire damper hydraulic and sound performance values

DN	v [m/s]	q [m³/h]	q [l/s]	Δp [Pa]	L_W [dB/Okt] f_m [Hz] 63	125	250	500	1000	2000	4000	8000	L_W [dB]	L_{WA} [dB(A)]
200	2	168	47	3	15	15	14	14	7	-1	-9	-17	21	14
	4	336	93	10	33	33	33	33	32	25	17	9	40	35
	6	503	140	23	44	44	43	43	43	40	32	24	51	47
	8	671	186	41	51	51	51	51	51	50	43	35	59	56
	10	839	233	64	57	57	57	57	56	56	51	43	65	62
224	2	218	61	2	15	14	14	12	4	-3	-11	-19	20	12
	4	437	121	8	33	33	32	32	30	23	15	7	39	34
	6	655	182	18	44	43	43	43	43	38	30	22	50	46
	8	874	243	33	51	51	51	50	50	48	41	33	58	55
	10	1092	303	51	57	57	57	56	56	56	49	41	64	61
250	2	279	78	2	14	14	14	11	3	-5	-13	-21	20	11
	4	558	155	7	33	33	32	32	29	21	13	5	39	33
	6	838	233	15	43	43	43	43	43	36	28	20	50	46
	8	1117	310	27	51	51	51	50	50	47	39	31	58	54
	10	1396	388	43	57	57	56	56	56	55	47	39	64	61
280	2	360	100	1	15	14	14	9	1	-7	-15	-22	20	10
	4	720	200	6	33	33	32	32	28	20	13	5	39	33
	6	1079	300	13	43	43	43	43	42	34	26	19	50	45
	8	1439	400	23	51	51	51	50	50	45	37	29	58	54
	10	1799	500	36	57	57	57	56	56	53	46	38	64	60
300	2	419	116	1	15	15	14	8	0	-7	-15	-23	20	10
	4	839	233	5	33	33	33	32	26	18	11	3	39	32
	6	1258	349	12	44	43	43	43	41	34	26	18	50	45
	8	1678	466	21	51	51	51	51	50	44	36	29	58	54
	10	2097	582	33	57	57	57	57	56	53	45	37	64	60
315	2	467	130	1	15	14	14	7	0	-8	-16	-24	20	9
	4	933	259	5	33	33	33	32	25	18	10	2	39	32
	6	1400	389	11	44	43	43	43	41	33	25	17	50	44
	8	1867	519	20	51	51	51	51	50	43	36	28	58	53
	10	2333	648	31	57	57	57	56	56	52	44	36	64	60
355	2	606	168	1	13	13	12	4	-3	-11	-19	-27	18	7
	4	1212	337	4	32	31	31	30	22	15	7	-1	37	30
	6	1817	505	9	42	42	42	42	38	30	22	14	48	42
	8	2423	673	17	50	50	49	49	48	41	33	25	56	51
	10	3029	841	26	56	56	55	55	55	49	41	33	63	58
400	2	783	217	1	13	13	10	2	-5	-13	-21	-29	17	5
	4	1566	435	4	31	31	31	28	21	13	5	-3	37	28
	6	2349	652	8	42	42	42	41	36	28	20	12	48	41
	8	3132	870	14	50	49	49	49	46	39	31	23	56	50
	10	3915	1087	23	55	55	55	55	55	47	39	31	62	58

ALNOR® ventilation systems
is a legally protected trademark and technical patent. All rights reserved.

Shut-off fire dampers

FDA2-12-T / FDA2-12-M

DN	v [m/s]	q [m³/h]	q [l/s]	Δp [Pa]	L_W [dB/Okt] f_m [Hz] 63	125	250	500	1000	2000	4000	8000	L_W [dB]	L_{WA} [dB(A)]
450	2	1007	280	1	12	12	8	0	-8	-16	-24	-31	16	3
	4	2014	559	3	30	30	30	26	18	10	2	-6	35	26
	6	3021	839	7	41	41	40	40	33	25	17	10	47	40
	8	4028	1119	13	48	48	48	48	44	36	28	20	55	48
	10	5035	1399	20	54	54	54	54	52	44	36	29	61	55
500	2	1259	350	1	12	12	6	-2	-10	-17	-25	-33	15	1
	4	2518	699	3	30	30	30	24	16	9	1	-7	35	25
	6	3777	1049	6	41	41	40	39	31	24	16	8	46	39
	8	5036	1399	11	48	48	48	48	42	34	27	19	54	48
	10	6295	1749	18	54	54	54	54	50	43	35	27	60	55
560	2	1600	444	1	11	11	4	-4	-12	-20	-28	-35	14	-1
	4	3200	889	3	29	29	29	22	14	6	-2	-10	34	23
	6	4800	1333	6	40	39	39	37	29	21	13	6	45	37
	8	6400	1778	10	47	47	47	47	40	32	24	16	53	46
	10	8000	2222	16	53	53	53	53	48	40	32	25	59	53
600	2	1856	516	1	11	11	3	-5	-13	-21	-28	-36	14	-1
	4	3713	1031	2	29	29	29	21	13	5	-2	-10	34	23
	6	5569	1547	5	40	40	39	36	28	20	13	5	45	36
	8	7426	2063	9	47	47	47	47	39	31	23	16	53	46
	10	9282	2578	15	53	53	53	53	47	40	32	24	59	53
630	2	2049	569	1	10	9	2	-6	-14	-22	-30	-37	13	-2
	4	4098	1138	2	29	29	28	20	12	4	-3	-11	34	22
	6	6148	1708	5	40	39	39	35	27	20	12	4	45	36
	8	8197	2277	9	47	47	47	46	38	30	22	15	53	45
	10	10246	2846	14	53	53	53	52	46	39	31	23	59	52

ALNOR® ventilation systems
is a legally protected trademark and technical patent. All rights reserved.

Shut-off fire dampers

FDA2-12-T / FDA2-12-M

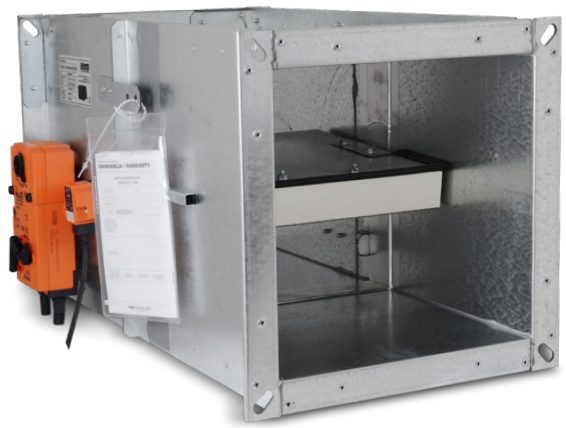

Description

The FDA2-12 square fire dampers are designed for use in general ventilation systems to seal off smoke and fire between adjacent fire partitions.
The fire dampers are classified according to EN 13501-3+A1:2010P (Fire classification of construction products and building elements). The fire resistance was tested as per PN-EN 1366-2:2015 (Fire resistance tests for service installations — Part 2: Fire dampers). The entire manufacturing process meets the requirements of EN 15650:2010.
The FDA2-12 fire dampers can be installed in horizontal and vertical fire partitions to provide fire resistance of EI 120 (ve ho i↔o) S (which may depend on the actual fire resistance of the partition).

The fire dampers are available in the nominal sizes 160x160 – 1000x500 mm. All fire dampers have a torsion spring trip (in FDA2-12-T) or a return-spring actuator coupled with a thermal trip (in FDA2-12-M). The spring-action versions can be provided with optional limit switches. The casing and optional accessories are made from galvanized steel sheet; the fire damper blade is made from silicate cement board.

Version 002/04/19

Product code examples

Product code: **FDA2 - aaa - bbb - ccc**

type
control method
size
Optional accessories

Intended use and application

Square fire dampers are designed for installation in general ventilation systems. When integrated into fire partitions, they provide equivalent protective performance and features as the partitions. The fire damper blade remains open under normal operating conditions. It is closed shut automatically in the event of a fire.

The fire dampers can be installed in the following partitions:

Partition type	*Minimum partition thickness (mm)*
concrete separating floor	150
concrete wall	135
solid brick wall	135
cellular concrete unit wall	135
gypsum board wall on steel frame	135

Fire dampers can be installed with both horizontal and vertical axis of rotation.
NOTE: If the fire damper installation with a vertical axis of rotation and with an actuator at the bottom of the casing is required, notify the manufacturer about it before placing an order.

See all essential data in the respective Operating and Maintenance Manual.

Product identification:
FDA2-12-aaa-bbb-ccc:
aaa – control:
T - torsion spring trip;
bbb – size:
160x160 – 1000x500 mm;
ccc – optional accessories:
no limit switches (standard version);
Z - limit switch (closed position feedback);
O - limit switch (open position feedback);
ZO - limit switch (open and closed position feedback);

aaa – control:
M - return-spring actuator coupled with a thermal trip;
bbb – size:
160x160 – 1000x500 mm
ccc – optional accessories:
B24 - actuator Belimo BFL/BFN/BF24-T ;
B230 - actuator Belimo BFL/BFN/BF230-T;
B24ST - actuator Belimo BFL/BFN/BF24-T-ST;

ALNOR® ventilation systems
is a legally protected trademark and technical patent. All rights reserved.

Shut-off fire dampers

FDA2-12-T / FDA2-12-M

Dimensions

FDA2-12-T (160x160 - 1000-300 mm)
Fire damper w/torsion spring trip

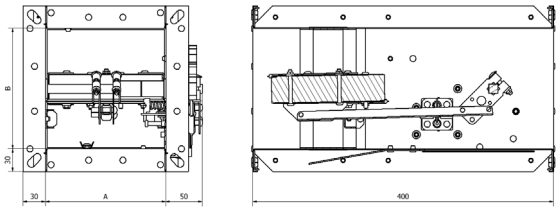

FDA2-12-T (>1000-300 mm)
Fire damper w/torsion spring trip

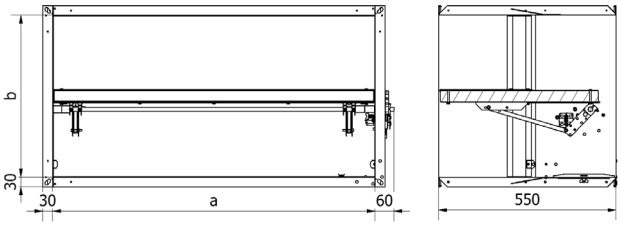

FDA2-12-M (160x160 - 1000x300 mm)
Fire damper with return-spring actuator

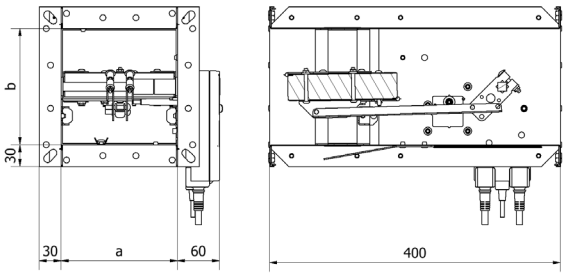

FDA2-12-M (>1000x300 mm)
Fire damper with return-spring actuator

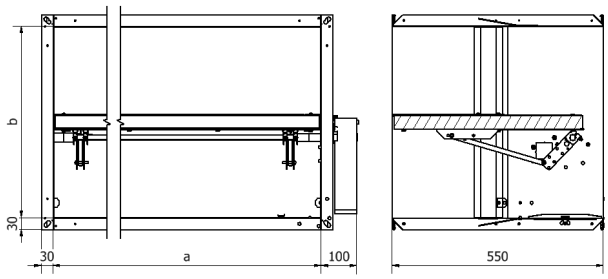

a [mm]	*b* [mm]	*L* [mm]	*Operator type*	A_{eff} [m^2]	*Weight FDA2-12-T* [kg]	*Weight FDA2-12-M* [kg]
160	160	400	BFL	0.02	6.2	6.9
200	160	400	BFL	0.03	6.6	7.4
250	160	400	BFL	0.03	7.2	8.0
300	160	400	BFL	0.04	7.8	8.5
350	160	400	BFL	0.05	8.4	9.1
400	160	400	BFL	0.06	9.0	9.7
450	160	400	BFL	0.07	10.5	11.3
500	160	400	BFL	0.07	11.2	11.9
550	160	400	BFL	0.08	11.9	12.6
600	160	400	BFL	0.09	12.5	13.3
650	160	400	BFL	0.10	13.2	13.9
700	160	400	BFL	0.11	13.9	14.6
750	160	400	BFL	0.11	14.5	15.3
800	160	400	BFL	0.12	15.2	15.9
850	160	400	BFL	0.13	15.9	16.6
900	160	400	BFL	0.14	16.5	17.3
950	160	400	BFL	0.15	17.2	17.9
1000	160	400	BFL	0.15	17.9	18.6

ALNOR® ventilation systems
is a legally protected trademark and technical patent. All rights reserved.

Shut-off fire dampers

FDA2-12-T / FDA2-12-M

a [mm]	b [mm]	L [mm]	Operator type	A_{eff} [m^2]	Weight FDA2-12-T [kg]	Weight FDA2-12-M [kg]
200	200	400	BFL	0.03	7.2	7.9
250	200	400	BFL	0.04	7.8	8.6
300	200	400	BFL	0.05	8.5	9.2
350	200	400	BFL	0.06	9.1	9.9
400	200	400	BFL	0.07	9.8	10.5
450	200	400	BFL	0.08	11.4	12.2
500	200	400	BFL	0.09	12.2	12.9
550	200	400	BFL	0.10	12.9	13.6
600	200	400	BFL	0.11	13.6	14.4
650	200	400	BFL	0.12	14.3	15.1
700	200	400	BFL	0.13	15.1	15.8
750	200	400	BFL	0.14	15.8	16.5
800	200	400	BFL	0.15	16.5	17.3
850	200	400	BFL	0.16	17.2	18.0
900	200	400	BFL	0.17	18.0	18.7
950	200	400	BFL	0.18	18.7	19.4
1000	200	400	BFL	0.19	19.4	20.2
250	250	550	BFL	0.05	9.9	10.7
300	250	550	BFL	0.07	10.8	11.5
350	250	550	BFL	0.08	11.6	12.4
400	250	550	BFL	0.09	12.5	13.2
450	250	550	BFL	0.10	14.9	15.6
500	250	550	BFL	0.12	15.8	16.6
550	250	550	BFL	0.13	16.8	17.5
600	250	550	BFL	0.14	17.7	18.5
650	250	550	BFL	0.15	18.7	19.4
700	250	550	BFL	0.17	19.7	20.4
750	250	550	BFL	0.18	20.6	21.4
800	250	550	BFL	0.19	21.6	22.3
850	250	550	BFL	0.20	22.5	23.3
900	250	550	BFL	0.22	23.5	24.2
950	250	550	BFL	0.23	24.5	25.2
1000	250	550	BFL	0.24	25.4	26.2
300	300	550	BFL	0.08	13.1	13.8
350	300	550	BFL	0.09	14.1	14.8
400	300	550	BFL	0.11	15.1	15.9
450	300	550	BFL	0.12	16.2	16.9
500	300	550	BFL	0.14	17.2	17.9
550	300	550	BFL	0.15	18.2	19.0
600	300	550	BFL	0.17	19.3	20.0
650	300	550	BFL	0.18	20.3	21.0
700	300	550	BFL	0.20	21.3	22.1
750	300	550	BFL	0.21	22.4	23.1
800	300	550	BFL	0.23	23.4	24.2
850	300	550	BFN	0.24	24.4	25.5
900	300	550	BFN	0.26	25.5	26.5
950	300	550	BFN	0.27	26.5	27.6
1000	300	550	BFN	0.29	27.5	28.6

ALNOR® ventilation systems
is a legally protected trademark and technical patent. All rights reserved.

Shut-off fire dampers

FDA2-12-T / FDA2-12-M

a [mm]	*b* [mm]	*L* [mm]	*Operator type*	A_{eff} [m^2]	*Weight FDA2-12-T* [kg]	*Weight FDA2-12-M* [kg]
350	350	550	BFN	0.11	15.3	16.3
400	350	550	BFN	0.13	16.4	17.4
450	350	550	BFN	0.14	17.5	18.5
500	350	550	BFN	0.16	18.6	19.6
550	350	550	BFN	0.18	19.7	20.7
600	350	550	BFN	0.20	20.8	21.8
650	350	550	BFN	0.21	21.9	23.0
700	350	550	BFN	0.23	23.0	24.1
750	350	550	BFN	0.25	24.1	25.2
800	350	550	BFN	0.27	25.2	26.3
850	350	550	BFN	0.28	26.3	27.4
900	350	550	BFN	0.30	27.5	28.5
950	350	550	BFN	0.32	28.6	29.6
1000	350	550	BFN	0.34	29.7	30.7
400	400	550	BFN	0.15	17.6	18.7
450	400	550	BFN	0.17	18.8	19.8
500	400	550	BFN	0.19	20.0	21.0
550	400	550	BFN	0.21	21.2	22.2
600	400	550	BFN	0.23	22.3	23.4
650	400	550	BFN	0.25	23.5	24.6
700	400	550	BFN	0.27	24.7	25.7
750	400	550	BFN	0.29	25.9	26.9
800	400	550	BFN	0.31	27.1	28.1
850	400	550	BFN	0.33	28.2	29.3
900	400	550	BFN	0.35	29.4	30.5
950	400	550	BFN	0.37	30.6	31.6
1000	400	550	BFN	0.39	31.8	32.8
450	450	550	BFN	0.19	20.1	21.1
500	450	550	BFN	0.21	21.4	22.4
550	450	550	BFN	0.23	22.6	23.7
600	450	550	BFN	0.25	23.9	24.9
650	450	550	BFN	0.28	25.1	26.2
700	450	550	BFN	0.30	26.4	27.4
750	450	550	BFN	0.32	27.6	28.7
800	450	550	BFN	0.34	28.9	29.9
850	450	550	BFN	0.37	30.1	31.2
900	450	550	BFN	0.39	31.4	32.4
950	450	550	BFN	0.41	32.7	33.7
1000	450	550	BFN	0.43	33.9	35.0

ALNOR® ventilation systems
is a legally protected trademark and technical patent. All rights reserved.

Shut-off fire dampers

FDA2-12-T / FDA2-12-M

a [mm]	*b* [mm]	*L* [mm]	*Operator type*	A_{eff} [m^2]	*Weight FDA2-12-T* [kg]	*Weight FDA2-12-M* [kg]
500	500	550	BFN	0.23	22.7	23.8
550	500	550	BFN	0.26	24.1	25.1
600	500	550	BFN	0.28	25.4	26.4
650	500	550	BFN	0.31	26.7	27.8
700	500	550	BFN	0.33	28.1	29.1
750	500	550	BFN	0.36	29.4	30.4
800	500	550	BFN	0.38	30.7	31.8
850	500	550	BFN	0.41	32.0	33.1
900	500	550	BFN	0.43	33.4	34.4
950	500	550	BF	0.46	36.3	38.9
1000	500	550	BF	0.48	37.6	40.3

BFL/BFN/BF actuator, manufactured by Belimo Siłowniki S.A.

Design of the damper

FDA2-12-T (160x160 - 1000-300 mm)
Fire damper w/torsion spring trip

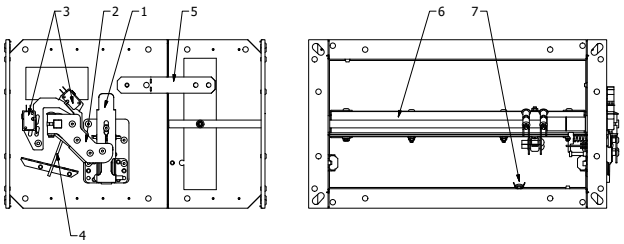

1 - trip, 2 - control arm, 3 - limit switch, 4 - torsion spring
5 - installation bracket, 6 - shutter, 7 - access door.

FDA2-12-T (>1000-300 mm)
Fire damper w/torsion spring trip

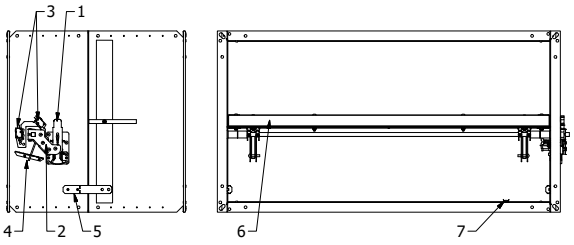

1 - trip, 2 - control arm, 3 - limit switch, 4 - torsion spring
5 - installation bracket, 6 - shutter, 7 - access door.

FDA2-12-M (160x160 - 1000x300 mm)
Fire damper with return-spring actuator

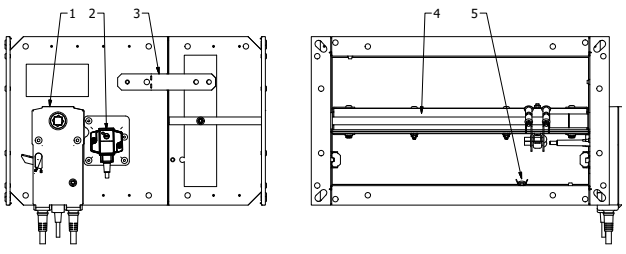

1 - motor operator, 2 - thermal electric trip, 3 - installation bracket, 4 - shutter, 5 - access door.

FDA2-12-M (>1000x300 mm)
Fire damper with return-spring actuator

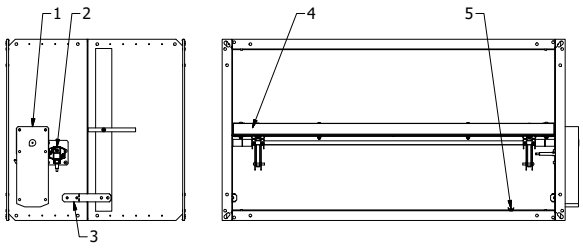

1 - motor operator, 2 - thermal electric trip, 3 - installation bracket, 4 - shutter, 5 - access door.

ALNOR® ventilation systems
is a legally protected trademark and technical patent. All rights reserved.

FDA2-12-T / FDA2-12-M

Technical specifications

Fire damper hydraulic and sound performance values

a [mm]	*v* [m/s]	Δp [Pa] b [mm]																	
		160	200	250	300	350	400	450	500	550	600	650	700	750	800	850	900	950	1000
160	2	12	10	9	8	7	7	6	6	6	6	5	5	5	5	5	5	5	5
	4	49	40	35	31	29	27	25	24	23	22	22	21	21	20	20	19	19	19
	6	111	91	79	71	65	61	57	55	52	51	49	48	46	45	44	43	43	42
	8	198	161	140	126	115	108	102	97	93	90	87	85	82	80	78	77	76	74
	10	309	252	219	196	180	168	159	152	145	140	136	132	128	126	123	121	118	116
	12	445	363	315	283	260	242	229	219	209	202	196	190	185	181	177	174	170	167
200	2	-	6	5	5	4	4	4	3	3	3	3	3	3	3	3	3	3	3
	4	-	24	21	18	17	16	15	14	13	13	12	12	12	11	11	11	11	10
	6	-	54	46	41	38	35	33	31	30	29	28	27	26	26	25	24	24	24
	8	-	96	83	74	67	62	59	56	53	51	49	48	46	46	44	44	43	42
	10	-	151	129	115	105	97	91	87	83	80	77	75	72	71	69	68	67	65
	12	-	217	186	166	151	140	132	125	120	115	111	108	104	102	100	98	96	94
250	2	-	-	4	3	3	3	2	2	2	2	2	2	2	2	2	2	2	2
	4	-	-	15	13	12	11	10	9	9	9	8	8	8	8	7	7	7	7
	6	-	-	33	29	26	24	22	21	20	19	19	18	17	17	16	16	16	15
	8	-	-	58	51	46	43	40	38	36	34	33	32	31	30	29	28	28	27
	10	-	-	91	80	72	67	62	59	56	53	51	50	48	47	46	44	44	43
	12	-	-	131	115	104	96	90	85	80	77	74	71	70	68	66	64	63	61
300	2	-	-	-	2	2	2	2	2	2	2	2	1	1	1	1	1	1	1
	4	-	-	-	10	9	8	8	7	7	6	6	6	6	5	5	5	5	5
	6	-	-	-	22	20	18	17	16	15	14	14	13	13	12	12	12	11	11
	8	-	-	-	40	36	33	30	28	27	26	24	24	23	22	22	21	20	20
	10	-	-	-	62	56	51	48	44	42	40	38	37	36	34	34	32	32	31
	12	-	-	-	90	80	73	69	64	60	58	55	53	51	49	48	47	46	45
350	2	-	-	-	-	2	2	2	1	1	1	1	1	1	1	1	1	1	1
	4	-	-	-	-	8	7	6	6	5	5	5	5	5	4	4	4	4	4
	6	-	-	-	-	17	15	14	13	12	12	11	11	10	10	10	9	9	9
	8	-	-	-	-	30	27	25	23	22	21	20	19	18	17	17	16	16	15
	10	-	-	-	-	47	43	39	36	34	32	30	29	29	27	27	25	25	24
	12	-	-	-	-	68	61	56	52	49	47	44	42	41	39	38	37	36	35
400	2	-	-	-	-	-	1	1	1	1	1	1	1	1	1	1	1	1	1
	4	-	-	-	-	-	6	5	5	5	4	4	4	4	4	4	3	3	3
	6	-	-	-	-	-	13	12	11	11	10	9	9	9	8	8	8	8	7
	8	-	-	-	-	-	24	22	20	19	17	17	16	15	15	14	14	13	13
	10	-	-	-	-	-	37	34	31	29	27	26	25	24	23	22	22	21	20
	12	-	-	-	-	-	53	48	45	42	39	38	36	35	33	32	31	30	29

ALNOR® ventilation systems
is a legally protected trademark and technical patent. All rights reserved.

Shut-off fire dampers

FDA2-12-T / FDA2-12-M

a [mm]	v [m/s]	Δp [Pa] b [mm]																	
		160	200	250	300	350	400	450	500	550	600	650	700	750	800	850	900	950	1000
450	2	-	-	-	-	-	-	1	1	1	1	1	1	1	1	1	1	1	1
	4	-	-	-	-	-	-	5	4	4	4	4	4	3	3	3	3	3	3
	6	-	-	-	-	-	-	11	10	9	9	8	8	8	7	7	7	6	6
	8	-	-	-	-	-	-	20	18	17	16	15	14	13	13	12	12	11	11
	10	-	-	-	-	-	-	30	28	26	25	24	22	21	20	19	18	18	17
	12	-	-	-	-	-	-	44	40	38	36	34	32	30	29	27	27	26	25
500	2	-	-	-	-	-	-	-	1	1	1	1	1	1	1	1	1	1	1
	4	-	-	-	-	-	-	-	4	4	4	3	3	3	3	3	3	3	2
	6	-	-	-	-	-	-	-	9	9	8	8	7	7	7	6	6	6	5
	8	-	-	-	-	-	-	-	17	15	14	13	13	12	12	11	11	10	10
	10	-	-	-	-	-	-	-	26	24	22	21	20	19	18	17	17	16	15
	12	-	-	-	-	-	-	-	38	35	32	30	29	27	27	25	24	23	22

The pressure loss and the sound pressure level of emission into the ductwork.

a [mm]	v [m/s]	L_{WA} [dB(A)] b [mm]																	
		160	200	250	300	350	400	450	500	550	600	650	700	750	800	850	900	950	1000
160	2	-6	-6	-7	-7	-7	-8	-8	-8	-8	-8	-8	-7	-7	-7	-7	-7	-7	-7
	4	15	14	14	13	13	13	13	13	13	13	13	13	13	14	14	14	14	14
	6	26	26	25	25	25	25	25	25	25	25	25	25	25	25	26	26	26	26
	8	34	34	33	33	33	33	33	33	33	33	33	33	33	34	34	34	34	34
	10	40	40	40	39	39	39	39	40	40	40	40	40	40	40	40	40	40	40
	12	45	45	45	44	44	44	44	44	44	45	45	45	45	45	45	45	45	45
200	2	-	-12	-12	-13	-13	-13	-13	-13	-13	-13	-12	-12	-12	-12	-12	-12	-12	-12
	4	-	9	9	13	9	9	9	9	9	9	9	9	9	9	9	10	10	10
	6	-	22	21	25	21	21	21	21	21	21	21	21	21	21	21	21	21	21
	8	-	30	29	33	29	29	29	29	29	29	29	30	30	30	30	30	30	30
	10	-	36	35	40	35	35	35	35	35	35	36	36	36	36	36	36	36	36
	12	-	41	41	45	40	40	40	40	41	41	41	41	41	41	41	41	41	41
250	2	-	-	-16	-16	-16	-16	-17	-17	-17	-17	-17	-17	-16	-16	-16	-16	-16	-16
	4	-	-	6	6	6	5	5	5	5	5	6	6	6	6	6	6	6	6
	6	-	-	18	18	18	18	18	18	18	18	18	18	18	18	18	19	19	19
	8	-	-	27	26	26	26	26	26	26	26	26	26	27	27	27	27	27	27
	10	-	-	33	33	33	33	33	33	33	33	33	33	33	33	34	34	34	34
	12	-	-	38	38	38	38	38	38	38	38	38	38	39	39	39	39	39	39
300	2	-	-	-	-19	-19	-19	-19	-19	-19	-19	-19	-19	-19	-19	-19	-19	-19	-19
	4	-	-	-	3	3	3	3	3	3	3	3	3	3	4	4	4	4	4
	6	-	-	-	16	16	16	16	16	16	16	16	16	16	16	16	16	16	16
	8	-	-	-	25	25	24	25	25	25	25	25	25	25	25	25	25	25	25
	10	-	-	-	31	31	31	31	31	31	31	31	31	31	31	31	31	32	32
	12	-	-	-	37	37	37	37	37	37	37	37	37	37	37	37	37	37	37

ALNOR® ventilation systems
is a legally protected trademark and technical patent. All rights reserved.

FDA2-12-T / FDA2-12-M

a [mm]	v [m/s]	L_{WA} [dB(A)] b [mm]																	
		160	200	250	300	350	400	450	500	550	600	650	700	750	800	850	900	950	1000
350	2	-	-	-	-	-21	-21	-21	-21	-21	-21	-21	-21	-21	-21	-21	-21	-21	-21
	4	-	-	-	-	2	2	2	2	2	2	2	2	2	2	2	2	2	2
	6	-	-	-	-	15	14	14	14	14	14	14	14	14	14	15	14	15	15
	8	-	-	-	-	24	24	23	24	24	24	24	24	24	24	24	24	24	24
	10	-	-	-	-	30	30	30	30	30	30	30	30	30	30	30	30	30	30
	12	-	-	-	-	35	35	35	35	35	35	35	35	35	35	36	36	36	36
400	2	-	-	-	-	-	-22	-23	-23	-23	-23	-23	-23	-23	-23	-23	-23	-23	-23
	4	-	-	-	-	-	1	0	0	0	0	0	0	0	0	0	0	0	0
	6	-	-	-	-	-	13	13	13	13	13	13	13	13	13	13	14	14	14
	8	-	-	-	-	-	22	22	22	22	22	22	22	22	22	22	22	22	23
	10	-	-	-	-	-	29	29	29	29	29	29	29	30	30	30	30	30	30
	12	-	-	-	-	-	34	34	34	34	34	34	35	35	35	35	35	35	35
450	2	-	-	-	-	-	-	-24	-24	-24	-24	-24	-24	-24	-24	-24	-24	-24	-24
	4	-	-	-	-	-	-	-1	-1	-1	-1	-1	-1	-1	-1	-1	-1	-1	-1
	6	-	-	-	-	-	-	13	13	13	13	13	13	13	13	13	13	13	13
	8	-	-	-	-	-	-	21	21	21	21	21	21	21	21	21	21	21	21
	10	-	-	-	-	-	-	29	28	28	28	29	28	28	29	28	28	28	29
	12	-	-	-	-	-	-	34	34	34	34	34	34	34	34	34	34	34	34
500	2	-	-	-	-	-	-	-	-25	-25	-25	-25	-25	-25	-25	-26	-26	-26	-26
	4	-	-	-	-	-	-	-	-2	-2	-2	-2	-2	-2	-2	-2	-2	-2	-2
	6	-	-	-	-	-	-	-	12	12	12	12	12	12	12	12	12	12	12
	8	-	-	-	-	-	-	-	21	21	21	21	21	21	21	21	21	21	21
	10	-	-	-	-	-	-	-	28	28	28	28	28	28	28	28	28	28	28
	12								34	34	34	34	34	34	34	34	34	34	34

ALNOR® ventilation systems
is a legally protected trademark and technical patent. All rights reserved.

Thermal insulation

ALNOR reserves the right to modify technical specifications in line with the policy of continuous product improvement.

ALNOR® ventilation systems
is a registered trademark protected by a technical patent. All modification rights reserved.

ARMAFLEX/K-FLEX-STDH/INSUL-RXT

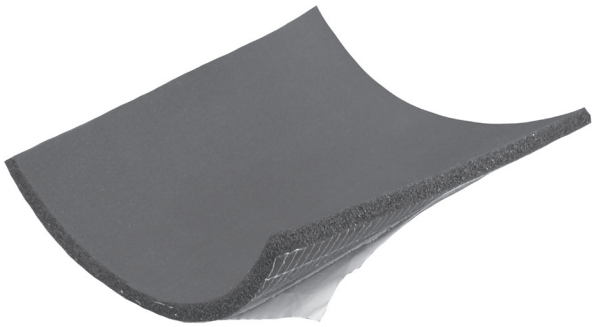

Description

Technical insulation can be used to build sound-proofing or thermal insulation systems. Technical insulation products are made from flexible closed-cell foam based on synthetic rubber. Technical insulation prevents condensation of water steam and reduces energy loss. One side of each insulating mat or sheet has a self-adhesive tape reinforced with a plastic mesh. As a result, installation of technical insulation is efficient, easy and built to last.

Product code example

Product code: **ARMAFLEX-09**

type

Dimensions

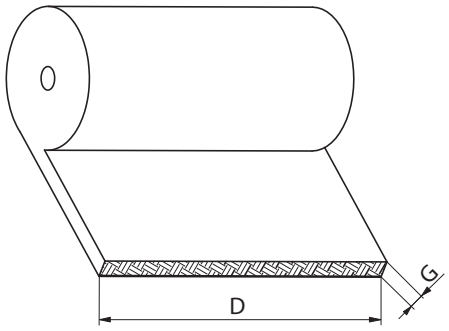

Type	*G (mm)*	*D (mm)*	*Length in roll (m)*
ARMAFLEX-06	6	1000	15
ARMAFLEX-09	9	1000	10
ARMAFLEX-13	13	1000	8
ARMAFLEX-19	19	1000	6
ARMAFLEX-25	25	1000	4
K-FLEX-STDH-06	6	1500	30
K-FLEX-STDH-10	10	1500	20
K-FLEX-STDH-13	13	1500	15
K-FLEX-STDH-16	16	1500	12
K-FLEX-STDH-19	19	1500	10
K-FLEX-STDH-25	25	1500	8
K-FLEX-STDH-30	30	1500	6
INSUL-RXT-06	6	1000	30
INSUL-RXT-09	9	1000	20
INSUL-RXT-13	13	1000	14
INSUL-RXT-16	16	1000	12
INSUL-RXT-19	19	1000	10
INSUL-RXT-25	25	1000	8
INSUL-RXT-32	32	1000	6

Technical specifications

Product code	*Temperature of application T (°C)*	*Thermal conductivity λ (W/mK)*	*Transmission μ*	*Sound insulation (dB)*	*Description*
ARMAFLEX	-50°C to +110°C	0.035	≥ 10000	reduction to 30 dB	synthetic rubber mat w/adhesive layer
K-FLEX-STDH	-40°C to +85°C	0.036	≥ 5000	–	grey synthetic rubber mat w/ adhesive layer
INSUL-RXT	-40°C to +105°C	0.038	≥ 7000	reduction to 30 dB	synthetic rubber mat w/adhesive layer

ALNOR® ventilation systems
is a registered trademark protected by a technical patent. All modification rights reserved.

Insulating rubber mat

FOAM-B



Description

Synthetic rubber mats are suitable for insulating flat and round surfaces as well as square and round ducts. They protect from condensation, provide thermal insulation and deaden noise. The mats are available in different thickness and width sizes. Closed-cell synthetic rubber has low water vapour permeability.

Product code example

Product code: **FOAM-B - 13**

type

thickness

Dimensions

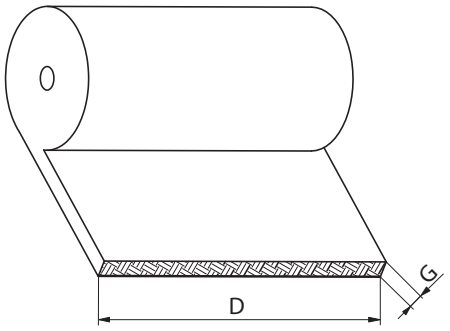

Mat thickness G (mm)	*Roll width D (mm)*	*Quantity m^2/roll*
6	1000	30
9	1000	20
13	1000	14
19	1000	10
25	1000	8
32	1000	6
40	1000	4
50	1000	4

Technical specifications

Parameter	*Standard*	*Value*
Thermal conductivity λ W/(m*K)	EN 12667	0.032 (-20˚C)
		0.034 (0˚C)
		0.036 (+20˚C)
		0.038 (+40˚C)
		0.040 (+60˚C)
Transmission μ	EN 12086	μ ≥ 7000
Temperature range	EN 14706	-40˚C / +85˚C
Fire resistance	EN 13501-1	B-s3, d0

ALNOR® ventilation systems
is a registered trademark protected by a technical patent. All modification rights reserved.

Self-adhesive insulating rubber mat

FOAM-G

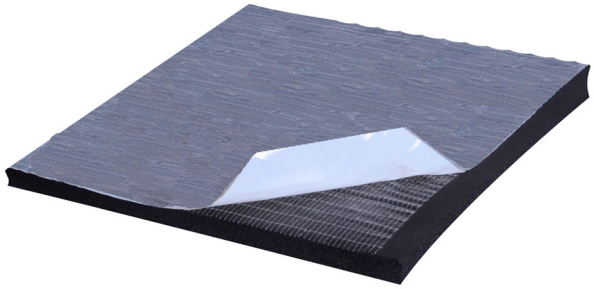

Description

Self-adhesive synthetic rubber mats are suitable for insulating flat and round surfaces as well as square and round ducts. They protect from condensation, provide thermal insulation and deaden noise. The mats are available in different thickness and width sizes. Closed-cell synthetic rubber has low water vapour permeability.

Product code example

Product code: **FOAM-G - 19**

type

thickness

Dimensions

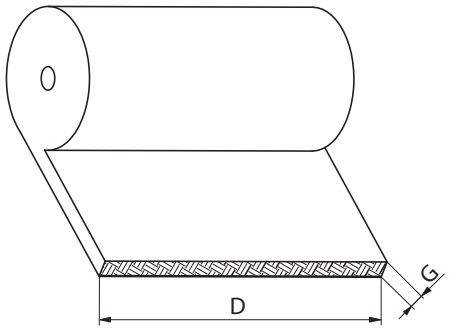

Mat thickness G (mm)	*Roll width D (mm)*	*Quantity m^2/roll*
6	1000	30
9	1000	20
13	1000	14
19	1000	10
25	1000	8
32	1000	6
40	1000	4
50	1000	4

Technical specifications

Parameter	*Standard*	*Value*
Thermal conductivity λ W/(m*K)	EN 12667	0.032 (-20˚C)
		0.034 (0˚C)
		0.036 (+20˚C)
		0.038 (+40˚C)
		0.040 (+60˚C)
Transmission μ	EN 12086	μ ≥ 7000
Temperature range	EN 14706	-40˚C / +85˚C
Fire resistance	EN 13501-1	B-s3, d0

ALNOR® ventilation systems
is a registered trademark protected by a technical patent. All modification rights reserved.

Elastomeric rubber foam with aluminium coating

FOAM-AB / FOAM-AG



Description

Synthetic rubber foam with aluminum coating is used for insulation of flat and cylindrical surfaces such as rectangular and circular ventilation ducts. The foam rubber serves as a thermal insulation to prevent condensation and acoustic insulation. The additional aluminum coating protects against UV radiation. Different thicknesses and widths of rubber foam are available. Elastomeric closed cell insulation has strong water vapor permeability as well as fire resistance class B-s3, d0.

Foam insulation with PVC + Aluminum coating is available on request.

Available materials:
FOAM-AB- ... - rubber foam + ALU foil
FOAM-AG- ... - rubber foam + glue + ALU foil

Product code example
Product code: **FOAM-AG - 19**

type
thickness

Dimensions

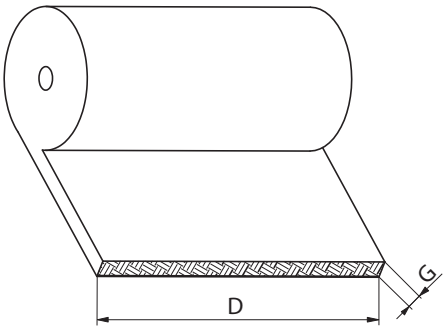

Mat thickness G (mm)	*Roll width D (mm)*	*Quantity m²/roll*
6	1000	30
9*	1000	20
13*	1000	14
19*	1000	10
25	1000	8
32	1000	6
40	1000	4
50	1000	4

Technical specifications

Parameter	*Standard*	*Value*
Thermal conductivity λ W/(m*K)	EN 12667	0.032 (-20˚C)
		0.034 (0˚C)
		0.036 (+20˚C)
		0.038 (+40˚C)
		0.040 (+60˚C)
Transmission μ	EN 12086	μ ≥ 10000
Temperature range	EN 14706	-40˚C / +85˚C
Fire resistance	EN 13501-1	B-s3, d0

ALNOR® ventilation systems
is a registered trademark protected by a technical patent. All modification rights reserved.

Ventilation filters

ALNOR reserves the right to modify technical specifications in line with the policy of continuous product improvement.

ALNOR® ventilation systems
is a registered trademark protected by a technical patent. All modification rights reserved.

Ventilation filters

TECHNICAL INFORMATION

System description

The ALNOR duct filters complement ventilation ductwork systems. A wide range of types and versions allows adapting the filter solution to virtually all design requirements.

Dimensions

All round duct filters and box connection styles match the SPIRAL®system round fittings. Square duct filters need to be adjusted to the dimensions of the existing ductwork and fittings. Other sizes are shown in the tables and specifications in the individual Product Data Sheets.

Installation instructions

Round duct filters are fastened with self-drilling screws or blind rivets, either of which is driven through the ductwork length overlapping the connection flange inside. Square duct filters are fastened with screws at the steel corner straps and with the KQL G-clamp which fastens two flange frames.

Application advantages

Filters prevent contaminants from flowing with the air supplied into rooms and ventilation ductwork. This helps operate a ventilation system which provides air treated to high hygiene standards while improving the service life of ventilation equipment. The filter elements are easy to replace both in round and square duct filters, providing superior convenience of operation and servicing.

Marking

ALNOR products carry the Polish conformity mark B for construction products and product codes as shown in the technical specifications listed in this catalogue.

ALNOR® ventilation systems
is a registered trademark protected by a technical patent. All modification rights reserved.

Anti-smog electrostatic precipitator

e-MOCarz



Description

Electrostatic precipitator e-MOCarz was design for residential buildings. Compact size and exceptionally low pressure drop makes it suitable for residential heat recovery systems, with little impact on system performance. **The filtration efficiency of ePM1 and ePM2.5 particles, the main component of smog, is as high as 95%**.
Polluted air initially passes through a steel mesh pre-filter (which retains larger fractions), then is positively ionized in an electric field due to the "crown discharge" effect. In the last stage, the previously charged particles, are pulled by electrostatic force toward horizontally mounted aluminium plates (electrodes) and build up on their surface.
Electrostatic filters (precipitators) have low power consumption (only few Watts), long service life and most of all there's **no need to exchanged dirty (clogged) filters**. It is enough to clean in with water and detergent once or twice a year. There is a led status indicator on the casing.

Available accessories:

e-MOCarz-W	- renewable electrostatic filter, included in the set
e-MOCarz-ION	- Ionizing module, additionally sterilizing and revitalizing air
e-MOCarz-CA	- Activated carbon module, additional filtration of odors
e-MOCarz-PR-160	- round Ø160 connector
e-MOCarz-PR-200	- round Ø200 connector
e-MOCarz-PR-250	- round Ø250 connector

Note!
e-MOCarz has a square connection 345x385mm. Choose correct reducers for your circural ducting.

Product code example
Product code: e-**MOCarz**

type _____

Dimensions

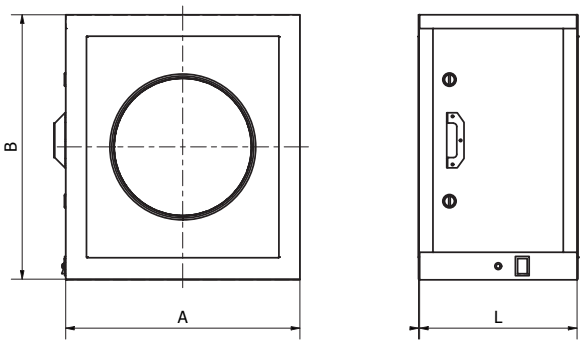

A [mm]	B [mm]	L [mm]
340	385	230

e-MOCarz-W

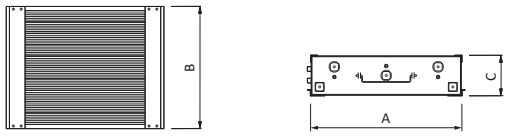

A [mm]	B [mm]	C [mm]
325	283	105

e-MOCarz-CA

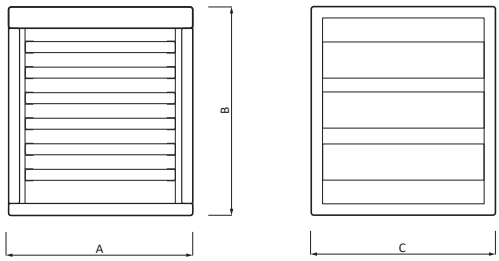

A [mm]	B [mm]	C [mm]
345	385	345

e-MOCarz-ION

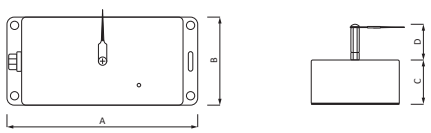

A [mm]	B [mm]	C [mm]	D [mm]
130	60	30	25

ALNOR® ventilation systems
is a registered trademark protected by a technical patent. All modification rights reserved.

Anti-smog electrostatic precipitator

e-MOCarz

Accessories

e-MOCarz-W
Renewable electrostatic filter, included in the set.



Mounting strips (included)
Facilitates device suspension.

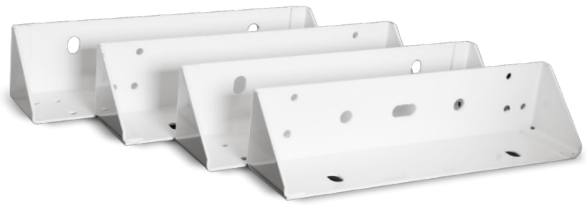

e-MOCarz-CA (optional)
Module with six cartridges with active carbon for even more accurate air purification (including odors).



e-MOCarz-ION (optional)
Ionizing module, additionally sterilizing and revitalizing air.



e-MOCarz-PR-160 /200 /250 (optional)
Round conectors: Ø160, Ø200 and Ø250 mm.



ALNOR® ventilation systems
is a registered trademark protected by a technical patent. All modification rights reserved.

Anti-smog electrostatic precipitator

e-MOCarz

Technical data

Model	*Max air flow [m³/h]**	*Max filtration efficiency acc. to EN ISO 16890*	*Power [W]*	*Weight [kg]*
e-MOCarz	720	ePM1 95%	9	11

*for tested filtration efficiency

Filtration efficiency for different air flows and air velocity (according to ISO 16890)

ePM1 95% *ePM2.5 95%*	*ePM1 95%* *ePM2.5 95%*	*ePM1 90%* *ePM2.5 95%*	*ePM1 80%* *ePM2.5 90%*
180 m³/h	360 m³/h	540 m³/h	720 m³/h
1 m/s	2 m/s	2.5 m/s	3 m/s

Pressure drop and filtration efficiency diagrams:

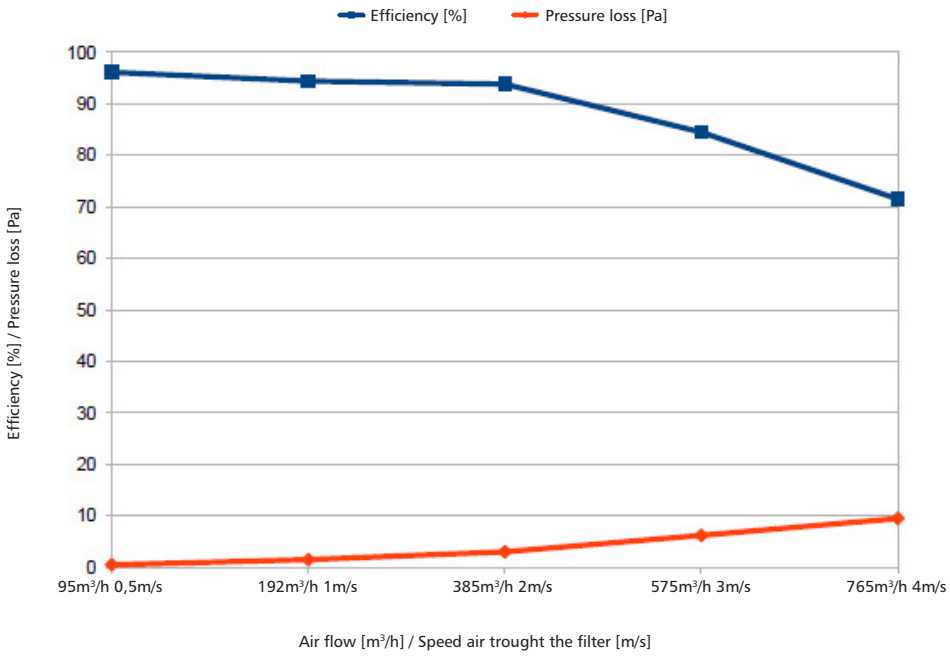

ALNOR® ventilation systems
is a registered trademark protected by a technical patent. All modification rights reserved.

Smog duct filter

MOCarz / MOCarz-CA



Description

The smog filter is designed for effective filtration of the so-called particulate matter. The PM2.5 and PM10 particles are the main component of smog, which have an optical diameter of 2.5 and 10 μm (micrometers). The filtration efficiency (removal) of PM2.5 particles reaches up to 73%, and PM10 particles up to 81% (according to tests carried out with a dust particle measuring device). The smog duct filter consists of a sealed filter box and two filters: prefilter and smog filter.
It is recommended to install a smog filter on the supply ducts in domestic ventilation and heat recovery systems.
In the MOCarz-CA version prefilter I3 was replaced by an activated carbon prefilter (or activated charcoal). The main purpose of using such a material is deodorization of air and preliminary cleaning of dust and gaseous pollutants. Activated carbon has a huge adsorption surface, which effectively "binds" on its surface particles of pollutants, bacteria, hydrocarbons.

Filter replacement (filter set for 1 filter box):
FSBQ-I3 - prefilter
FSBQ-W-CA - prefilter with activated carbon ISO Coarse 75%
MOCarz-W - proper filter - ISO ePM1 80% (EN-ISO 16890)

Available materials - Product code examples
MOCarz-...- galvanized steel sheet

Product code example
Product code **MOCarz - 160**

type
Ød

Dimensions

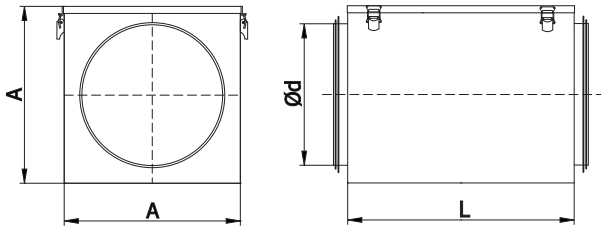

Kod	Ød [mm]	A [mm]	L [mm]
MOCarz-100 / MOCarz-CA-100	100	160	290
MOCarz-125 / MOCarz-CA-125	125	180	290
MOCarz-160 / MOCarz-CA-160	160	210	290
MOCarz-200 / MOCarz-CA-200	200	250	290
MOCarz-250 / MOCarz-CA-250	250	300	290
MOCarz-315 / MOCarz-CA-315	315	360	290

Air quality index

The AQI is an index for reporting daily air quality. It tells you how clean or polluted your air is, and what associated health effects might be a concern for you. EPA calculates the AQI for five major air pollutants regulated by the Clean Air Act amongst them particle pollution (also known as particulate matter).

Air quality index	PM2,5 [μg/m³]	PM10 [μg/m³]
Very good	0-12	0-20
Good	13-36	21-60
Moderate	37-60	61-100
Unhealthy for sensitive groups	61-84	101-140
Unhealthy	85-120	141-200
Very unhealthy	>120	>200

The measurements carried out (by ALNOR) indicate that the installation of the MOCarz filter allows to achieve at least a good air quality level for the supply air. The filtration result may be different for more polluted areas.

ALNOR® ventilation systems
is a registered trademark protected by a technical patent. All modification rights reserved.

Smog duct filter

MOCarz / MOCarz-CA

Air quality level	*Cautionary statement*
Very good	Air quality is very good, air pollution does not pose a threat to health, very favorable conditions for any outdoor activity, without limitations.
Good	Air quality is considered satisfactory, and air pollution poses little or no risk. The outdoor activity can be carried out without limitations.
Moderate	Air pollution can have health effect for sensitive groups (e.g. sick people, the elderly, pregnant women and young children). Moderate conditions for outdoor activities.
Unhealthy for sensitive groups	Air quality is sufficient, air pollution is a health hazard (especially for the sick, elderly, pregnant women and small children) and may have negative health effects. Consider restricting (shortening or staggering over time) outdoor activities, especially if this activity requires prolonged or increased physical activties, especially if this activity requires prolonged or increased physical activity.
Unhealthy	Air quality is bad, the sick and the elderly, pregnant women and young children should avoid being outdoors. The remaining population should minimize any physical activity in the open air - especially requiring prolonged or increased physical exertion.
Very unhealthy	Air quality is very bad and has a negative impact on health. Sick and elderly people, pregnant women and young children should absolutely avoid being outdoors. The remaining population should limit being in the open air to the necessary minimum. All physical activities outside are discouraged. Long-term exposure to substances in the air increases the risk of changes, among others in the respiratory, cardiovascular and immune systems.

Assemebly

In the case of the filter box installation in the existing ventilation system, it is recommended to use the SMSFL coupling. The diameter of the filter should match the supply duct diameter and then follow instructions below (min. 50 cm duct section):



1. Cut off 38 cm long duct section.



2. Insert SMSFL coupling into the duct.

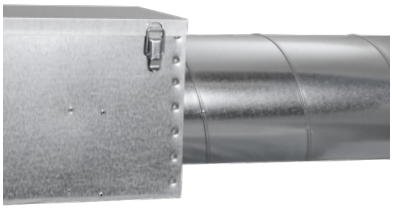

3. Install the filter box on the opposite duct hole.



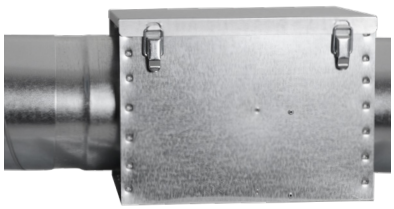

4. Insert the SMSFL coupling. Use WGO self-drilling screws to secure the installation.

ALNOR® ventilation systems
is a registered trademark protected by a technical patent. All modification rights reserved.

Smog duct filter

MOCarz / MOCarz-CA

Technical data

Pressure loss chart for **MOCarz-100 / MOCarz-CA-100**

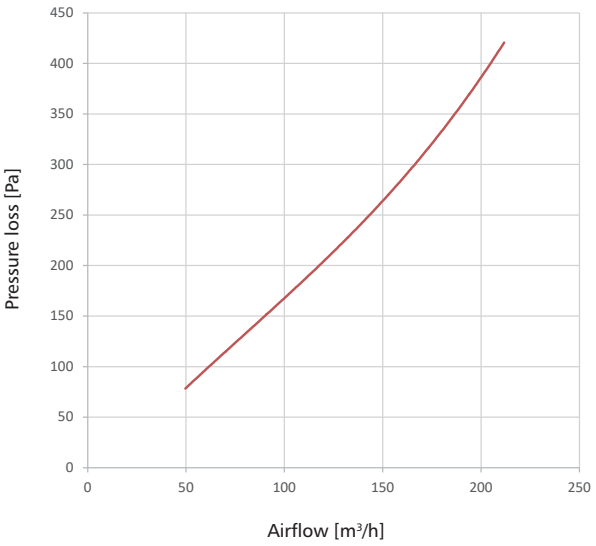

Pressure loss chart for **MOCarz-125 / MOCarz-CA-125**

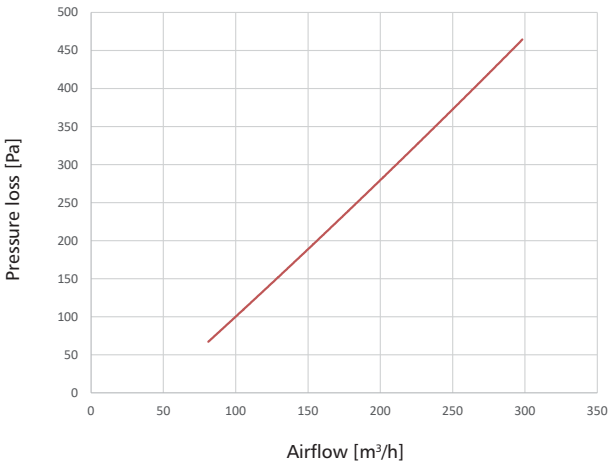

Pressure loss chart for **MOCarz-160 / MOCarz-CA-160**

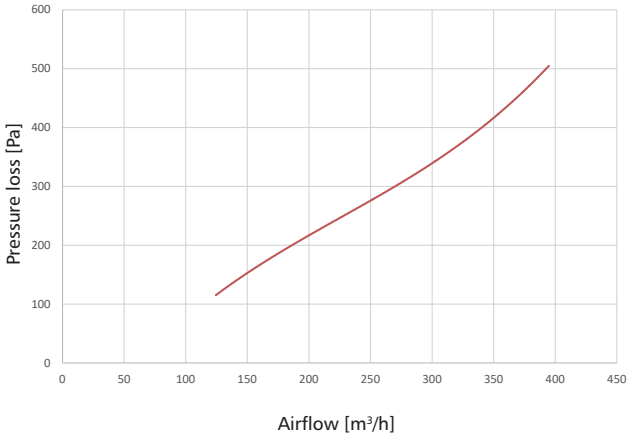

Pressure loss chart for **MOCarz-200 / MOCarz-CA-200**

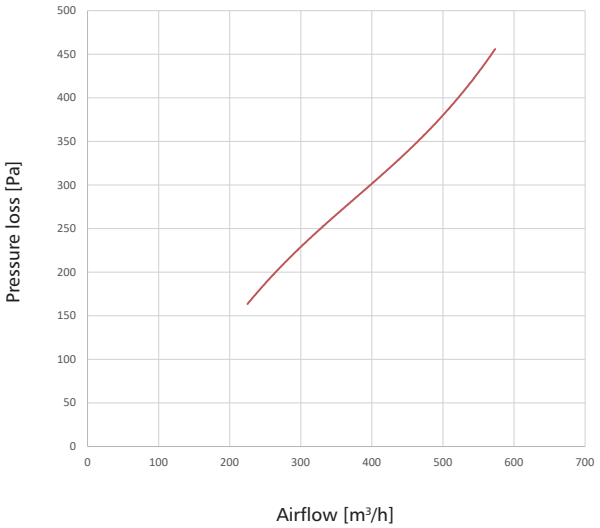

Pressure loss chart for **MOCarz-250 / MOCarz-CA-250**

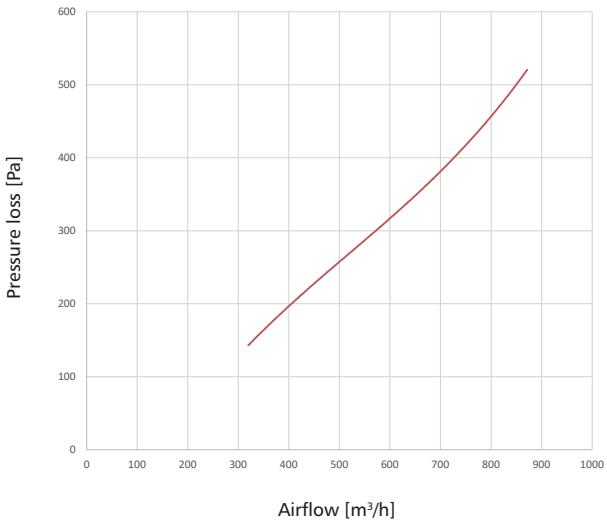

Pressure loss chart for **MOCarz-315 / MOCarz-CA-315**

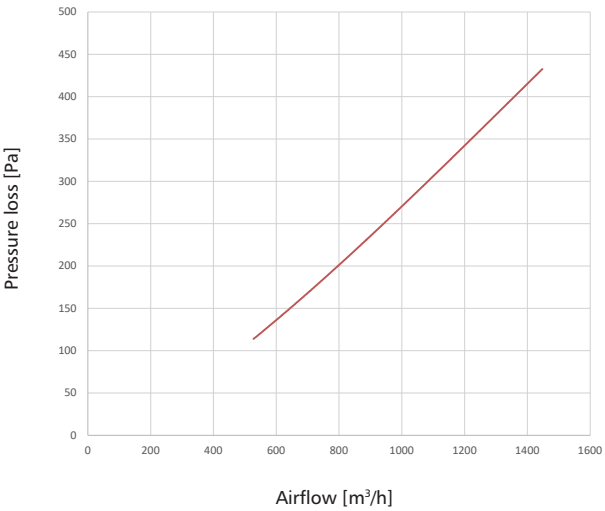

ALNOR® ventilation systems
is a registered trademark protected by a technical patent. All modification rights reserved.

Duct filters

UFI



Description

UFI duct filters are designed for filtering air flowing through round ducts. The filter is provided with a class EU4 filter element secured with a galvanized steel wire mesh on both sides. The housing is made of a round, galvanized sheet duct piece with the connection ends sealed with gaskets. The dedicated design of the UFI duct filters allows easy replacement of the filter element. The UFI duct filters are designed for installation between the mating ends of two round ducts in the standard diameter range (100-400 mm).

Available materials — Product code examples
UFI-.. - galvanized steel sheet
UFI-K-... - 1.4301 / 304 stainless steel sheet

Product code example
Product code: **UFI - 160**

type
Ød

Dimensions

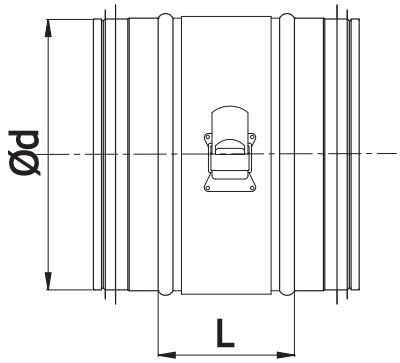

Type	*Ød [mm]*	*L [mm]*
100	100	70
125	125	70
160	160	70
200	200	70
250	250	70
315	315	70
355	355	70
400	400	70

ALNOR® ventilation systems
is a registered trademark protected by a technical patent. All modification rights reserved.

Duct filters

UFI

Technical specifications

Pressure loss chart

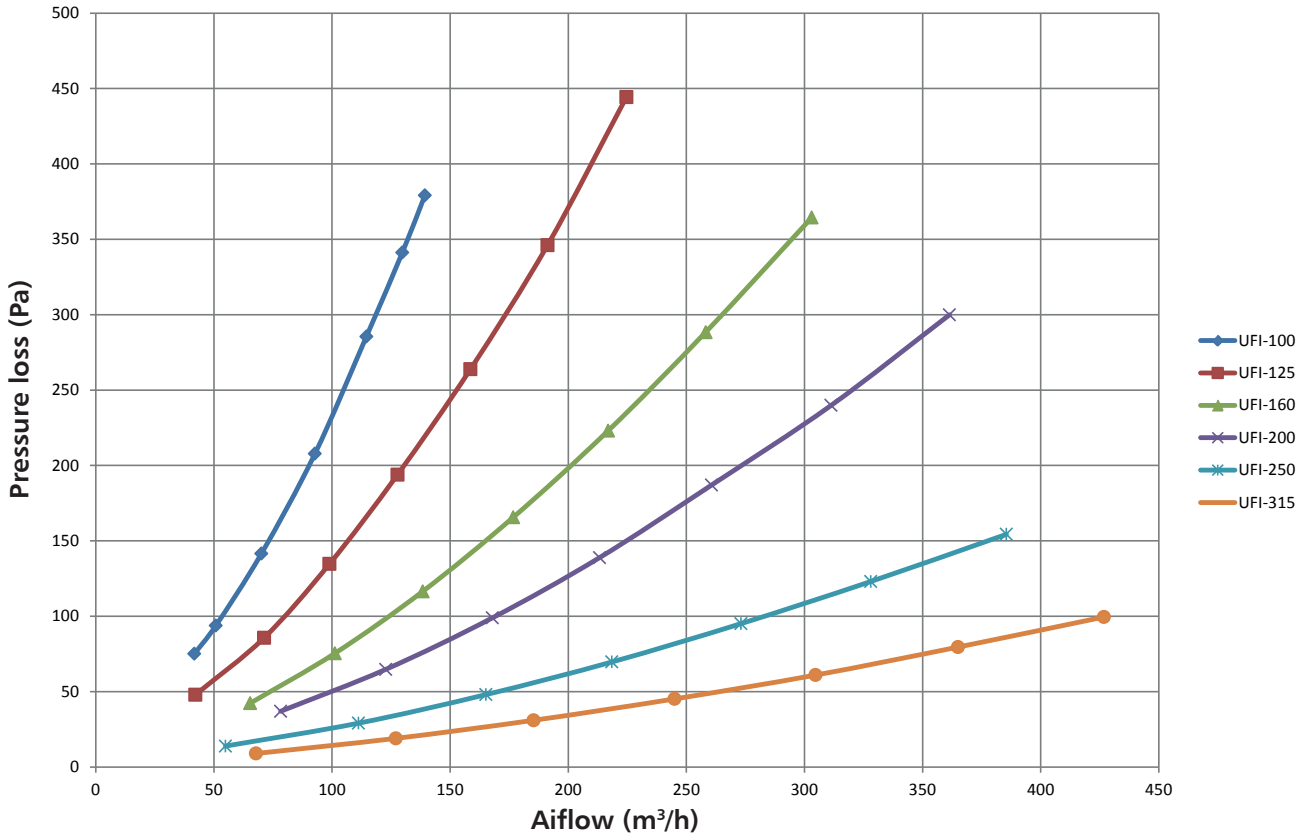

ALNOR® ventilation systems
is a registered trademark protected by a technical patent. All modification rights reserved.

Filter elements

UFI-W



Description

UFI-W is a class EU4 filter element designed for filtering air flowing through round ducts. It is protected with a 1 mm wire mesh of galvanized steel on both sides. The mesh size is 1x1 mm on one side and 10x10 mm on the other. The filter element casing is a 20 mm tall round duct piece. The UFI-W filter elements are replaceable components of UFI duct filters.

Available materials — Product code examples
UFI-W-.. - galvanized steel sheet
UFI-W-K-... - 1.4301 / 304 stainless steel sheet

Product code example
Product code: **UFI-W - 160**

type
Ød

Dimensions

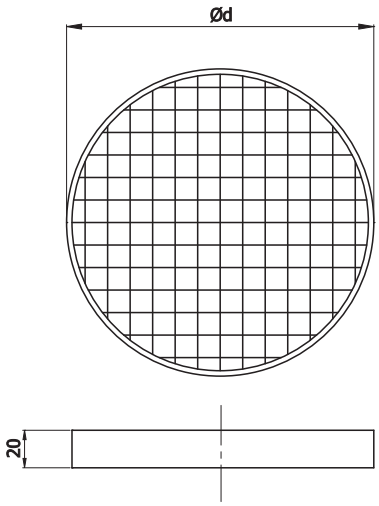

Type	*Ød [mm]*
UFI-W-100	100
UFI-W-125	125
UFI-W-160	160
UFI-W-200	200
UFI-W-250	250
UFI-W-315	315
UFI-W-355	355
UFI-W-400	400

ALNOR® ventilation systems
is a registered trademark protected by a technical patent. All modification rights reserved.

Duct filters

F-STR



Dimensions

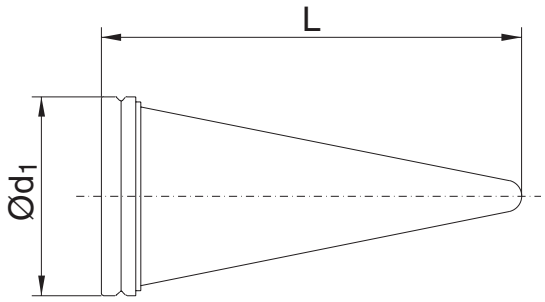

Ød nom (mm)	L (mm)	Surface area (m³)	Weight (kg)
100	220 +/- 20	0.04	0.03
125	260 +/- 20	0.05	0.05
160	340 +/- 20	0.08	0.09
200	420 +/- 25	0.13	0.13
250	540 +/- 30	0.22	0.21
315	670 +/- 30	0.36	0.33
400	960 +/- 35	0.55	0.54
500	1100 +/- 50	0.69	0.96
630	1350 +/- 50	1.37	1.34

Description

F-STR duct filters are designed for installation at the point of connection between round ducts and ventilation fittings. The conical filter element form provides better filtration efficiency and reduces the pressure loss across the filter.
The standard filtration class is EU4 or EU5.
The maximum operating temperature is 120°C.

Maximum recommended flow velocity:
class EU3 — V = 14 m/s
class EU4 — V = 10 m/s
class EU5 — V = 4.5 m/s

Product code example
Product code: **F-STR - aaa - E4**

type
Ød
filtration class

ALNOR® ventilation systems
is a registered trademark protected by a technical patent. All modification rights reserved.

Technical specifications

Pressure loss:
It is highly recommended that the total final pressure loss should be set at: $P_k = 1.5P_t$ — check the value of P^t in the charts below.

EU3 filtration class

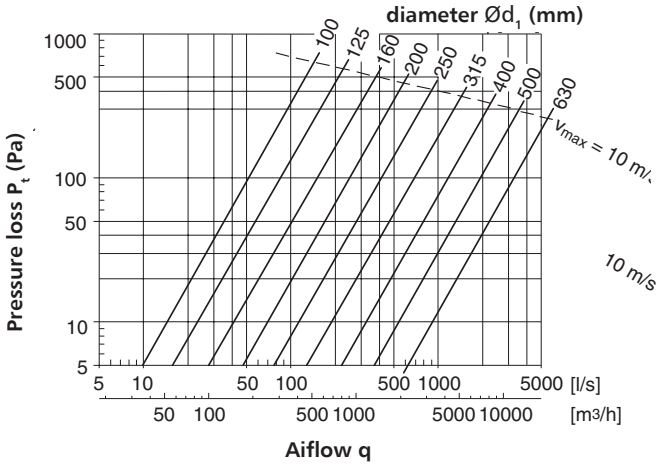

EU4 filtration class

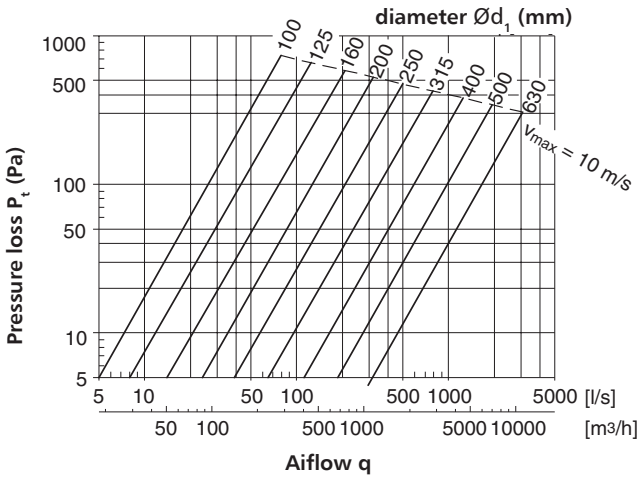

EU5 filtration class

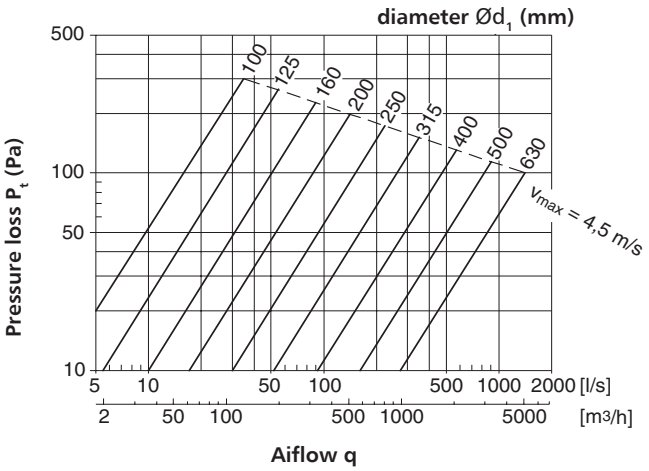

ALNOR® ventilation systems
is a registered trademark protected by a technical patent. All modification rights reserved.

Filter boxes

FSBQL



Description

The FSBQL duct filters are designed for filtering air flowing through round ducts in the standard diameter range of 100-500 mm.
The FSBQL duct filter casing is a galvanized steel sheet box with a top closure fastened with clasps. The box features connectors with EPDM gaskets. The dedicated design of the FSBQL duct filters allows easy replacement of the filter element.
The FSBQL duct filters can be provided with class EU3 and EU5 filter elements. Optional filter elements include the FSBQ-I framed filter elements and the FSBQ-W pleated filter elements provided with a filter element mat protected with a galvanized steel wire mesh.
The FSBQL duct filters can be manufactured on request with the FSBQ-UC4 activated carbon filter elements.

Available materials — Product code examples
FSBQL-.. - galvanized steel sheet
FSBQL-K-... - 1.4301/304 stainless steel

Product code example
Product code: **FSBQL - aaa**

type
Ød

Dimensions

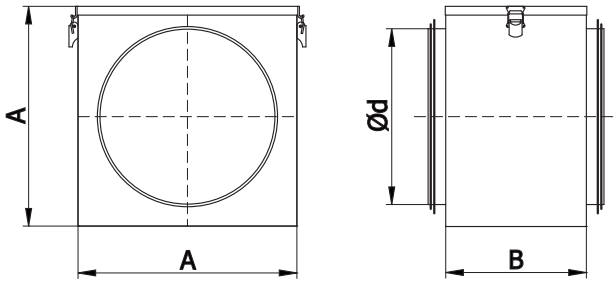

Type	*Ød [mm]*	*AxA [mm]*	*B [mm]*
FSBQL-100	100	160	160
FSBQL-125	125	180	160
FSBQL-150	150	210	160
FSBQL-160	160	210	160
FSBQL-200	200	250	160
FSBQL-250	250	300	160
FSBQL-315	315	360	160
FSBQL-355	355	400	160
FSBQL-400	400	450	160
FSBQL-450	450	500	160
FSBQL-500	500	550	160

ALNOR® ventilation systems
is a registered trademark protected by a technical patent. All modification rights reserved.

Technical specifications

Pressure loss chart

FSBQL-100

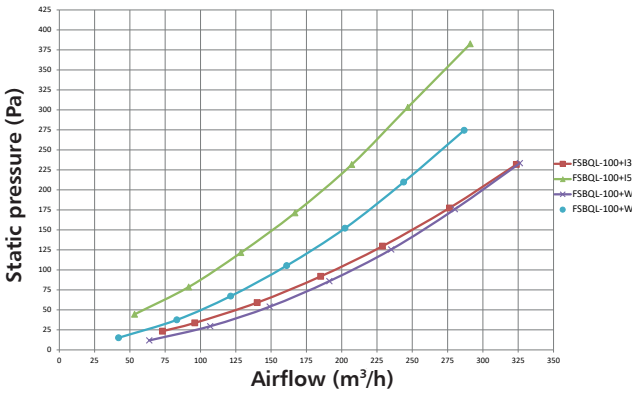

FSBQL-125

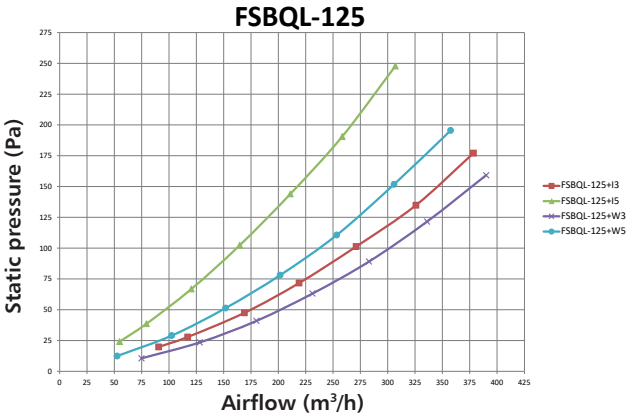

FSBQL-160

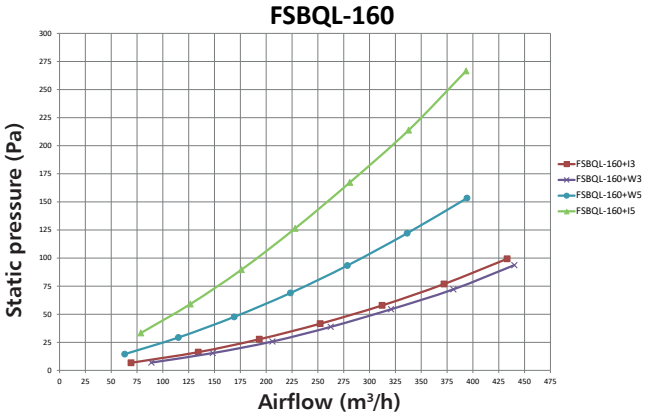

FSBQL-200

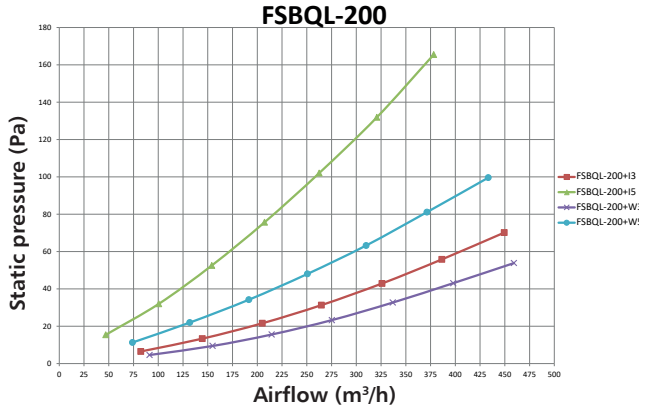

FSBQL-250

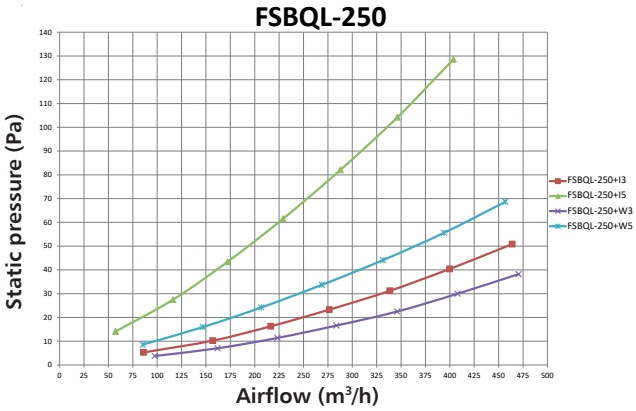

FSBQL-315

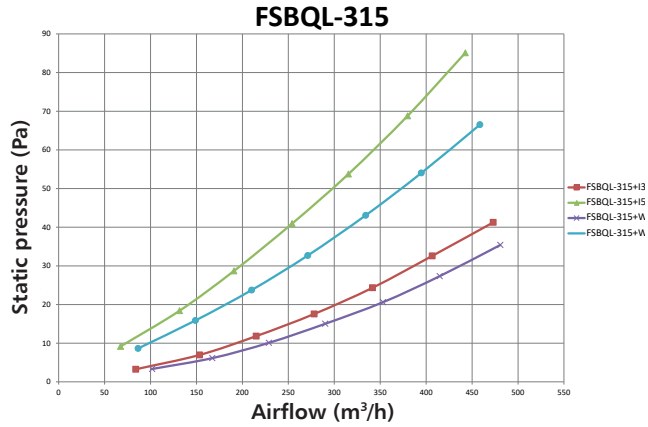

ALNOR® ventilation systems
is a registered trademark protected by a technical patent. All modification rights reserved.

Filter elements

FSBQ-I



Description

The FSBQ-I filter elements are designed for use in the FSBQL duct filters. The design of this filter element is very simple: the filter element mat is sewn over a steel wire frame. The FSBQ-I filter elements are available in filtration classes EU3 and EU5. The filter elements can be fabricated on request with an activated carbon mat rated at EU4.
All filter elements are wrapped in protective plastic film which must be removed before installation.

Available materials — Product code examples
FSBQ-I3-.. - galvanized steel sheet
FSBQ-I3-K-... - 1.4301/304 stainless steel sheet

Product code example
Product code: **FSBQL - aa - bbb**

type
filtration class
Ød

Technical specifications

FSBQ-I3 class EU3 filter element
(for 5400 $m^3/h/m^2$)
Initial resistance: 40 Pa
Final resistance: 200-250 Pa

FSBQ-I5 class EU5 filter element
(for 900 $m^3/h/m^2$)
Initial resistance: 45 Pa
Final resistance: 450 Pa

Dimensions

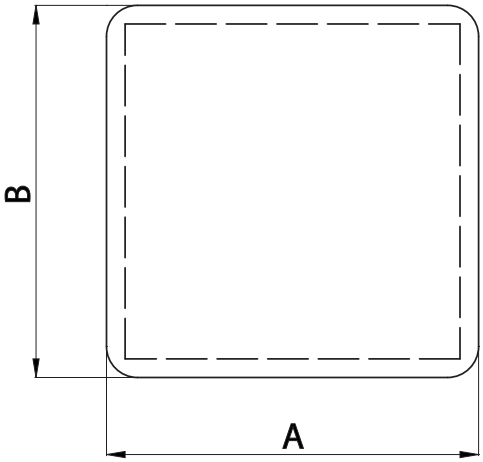

Type	A [mm]	B [mm]	Filtration class
FSBQ-I3-100	204	160	EU3
FSBQ-I5-100	204	160	EU5
FSBQ-I3-125	220	180	EU3
FSBQ-I5-125	220	180	EU5
FSBQ-I3-150	244	210	EU3
FSBQ-I5-150	244	210	EU5
FSBQ-I3-160	244	210	EU3
FSBQ-I5-160	244	210	EU5
FSBQ-I3-200	278	250	EU3
FSBQ-I5-200	278	250	EU5
FSBQ-I3-250	324	300	EU3
FSBQ-I5-250	324	300	EU5
FSBQ-I3-315	380	360	EU3
FSBQ-I5-315	380	360	EU5
FSBQ-I3-350	418	400	EU3
FSBQ-I5-350	418	400	EU5
FSBQ-I3-400	464	450	EU3
FSBQ-I5-400	464	450	EU5
FSBQ-I3-450	513	500	EU3
FSBQ-I5-450	513	500	EU5
FSBQ-I3-500	563	550	EU3
FSBQ-I5-500	563	550	EU5

ALNOR® ventilation systems
is a registered trademark protected by a technical patent. All modification rights reserved.

Filter elements

FSBQ-W



Description

The FSBQ-W filter elements are designed for use in the FSBQL duct filters. The filter elements are made of pleated filter element mats and reinforced with a steel wire mesh. The FSBQ-W filter elements are available in filtration classes EU3 and EU5. All filter elements are wrapped in protective plastic film which must be removed before installation.

Product code example

Product code: **FSBQ-W - aa - bbb**

type
filtration class
Ød

Technical specifications

FSBQ-W3 class EU3 filter element
(for 5400 $m^3/h/m^2$)
Initial resistance: 40 Pa
Final resistance: 200-250 Pa

FSBQ-W5 class EU5 filter element
(for 900 $m^3/h/m^2$)
Initial resistance: 45 Pa
Final resistance: 450 Pa

Dimensions

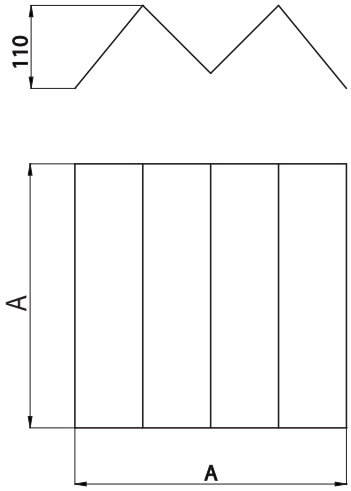

Type	*A [mm]*	*Filtration class*
FSBQ-W3-100	160	EU3
FSBQ-W5-100	160	EU5
FSBQ-W3-125	180	EU3
FSBQ-W5-125	180	EU5
FSBQ-W5-150	210	EU3
FSBQ-W5-150	210	EU5
FSBQ-W3-160	210	EU3
FSBQ-W5-160	210	EU5
FSBQ-W3-200	250	EU3
FSBQ-W5-200	250	EU5
FSBQ-W3-250	300	EU3
FSBQ-W5-250	300	EU5
FSBQ-W3-315	360	EU3
FSBQ-W5-315	360	EU5
FSBQ-W3-350	400	EU3
FSBQ-W5-350	400	EU5
FSBQ-W3-400	450	EU3
FSBQ-W5-400	450	EU5
FSBQ-W3-450	500	EU3
FSBQ-W5-450	500	EU5
FSBQ-W3-500	550	EU3
FSBQ-W5-500	550	EU5

ALNOR® ventilation systems
is a registered trademark protected by a technical patent. All modification rights reserved.

Cartridge filters

FSCQ



Description

The FSCQ cartridge filters are designed for filtering air flowing through square ducts. The casing of each FSCQ cartridge filter is the square duct in which it is installed. The cartridge filter is inserted into the square duct from above, and then locked and sealed in place with clasps.
This design of the FSCQ cartridge filter allows easy replacement of the filter element. The filter element is made of a pleated filter element mat protected by a galvanized steel wire mesh. The FSCQ cartridge filters can be provided with class EU3/G3, EU4/G4, EU5/G5, and EU6/G6 filter elements. Optional filter elements include versions for separation of grease fumes and oil mist vapour. The cartridge filters are available in aluminium, galvanized steel or stainless steel for long service life and regenerability.
The filter element is 30 mm thick; 50 mm thick filter elements are available on request.

Available categories of filter elements:
3 — class EU3/G3 filter element
4 — class EU4/G4 filter element
5 — class EU5/G5 filter element
6 — class EU6/G6 filter element
T — oil and grease filter element

Available materials — Product code examples
FSCQ-...-...-... — galvanized steel sheet

Product code example
Product code: **FSCQ - a - bbb - ccc**

type
filter element
width A
height B

Dimensions

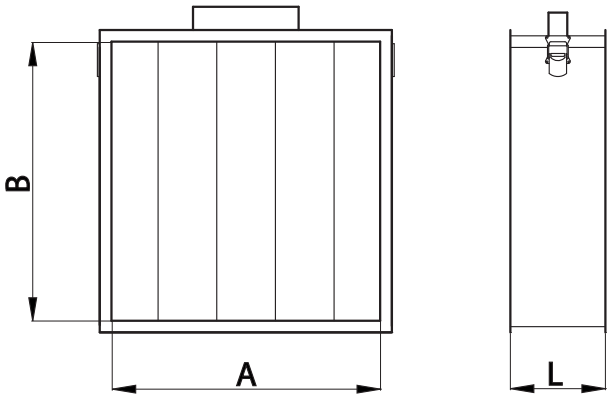

All filters have a fixed casing of length L = 140 mm.
Filters are available in any size on request.

Dane techniczne

FSCQ class EU3/G3 cartridge filter
(for 5400 $m^3/h/m^2$)
Initial resistance: 40 Pa
Final resistance: 200-250 Pa

FSCQ class EU5/G5 cartridge filter
(for 900 $m^3/h/m^2$)
Initial resistance: 45 Pa
Final resistance: 450 Pa

ALNOR® ventilation systems
is a registered trademark protected by a technical patent. All modification rights reserved.

Pocket filters

FSQ



Description

The FSCQ pocket filters are designed for filtering air flowing through square ducts. The casing of each FSQ pocket filter is the square duct in which it is installed. The pocket filter is inserted into the square duct, and then locked and sealed in place with clasps.
This design of the FSQ cartridge filter allows easy replacement of the filter element. The FSQ pocket filters can be provided with class EU3 or EU5 filter elements.

Filters are available in any size on request. Filter of length L = 400 mm for class EU3 elements and L = 550 for class EU5 elements.

Available categories of filter elements:
3 — class EU3/G3 filter element
5 — class EU5/G3 filter element

Available materials — Product code examples
FSQ-...-...-... — galvanized steel sheet
FSQ-K-...-...-... — 1.4301/304 stainless steel sheet
Product code example
Product code: **FSQ - a - bbb - ccc**

type
filter element
width A
height B

Dimensions

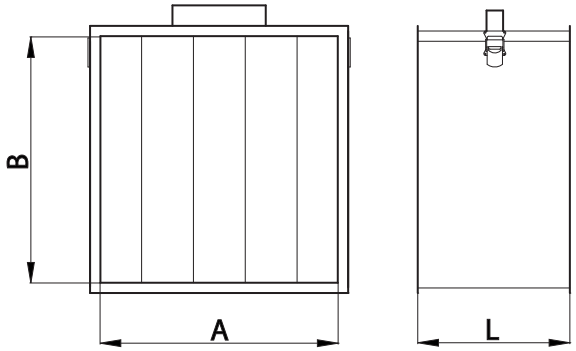

Filters are available in any size on request.
Filter of length L = 400 mm for class EU3 elements and L = 550 for class EU5 elements.

Technical specifications

FSQ class EU3 pocket filter
(for 5400 $m^3/h/m^2$)
Initial resistance: 40 Pa
Final resistance: 200-250 Pa

FSQ class EU5 pocket filter
(for 900 $m^3/h/m^2$)
Initial resistance: 45 Pa
Final resistance: 450 Pa

ALNOR® ventilation systems
is a registered trademark protected by a technical patent. All modification rights reserved.

Download Wentyle
Download AlnorCAM
B2B ordering

Rectangular ducts and fittings

ALNOR reserves the right to modify technical specifications in line with the policy of continuous product improvement.

ALNOR® ventilation systems
is a registered trademark protected by a technical patent. All modification rights reserved.

System description

This is ALNOR's range of rectangular ducts and fittings for ventilation systems.
This catalogue presents the rectangular ducts and fittings sized in accordance with **EN 1505:2001**, "Ventilation for buildings. Sheet metal air ducts and fittings with rectangular cross-section. Dimensions" and reference standards.
The surface area of ventilation ducts and fittings is measured according to **DIN 18379**, "German construction contract procedures – Part C: General technical specifications for building works – Room ventilation systems". Rectangular ducts and fittings are designed for low- and medium-pressure indoor HVAC systems. Rectangular ducts and fittings made from stainless steel or aluminium are available on request if a higher corrosion protection level is required. Alnor also fabricates custom fittings to individual design requirements.

Dimensions

The nominal size is a conventional dimension used to designate and calculate straight ducts and fittings. It is the internal dimension of sides a and b, where side a is exposed to view (see Fig. 1). The length sizes of the sides at a smaller end of an adapter fitting are designated c and d, where side c is exposed to view.
Dimension L is the effective length of a straight duct, which is added to the overall length of the ductwork system.
Dimension l is the effective length of a fitting, which is added to the overall length of the ductwork system.

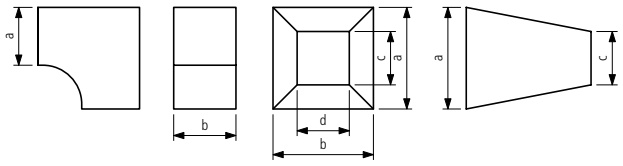

The standard dimensions of ducts and fittings range between 130 mm and 2500 mm for any side length. The ducts and fittings below and above these sizes are available on request. Measurements of the surface area and the lead time for custom ductwork orders are subject to separate arrangements.

Tightness

Ducts are made in two air tightness classes according to **PN-B-76001**, "Ventilation ducts. Air tightness, requirements and testing" and **EN 1507**, "Ventilation for buildings. Sheet metal air ducts with rectangular section. Requirements for strength and leakage":
Air tightness class A: standard in normal design versions;
Air tightness class B: design versions with improved air tightness.

The air tightness classes are specified in the table below.

Duct air tightness class	*Leakage rate limit value* (f_{max}) $m^3s^{-1}m^{-2}$	*Limit values of static pressure* (p_s) *Pa*			
		Vacuum pressure in each class	*Overpressure in each class*		
			1	*2*	*3*
A	$0.027 \times p_{test}^{0.65} \times 10^{-3}$	200	400		
B	$0.009 \times p_{test}^{0.65} \times 10^{-3}$	500	400	1000	2000
C	$0.003 \times p_{test}^{0.65} \times 10^{-3}$	750	400	1000	2000
D*	$0.001 \times p_{test}^{0.65} \times 10^{-3}$	750	400	1000	2000

Special-purpose ventilation ducts

Design

Rectangular ducts and fittings are fabricated from metal sheets which are hemmed and seamed, pressure-welded, or riveted. The ducts and fittings are available in low- and medium-pressure versions (min. vacuum / max. overpressure):
- class N design (low-pressure design): standard design from -400 Pa to +1000 Pa
- class S design (medium-pressure design): from -1000 Pa to 2500 Pa

The dimensional tolerances and metal sheet thickness are selected according to the following criteria:
- length of the long side of a straight duct,
- the dimension of the longest side of the connection cross-section of the fitting.

Table 1 (see below) provides dimensional tolerances and minimum metal sheet thickness sizes.

Dimension of the long side (mm)	*Dimensional tolerance for the duct side (mm)*	*Class N minimum sheet thickness (mm)*	*Class S minimum sheet thickness (mm)*
100-500	0-4	0.6	0.7
501-1000	0-4	0.8	0.9
1001-2000	0-4	1.0	1.1
2001-4000	0-5	1.1	1.2

Rectangular ducts and fittings can be fabricated from stainless steel sheet or aluminium sheet on request (see Table 2).

Dimension of the long side (mm)	*Stainless steel sheet*	*Aluminium sheet*
100-500	0.6	0.8
501-1000	0.6	0.8
1001-2000	0.8	1.0

ALNOR® ventilation systems
is a registered trademark protected by a technical patent. All modification rights reserved.

SQUER

TECHNICAL INFORMATION

System description

The length L tolerance for straight ducts is ±0.005 L.
The angular tolerance is ±2°.
Deviations from dimensions a, b, c, d, e, and f are 0-4 mm.

Dimensions for ducts, including the corresponding cross-sectional area A_c, hydraulic diameter d_h, equivalent diameter d_e, and surface area of 1-metre long duct A_l are listed in Table 3.

Table 3 (see below)
The dimensions and values applicable to ventilation ducts meet the requirements of EN 1505 "Ventilation for buildings. Sheet metal air ducts and fittings with rectangular cross-section. Dimensions".

Marking

ALNOR products carry the Polish conformity mark B for construction products and product codes as shown in the technical specifications listed in this catalogue.

Rectangular ducts and fittings are certified for compliance with hygiene standards:
a) made from aluminium sheet:
HK/B/1652/03/2007
b) made from galvanized or stainless steel sheet:
HK/B/1652/01/2007

Side length (mm)	*100*	*150*	*200*	*250*	*300*	*400*	*500*	*600*	*800*	*1000*	*1200*	
200	0.02	0.03	0.04									A_c
	133	171	200									d_h
	149	186	218									d_e
	0.6	0.7	0.8									A_l
250	0.025	0.038	0.05	0.063								A_c
	143	188	222	250								d_h
	165	206	241	273								d_e
	0.7	0.8	0.9	1								A_l
300	0.03	0.045	0.06	0.075	0.09							A_c
	150	200	240	273	300							d_h
	180	224	262	296	327							d_e
	0.3	0.9	1	1.1	1.2							A_l
400	0.04	0.06	0.08	0.1	0.12	0.16						A_c
	160	218	267	308	343	400						d_h
	205	255	299	337	373	436						d_e
	1	1.1	1.2	1.3	1.4	1.6						A_l
500		0.075	0.1	0.13	0.15	0.2	0.25					A_c
		231	286	333	375	444	500					d_h
		283	331	374	413	483	545					d_e
		1.3	1.4	1.5	1.6	1.8	2					A_l
600		0.09	0.12	0.15	0.18	0.24	0.3	0.36				A_c
		240	300	353	400	480	545	600				d_h
		307	359	406	448	524	592	654				d_e
		1.5	1.6	1.7	1.8	2	2.2	2.4				A_l
800			0.16	0.2	0.24	0.32	0.4	0.48	0.64			A_c
			320	381	436	533	615	686	800			d_h
			410	463	511	598	675	745	872			d_e
			2	2.1	2.2	2.4	2.6	2.8	3.2			A_l

ALNOR® ventilation systems
is a registered trademark protected by a technical patent. All modification rights reserved.

Tolerances and deviations

Table 3, cont.
Dimensions and values for ducts

Side length (mm)	*100*	*150*	*200*	*250*	*300*	*400*	*500*	*600*	*800*	*1000*	*1200*	
1000				0.25	0.3	0.4	0.5	0.6	0.8	1		A_c
				400	462	571	667	750	889	1000		d_h
				512	566	662	747	825	965	1090		d_e
				2.5	2.6	2.8	3	3.2	3.6	4		A_l
1200					0.36	0.48	0.6	0.72	0.96	1.2	1.44	A_c
					480	600	706	800	960	1091	1200	d_h
					614	719	812	896	1049	1184	1308	d_e
					3	3.2	3.4	3.6	4	4.4	4.8	A_l
1400						0.56	0.7	0.84	1.12	1.4	1.68	A_c
						622	737	840	1018	1167	1292	d_h
						771	871	962	1125	1270	1403	d_e
						3.6	3.8	4	4.4	4.8	5.2	A_l
1600						0.64	0.8	0.96	1.28	1.6	1.92	A_c
						640	762	873	1067	1231	1371	d_h
						819	925	1022	1195	1350	1491	d_e
						4	4.2	4.4	4.8	5.2	5.6	A_l
1800							0.9	1.08	1.44	1.8	2.16	A_c
							783	900	1108	1286	1440	d_h
							976	1078	1261	1424	1573	d_e
							4.6	4.8	5.2	5.6	6	A_l
2000							1	1.2	1.6	2	2.4	A_c
							800	923	1143	1333	1500	d_h
							1024	1131	1323	1494	1650	d_e
							5	5.2	5.6	6	6.4	A_l

The cross sectional area is the length of side a multiplied by the length of side b.
The duct surface area is the the inner circumference multiplied by the length of the duct.
Hydraulic diameter: for a rectangular duct - diameter of a round duct which has the same pressure loss as the rectangular duct at the same air flow rate and coefficient of friction.

Formula: $d_h = 2 \times a \times b/a + b$.

Equivalent diameter: for a rectangular duct - diameter of a round duct which has the same pressure loss as the rectangular duct at the same air flow rate and coefficient of friction.

ALNOR® ventilation systems
is a registered trademark protected by a technical patent. All modification rights reserved.

Rigidity

Rectangular ducts and fittings are braced by transverse embossing of the metal sheet.
The ducts are additionally braced with galvanized baffle/strut tubes as shown in Fig. 2.

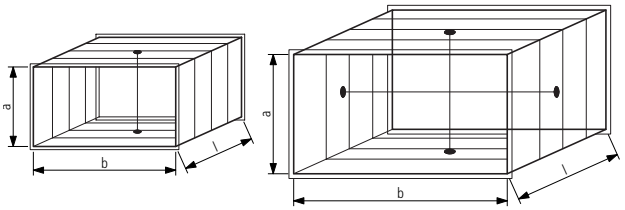

Fig. 2.

See Table 4 for the rules of bracing ventilation ducts.

Table 4
Rules for bracing ventilation ducts with tubes

A (mm)	*B (mm)*	*L (mm)*	*Number of braces*
<1000	<1000	<1000	0
<1000	>1000	<1000	1
<1000	1000-1500	<1000	2
<1000	1500-2000	1500-2000	4
1000-1500	1000-1500	<1000	1 cross brace
1000-1500	1000-1500	1000-1500	2 cross braces

Bends and elbows are braced with vanes according to **EN 1505**, "Ventilation for buildings. Sheet metal air ducts and fittings with rectangular cross-section. Dimensions".
Elbows are recommended for low air velocity and/or low-pressure ventilation systems and smaller sizes of side a ≤ 400 mm.
Bends and elbows set at ≤ 45° require no vanes.
The vane alignment is shown in Table 7 and Fig. 3.

Duct surface area

The surface area of rectangular ducts is measured according to **DIN 18379**, "German construction contract procedures – Part C: General technical specifications for building works – Room ventilation systems".
The ducts with a surface area < 1.0 m² are calculated as 1.0 m² fittings.
The fittings with a surface area < 1.0 m² are calculated as 1.0 m² fittings.

of connection

The ventilation duct connections are fabricated in accordance with **PN-B-76002** "Ventilation. Connections of ventilation equipment, ducts and fittings made of metal sheets".
Rectangular ducts are connected to ventilation equipment using frames made of sheet angles and corner straps.
The sheet angle size depends on the side length of the rectangular duct.
The rules for using sheet angle frames in rectangular ducts and fittings are shown in Table 5.

Table 5
Rules for using sheet angle frames in ventilation rectangular ducts and fittings in the standard version with galvanized steel sheet

Side length (mm)	≤ 1000	> 1000	> 2500
Sheet angle size (mm)	P20	P30	P40

Corner straps and sheet angles are made air-tight using sealants.

Stainless steel sheet angles and corner straps are the standard accessories for stainless steel ducts and fittings. Aluminium angles and corner straps are the standard accessories for aluminium ducts and fittings.
The rules for using sheet angle frames in rectangular ducts and fittings are shown in Table 6.

Table 6
Rules for using sheet angle frames in standard ventilation rectangular ducts and fittings made from stainless steel or aluminium sheet

Side length (mm)	≤ 1000	> 1000	> 2500
Sheet angle size (mm)	PQ20	PQ30	PQ30

Table 7
The vane alignment is according to **EN 1505**, "Ventilation for buildings. Sheet metal air ducts and fittings with rectangular cross-section. Dimensions".

Duct width a (mm)	*Number of vanes*	*L (mm)*	*Vane spacing (mm)*		
			a_1	a_1	a_1
> 400 ≤ 800	1	a/3			
> 800 ≤ 1600	2	a/4	a/2		
> 1600 ≤ 2000	3	a/8	a/3	a/2	

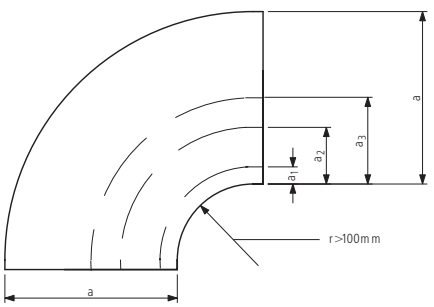

Fig. 3.

ALNOR® ventilation systems
is a registered trademark protected by a technical patent. All modification rights reserved.

TECHNICAL INFORMATION

Design

AlnorCAM is a software suite designed for selecting rectangular components for ventilation ductwork.
AlnorCAM provides a full summary of selected ventilation ductwork components, including the number of ducts and fittings to be ordered plus their surface areas in square metres and fabrication models. The programme reduces the time to fabricate a ready-to-use ventilation ductwork system and helps eliminate errors due to inaccurate dimensioning. Ducts and fittings plotted in AlnorCAM are displayed in the form of 3D models and engineering drawings. The programme automatically calculates the surface areas of ducts and fittings, including the required quantity of thermal insulation if included in the design. The automatically generated summary saves time and makes normal designing and calculation work much easier.
An extensive product database includes insulated and pre-insulated ductwork components. The programme also calculates the required quantity of mineral wool for insulated ducts and fittings. Three thermal insulation thickness sizes are available: 30, 50 and 100 mm.
Additionally, the cladding and inner ducts can be made from different materials as required (galvanized steel sheet, aluminium sheet, or stainless steel sheet).

Benefits of AlnorCAM

- minimizes errors in the processing of engineering documentation,
- significantly reduces fabrication lead times while maintaining competitive pricing and quality,
- precision, reliability and flexibility: you always know how many metres of ductwork are needed, which helps to avoid confusion on site,
- maximum benefits when AlnorCAM is used for B2B ordering
- AlnorCAM is a freeware design suite.
- Available in Polish and English

Download and install AlnorCAM

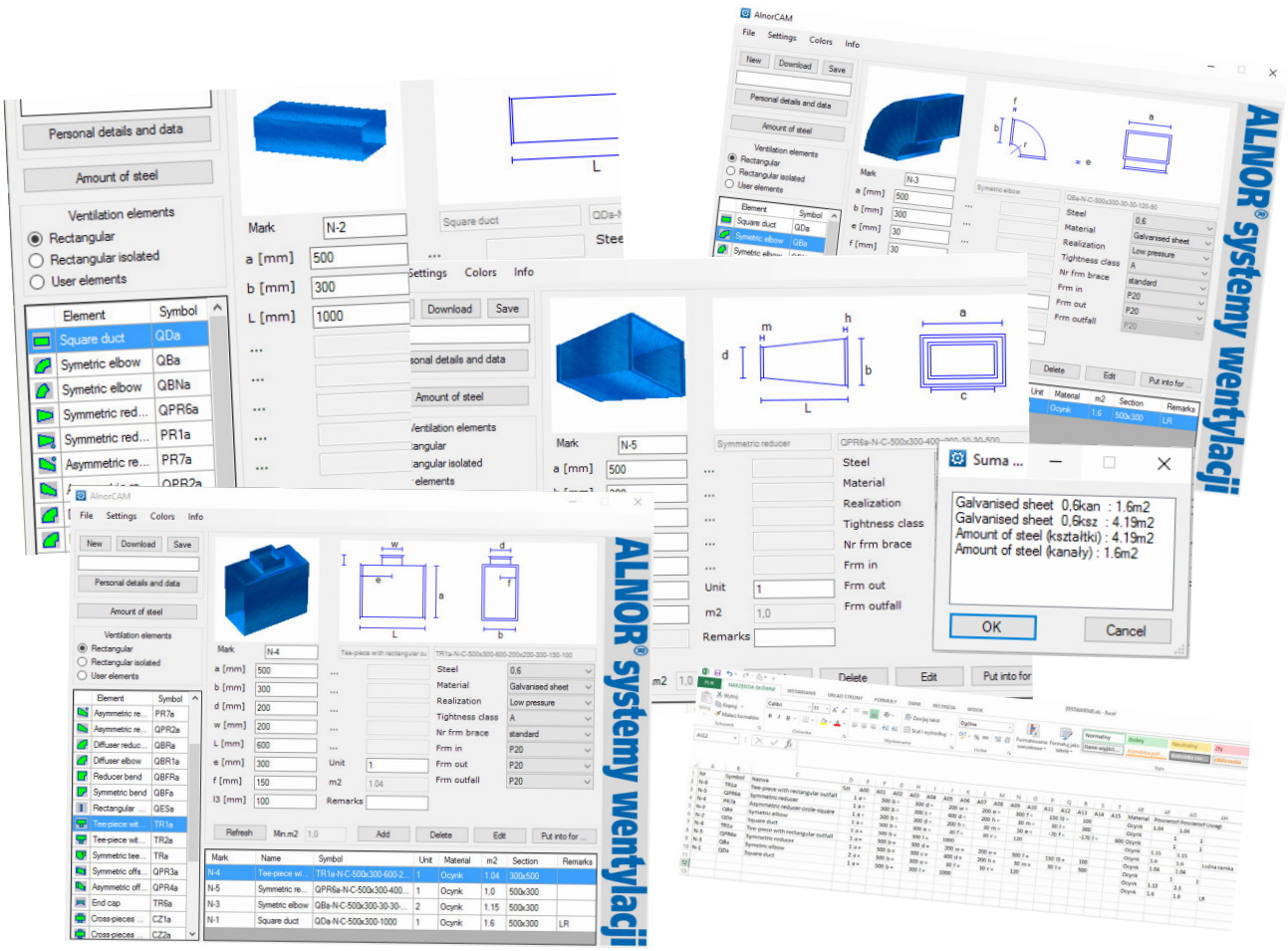

ALNOR® ventilation systems
is a registered trademark protected by a technical patent. All modification rights reserved.

Rectangular ducts
QDN

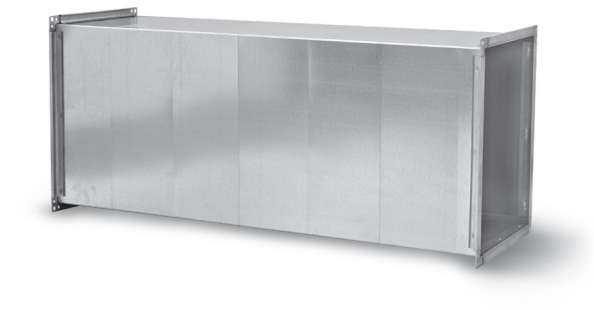

Description

All rectangular ducts are fitted with flange frames made of sheet angles and braced by cross-wise ribbing. Larger ducts are additionally braced with galvanized tubes (baffles). The ducts are manufactured in the following standard sections to standardize the fabrication, shipping and installation procedure:
If a or b ≤ 500, then L = 1250 mm
If a or b > 500, then L = 1500 mm

If rectangular duct ends should be finished otherwise than with flange frames, use the following designations to indicate the required option:
LR — separate frame
BR — no frame (bare end)
Z — blind end

Product code example
Product code: **QD - N - OCY - 500 x 300 - 1500**

type
N
S
OCY
KWS
ALU
a
b
l

N — low-pressure version
S — medium-pressure version
C — galvanized steel
K — stainless steel
A — aluminium
a — width
b — height
l — length

Dimensions

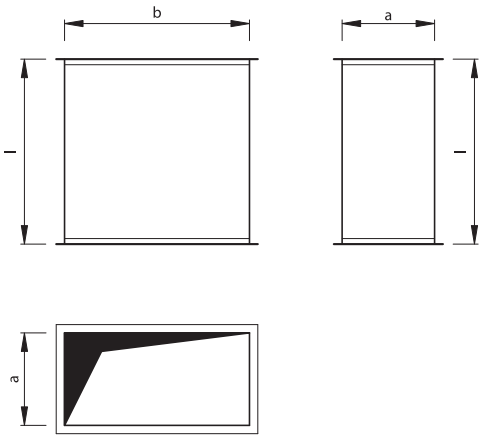

ALNOR® ventilation systems
is a registered trademark protected by a technical patent. All modification rights reserved.

Angle rectangular ducts spigot plates
QD1



Description

The angle rectangular duct spigot plates are tipped with sheet angles at one end. The other end features a spigot plate similar to a roof kerb, the size of which can be chosen according to individual requirements. The duct angle to the plate can be anywhere between 10 and 90 degrees according to individual requirements.

Available materials — Product code examples

QD1-...-...-... — galvanized steel sheet

QD1-K-...-...-... — 1.4301/304 stainless steel sheet

QD1-K-...-...-...-316L — 1.4404/316L stainless steel sheet

QD1-A-...-...-... — AW-1050A H24 aluminium sheet

Product code example

Product code: **QD1 - N - OCY - 500x300 - 1500 - 45 - 800x500**

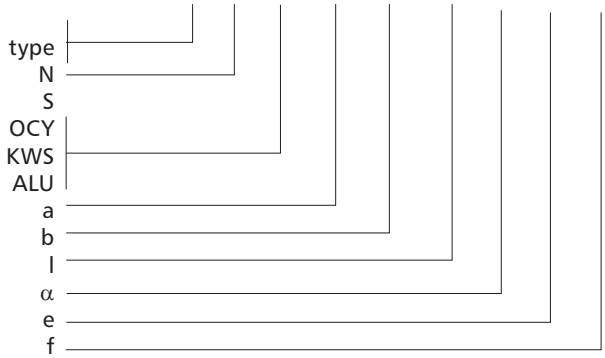

N — low-pressure version
S — medium-pressure version
OCY — galvanized steel
KWS — stainless steel
ALU — aluminium
a — width
b — height
l — length
α — angle
e — base dimension a
f — base dimension b

Dimensions

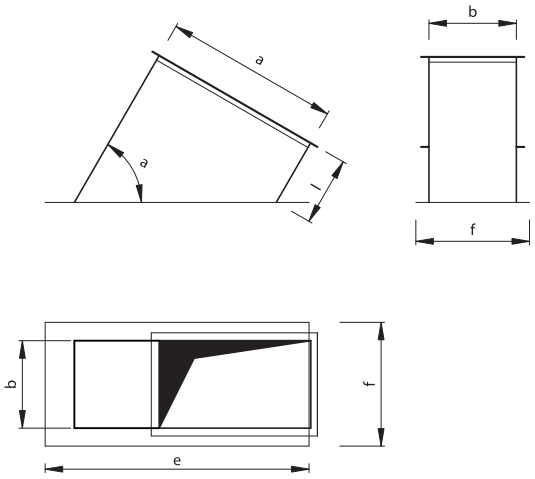

ALNOR® ventilation systems
is a registered trademark protected by a technical patent. All modification rights reserved.

Rectangular elbows

QBF



Description

The 90° elbows are fitted with sheet angles, and the entire product is braced by cross-wise ribbing.
The elbows are recommended for low air velocity and/or low-pressure ventilation systems and smaller sizes of side b ≤ 400 mm. The standard radius is r = 120 mm.
Typical applications of the elbows include rerouting the ductwork by 90 degrees with the same clear cross-section.

Available materials — Product code examples

QBF-...-...-...-... — galvanized steel sheet

QBF-...-K-...-...-... — 1.4301/304 stainless steel sheet

QBF-...-K-...-...-...-316L — 1.4404/316L stainless steel sheet

QBF-...-A-...-...-... — AW-1050A H24 aluminium sheet

Product code example

Product code: **QBF - N - OCY - 500x300 - 30 - 30 - 120**

type
- N
- S

OCY
KWS
ALU

- a
- b
- e
- f
- r

Dimensions

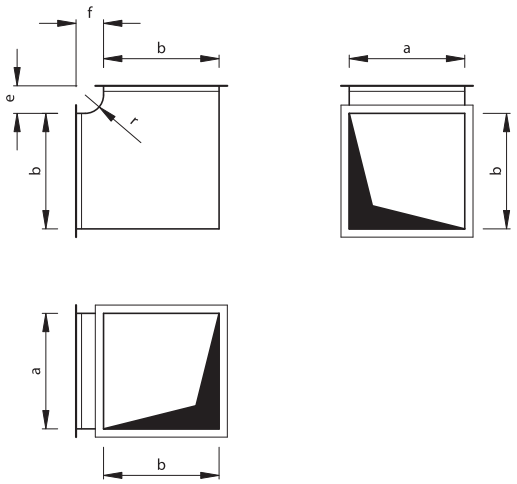

N — low-pressure version
S — medium-pressure version
OCY — galvanized steel
KWS — stainless steel
ALU — aluminium
a — width
b — height
e — extension (default e = 150 mm)
f — extension (default f = 150 mm)
r — radius (default r = 120 mm)

The elbows are available at 90° *only.* The standard versions are made in default dimension sizes which do not have to be specified.

ALNOR® ventilation systems
is a registered trademark protected by a technical patent. All modification rights reserved.

Variable clearance elbows

QBFR



Description

The 90° elbows are fitted with sheet angles, and the entire product is braced by cross-wise ribbing.
The elbows are recommended for low air velocity and/or low-pressure ventilation systems and smaller sizes of side b ≤ 400 mm.
The standard radius is r = 120 mm.
Typical applications of the elbows include rerouting the ductwork by 90 degrees with the inner clearance varying along the elbow path.

Available materials — Product code examples
QBFR-...-...-...-... — galvanized steel sheet
QBFR-...-K-...-...-... — 1.4301/304 stainless steel sheet
QBFR-...-K-...-...-...-316L — 1.4404/316L stainless steel sheet
QBFR-...-A-...-...-... — AW-1050A H24 aluminium sheet

Product code example
Product code: **QBFR - N - OCY - 500x300 - 400 - 30 - 30 - 120**

type
N
S
OCY
KWS
ALU
a
b
d
e
f
r

Dimensions

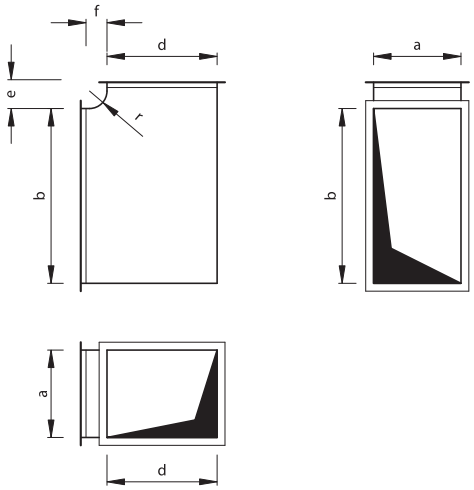

N — low-pressure version
S — medium-pressure version
OCY — galvanized steel
KWS — stainless steel
ALU — aluminium
a — width
b — height
d — outlet height
e — extension (default e = 150 mm)
f — extension (default f = 150 mm)
r — radius (default r = 120 mm)

The elbows are available at 90° *only.* The standard versions are made in default dimension sizes which do not have to be specified.

ALNOR® ventilation systems
is a registered trademark protected by a technical patent. All modification rights reserved.

Rectangular bends
QB

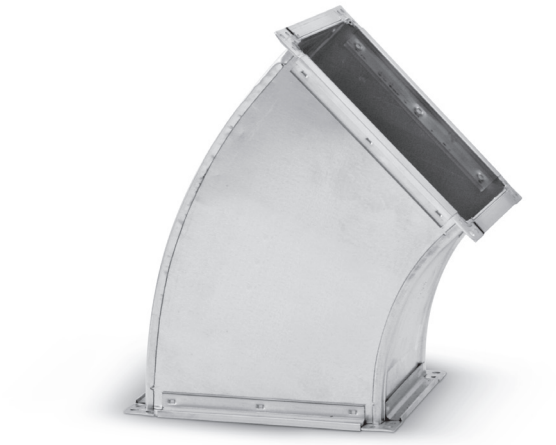

Description

The standard 90° bends are fitted with sheet angles, have an inner and outer rounding, and the entire product is braced by cross-wise ribbing.
The bends are recommended for high air velocity and/or higher pressure ventilation systems and greater sizes of side b > 400 mm.
The standard radius is r = 120 mm. The standard angle is a = 90°.
Typical applications of the bends include rerouting the ductwork by 90° with the same clear cross-section.

Available materials — Product code examples

QB-...-...-...-... — galvanized steel sheet

QB-...-K-...-...-... — 1.4301/304 stainless steel sheet

QB-...-K-...-...-...-316L — 1.4404/316L stainless steel sheet

QB-...-A-...-...-... — AW-1050A H24 aluminium sheet

Product code example

Product code: **QB - N - OCY - 500x300 - 30 - 30 - 120 - 90**

type
- N
- S
- OCY
- KWS
- ALU
- a
- b
- e
- f
- r
- α

Dimensions

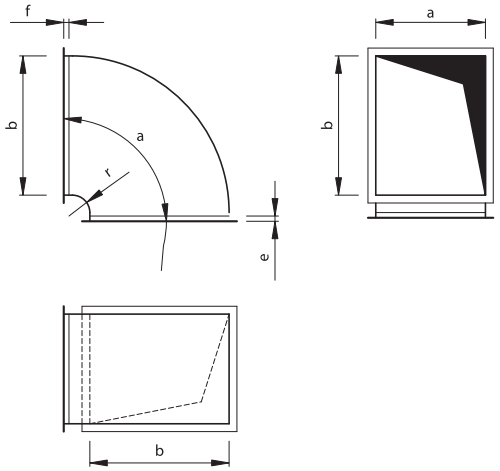

N — low-pressure version
S — medium-pressure version
OCY — galvanized steel
KWS — stainless steel
ALU — aluminium
a — width
b — height
e — extension (default e = 30 mm)
f — extension (default f = 30 mm)
r — radius (default r = 120 mm)
α — angle (default α = 90°)

ALNOR® ventilation systems
is a registered trademark protected by a technical patent. All modification rights reserved.

Variable clearance bends
QBR



Description

The standard 90° bends are fitted with sheet angles, have an inner and outer rounding, and the entire product is braced by cross-wise ribbing. The bends are recommended for high air velocity and/or higher pressure ventilation systems and greater sizes of side b > 400 mm. The standard radius is r = 120 mm. The standard angle is a = 90°. Typical applications of the elbows include rerouting the ductwork by 90 degrees with the inner clearance varying along the elbow path.

Available materials — Product code examples

QBR-...-...-...-... — galvanized steel sheet

QBR-...-K-...-...-... — 1.4301/304 stainless steel sheet

QBR-...-K-...-...-...-316L — 1.4404/316L stainless steel sheet

QBR-...-A-...-...-... — AW-1050A H24 aluminium sheet

Product code example

Product code: **QBR - N - OCY - 500x300 - 400 - 30 - 30 - 120-90**

type
N
S
OCY
KWS
ALU
a
b
d
e
f
r
α

Dimensions

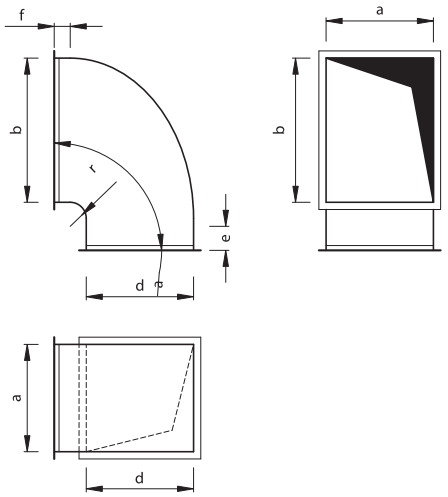

N — low-pressure version
S — medium-pressure version
OCY — galvanized steel
KWS — stainless steel
ALU — aluminium
a — width
b — height
d — outlet height
e — extension (default e = 30 mm)
f — extension (default f = 30 mm)
r — radius (default r = 120 mm)
α — angle (default α = 90°)

The standard versions are made in default dimension sizes which do not have to be specified.

ALNOR® ventilation systems
is a registered trademark protected by a technical patent. All modification rights reserved.

Diffuser bends

QBR1



Description

The standard 90° bends are fitted with sheet angles, have an inner and outer rounding, and the entire product is braced by cross-wise ribbing. The bends are recommended for high air velocity and/or higher pressure ventilation systems and greater sizes of side a > 400 mm.
The standard radius is r = 120 mm. The standard angle is a = 90°.
Typical applications of the bends include rerouting the ductwork by 90 degrees with the inner clearance varying in two planes along the bend path. A diffuser bend does not require vanes. The product can feature additional bracing with baffles on request.

Available materials — Product code examples

QBR1-...-...-...-... — galvanized steel sheet

QBR1-...-K-...-...-... — 1.4301/304 stainless steel sheet

QBR1-...-K-...-...-...-316L — 1.4404/316L stainless steel sheet

QBR1-...-A-...-...-... — AW-1050A H24 aluminium sheet

Product code example

Product code: **QBR1-N-OCY-500x300x400-200-30-30-120-90**

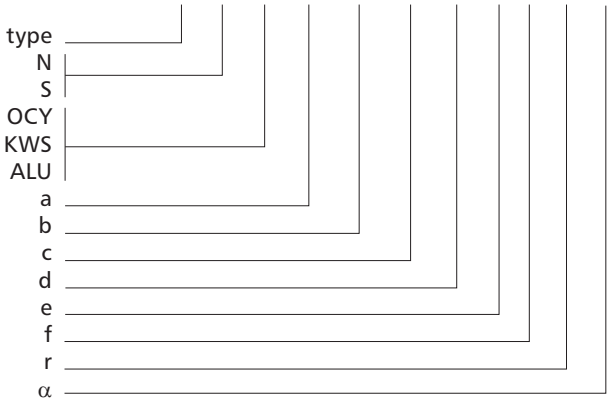

Dimensions

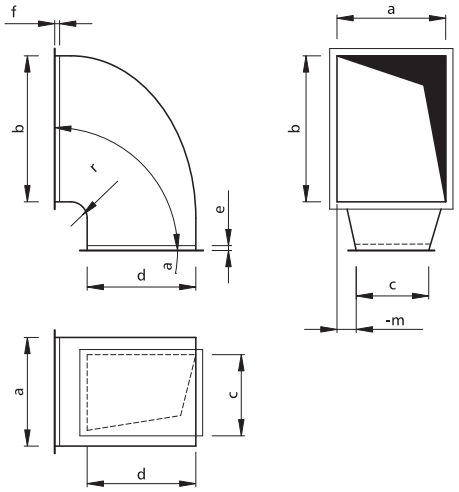

N — low-pressure version
S — medium-pressure version
OCY — galvanized steel
KWS — stainless steel
ALU — aluminium
a — width
b — height
c — outlet width
d — outlet height
e — extension (default e = 30 mm)
f — extension (default f = 30 mm)
r — radius (default r = 120 mm)
α — angle (default α = 90°)

The standard versions are made in default dimension sizes which do not have to be specified.

ALNOR® ventilation systems
is a registered trademark protected by a technical patent. All modification rights reserved.

Eccentric reducers

QPR2



Description

The eccentric reducers are adapters designed for coupling two rectangular ducts of different sizes.
The ends are fitted with sheet angles, and the entire fitting is braced by cross-wise ribbing.
The eccentric reducers help route the ventilation ductwork with liberal modifications of all duct dimensions and offsetting the centreline by any value in both directions.

Available materials — Product code examples

QPR2-...-...-...-... — galvanized steel sheet

QPR2-...-K-...-...-... — 1.4301/304 stainless steel sheet

QPR2-...-K-...-...-...-316L — 1.4404/316L stainless steel sheet

QPR2-...-A-...-...-... — AW-1050A H24 aluminium sheet

Dimensions

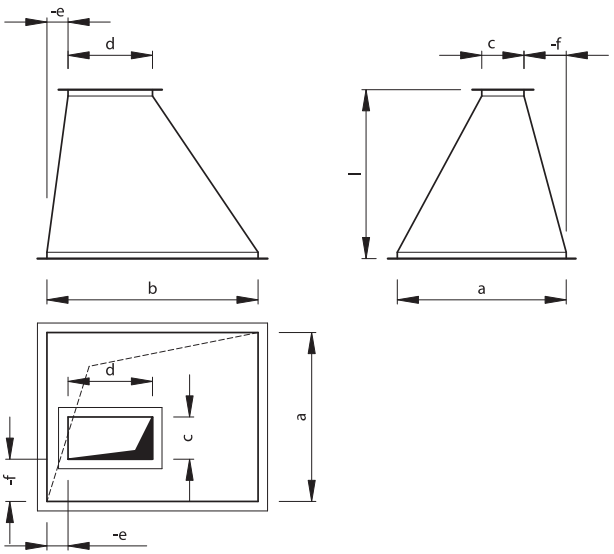

Product code example

Product code: **QPR2-N-OCY-500x300-400x200-30-30-300-300-300**

type
N
S
OCY
KWS
ALU
a
b
c
d
e
f
h
m
l

N — low-pressure version
S — medium-pressure version
OCY — galvanized steel
KWS — stainless steel
ALU — aluminium
a — width
b — height
c — outlet width
d — outlet height
e — vertical offset
f — horizontal offset
h — extension (default h = 30 mm)
m — extension (default m = 30 mm)
l — length

The standard versions are made in default dimension sizes which do not have to be specified.

ALNOR® ventilation systems
is a registered trademark protected by a technical patent. All modification rights reserved.

Eccentric square-to-round transitions

PR7/PRL7

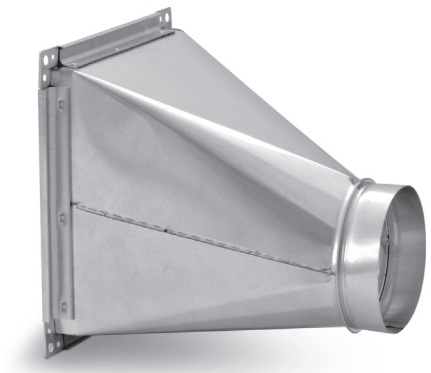

Description

This transition piece changes the ductwork shape from rectangular to round.
The fitting helps route the ventilation ductwork with liberal modifications of all duct dimensions and offsetting the centreline by any value in both directions.
The round connector is male in the standard version. The PRL7 fittings have a male connector fitted with a gasket.

Available materials — Product code examples

PR7 -...-...-...	— galvanized steel sheet
PR7-...-K-...-...-...	— 1.4301/304 stainless steel sheet
PR7-...-K-...-...-...- 316L	— 1.4404/316L stainless steel sheet
PR7-...-A-...-...-...	— AW-1050A H24 aluminium sheet

Product code example

Product code: **PR7-N-OCY-500x300-50-30-30-50-800-300**

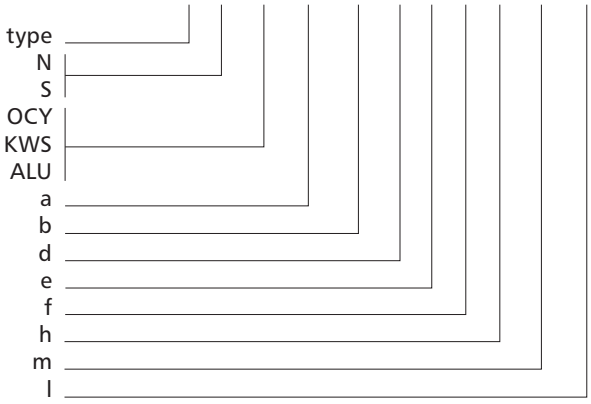

Dimensions

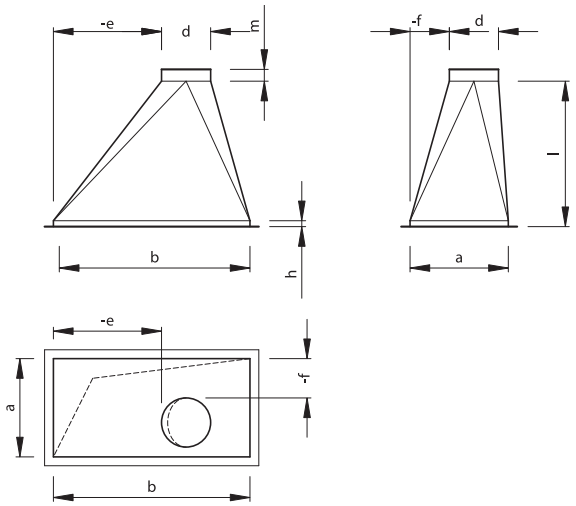

PR7 — type w/o gasket
PRL7 — type w/gasket
N — low-pressure version
S — medium-pressure version
OCY — galvanized steel
KWS — stainless steel
ALU — aluminium
a — width
b — height
d — diameter
e — vertical offset
f — horizontal offset
h — extension (default h = 30 mm)
m — flange length (default m = 50 *mm*)
l — length

The standard versions are made in default dimension sizes which do not have to be specified.

ALNOR® ventilation systems
is a registered trademark protected by a technical patent. All modification rights reserved.

Concentric reducers

QPR6



Dimensions

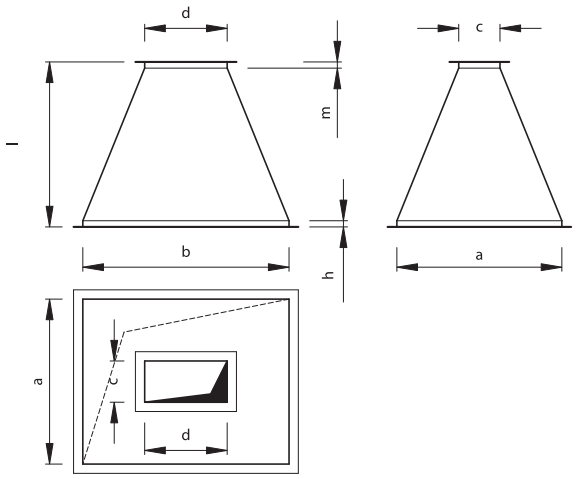

Description

The reducers are adapters designed for coupling two rectangular ducts of different sizes.
The ends are fitted with sheet angles, and the entire fitting is braced by cross-wise ribbing.
The reducers help in routing ductwork at points where a symmetric cross-section reduction is required. The ducts are kept coaxial at both ends.

Available materials — Product code examples

QPR6 -...-...-... — galvanized steel sheet

QPR6-...-K-...-...-.. . — 1.4301/304 stainless steel sheet

QPR6-...-K-...-...-...-316L — 1.4404/316L stainless steel sheet

QPR6-...-A-...-...-... — AW-1050A H24 aluminium sheet

Product code example

Product code: **QPR6-N-OCY-500x300-400x200-30-30-300**

type
N
S
OCY
KWS
ALU
a
b
c
d
h
m
l

N — low-pressure version
S — medium-pressure version
OCY — galvanized steel
KWS — stainless steel
ALU — aluminium
a — width
b — height
c — inlet clear width
d — inlet height
h — extension (default h = 30 mm)
m — extension (default m = 30 mm)
l — length

The standard versions are made in default dimension sizes which do not have to be specified.

ALNOR® ventilation systems
is a registered trademark protected by a technical patent. All modification rights reserved.

Concentric square-to-round transitions

PR1/PRL1

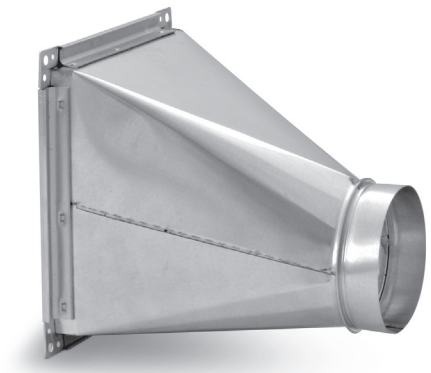

Dimensions

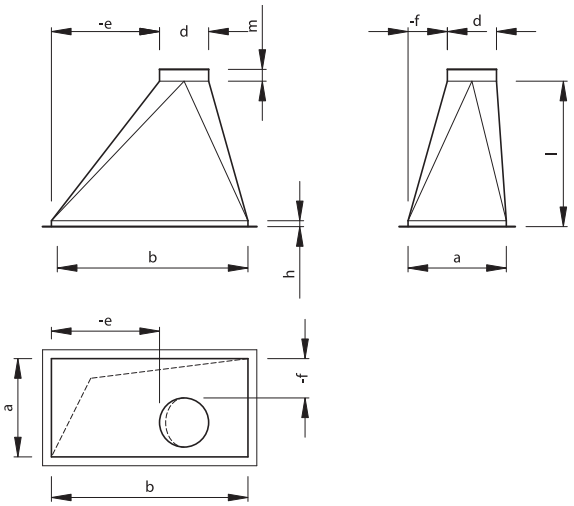

Description

This transition piece changes the ductwork shape from square to round.
This fitting helps in routing round and rectangular ducts with the centrelines aligned.
The square connector has a flange frame in the standard version.
The round connector is male in the standard version.
The PRL1 fittings have a male connector fitted with a gasket.

Available materials — Product code examples

QPR1 -...-...-... — galvanized steel sheet

QPR1-...-K-...-...-.. . — 1.4301/304 stainless steel sheet

QPR1-...-K-...-...-... - 316L — 1.4404/316L stainless steel sheet

QPR1-...-A-...-...-... — AW-1050A H24 aluminium sheet

Product code example

Product code: **PR1 - N - OCY - 500x300 - 250 - 30 - 30 - 800**

type
N
S
OCY
KWS
ALU
a
b
d
h
m
l

PR1 — type w/o gasket
PRL1 — type w/gasket
N — low-pressure version
S — medium-pressure version
OCY — galvanized steel
KWS — stainless steel
ALU — aluminium
a — width
b — height
d — diameter
h — extension (default h = 30 mm)
m — flange length (default m = 50 *mm*)
l — length

The standard versions are made in default dimension sizes which do not have to be specified.

ALNOR® ventilation systems
is a registered trademark protected by a technical patent. All modification rights reserved.

Offsets

QPR3



Description

Offsets help bypassing obstacles along the ductwork route, e.g. at intersections of two ducts.
The ends are fitted with sheet angles, and the entire fitting is braced by cross-wise ribbing.
To achieve the required air flow rate, appropriate length sizes l and offset sizes e should be used.

Available materials — Product code examples

QPR3 -...-...-... — galvanized steel sheet

QPR3-...-K-...-...-.. . — 1.4301/304 stainless steel sheet

QPR3-...-K-...-...-... - 316L — 1.4404/316L stainless steel sheet

QPR3-...-A-...-...-... — AW-1050A H24 aluminium sheet

Product code example

Product code: **QPR3 - N - OCY - 500 x 300 - 100 - 30 - 30 - 300**

type
N
S
OCY
KWS
ALU
a
b
e
h
m
l

Dimensions

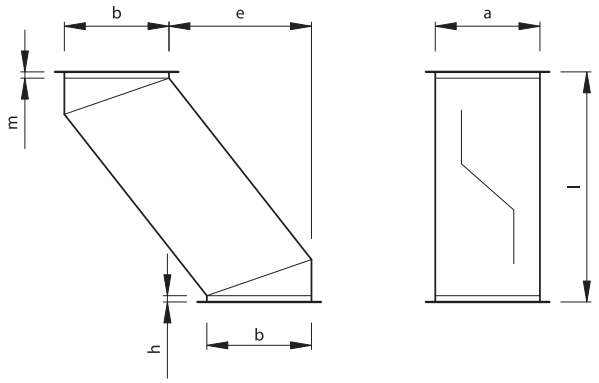

N — low-pressure version
S — medium-pressure version
OCY — galvanized steel
KWS — stainless steel
ALU — aluminium
a — width
b — height
e — offset
h — extension (default h = 30 mm)
m — extension (default m = 30 mm)
l — length

The standard versions are made in default dimension sizes which do not have to be specified.

ALNOR® ventilation systems
is a registered trademark protected by a technical patent. All modification rights reserved.

Offsets

QPR4



Description

Variable diameter offsets facilitate bypassing obstacles along the ductwork route while changing the connected duct height, which helps building intersections of two ducts. The ends are fitted with sheet angles, and the entire fitting is braced by cross-wise ribbing. To achieve the required air flow rate, appropriate length sizes l and offset sizes e should be used.

Available materials — Product code examples

QPR4 -...-...-... — galvanized steel sheet

QPR4-...-K-...-...-.. . — 1.4301/304 stainless steel sheet

QPR4-...-K-...-...-... - 316L — 1.4404/316L stainless steel sheet

QPR4-...-A-...-...-... — AW-1050A H24 aluminium sheet

Dimensions

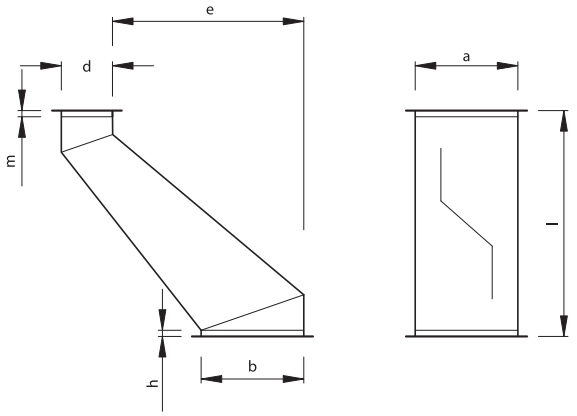

Product code example

Product code: **QPR4-N-OCY-500x300-200-100-30-30-800**

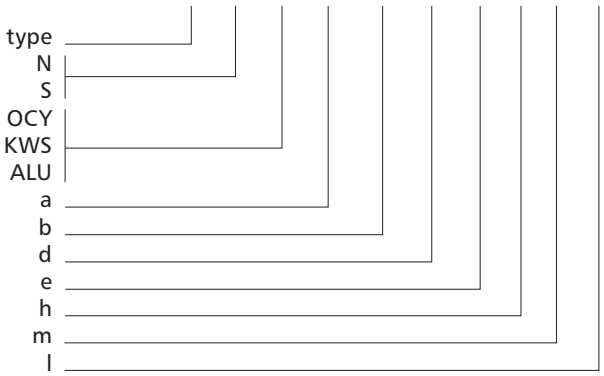

N — low-pressure version
S — medium-pressure version
OCY — galvanized steel
KWS — stainless steel
ALU — aluminium
a — width
b — height
d — outlet height
e — offset
h — extension (default h = 30 mm)
m — flange length (default m = 30 *mm*)
l — length

The standard versions are made in default dimension sizes which do not have to be specified.

ALNOR® ventilation systems
is a registered trademark protected by a technical patent. All modification rights reserved.

Equal T-pieces
TR



Dimensions

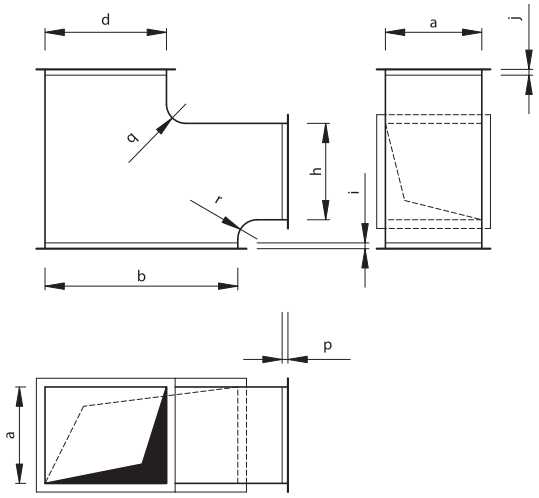

Description

The T-piece ends are fitted with sheet angles, and the entire fitting is braced by cross-wise ribbing.
This fitting allows building ductwork with a branch taken off at 90 degrees.
The T-piece height a is fixed.

Available materials — Product code examples

TR -...-...-... -...-...	— galvanized steel sheet
TR-...-K-...-...-.. .-...	— 1.4301/304 stainless steel sheet
TR-...-K-...-...-... -... - 316L	— 1.4404/316L stainless steel sheet
TR-...-A-...-...-...-...	— AW-1050A H24 aluminium sheet

Product code example

Product code **TR - N - OCY - 500x300 - 250 - 200 - 30 - 30 - 30 - 120 - 120**

- type
- N
- S
- OCY
- KWS
- ALU
- a
- b
- d
- h
- i
- j
- p
- q
- r

N — low-pressure version
S — medium-pressure version
OCY — galvanized steel
KWS — stainless steel
ALU — aluminium
a — width
b — height
d — outlet height
h — take-off height
i — extension (default i = 30 mm)
j — extension (default j = 30 mm)
p — extension (default p = 30 mm)
q — radius (default q = 120 mm)
r — radius (default r = 120 mm)

The standard versions are made in default dimension sizes which do not have to be specified.

ALNOR® ventilation systems
is a registered trademark protected by a technical patent. All modification rights reserved.

T-pieces with square take-off
TR1



Description

The T-piece ends are fitted with sheet angles, and the entire fitting is braced by cross-wise ribbing.
The T-piece helps building ductwork with a take-off branch at 90 degrees and a reduced size. The inlet and outlet sizes are the same.

Available materials — Product code examples

TR1 -...-...-...-...-... — galvanized steel sheet

TR1-...-K-...-...-...-... — 1.4301/304 stainless steel sheet

TR1-...-K-...-...-...-...- 316L — 1.4404/316L stainless steel sheet

TR1-...-A-...-...-...-... — AW-1050A H24 aluminium sheet

Dimensions

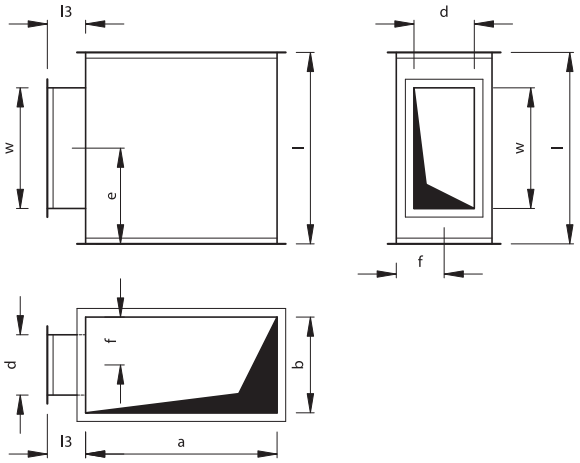

Product code example

Product code: **TR1 - N - OCY - 500x300 - 600 - 450x250 - 20 - 20 - 100**

type
- N
- S

OCY
KWS
ALU

- a
- b
- l
- w
- d
- e
- f
- l_3

N — low-pressure version
S — medium-pressure version
OCY — galvanized steel
KWS — stainless steel
ALU — aluminium
a — width
b — height
l — length
w — take-off length
d — take-off width
e — take-off offset in length
f — take-off offset in width
l_3 — take-off length (default I3 = 100 mm)

The standard versions are made in default dimension sizes which do not have to be specified.

ALNOR® ventilation systems
is a registered trademark protected by a technical patent. All modification rights reserved.

Reducing T-pieces
TR7



Dimensions

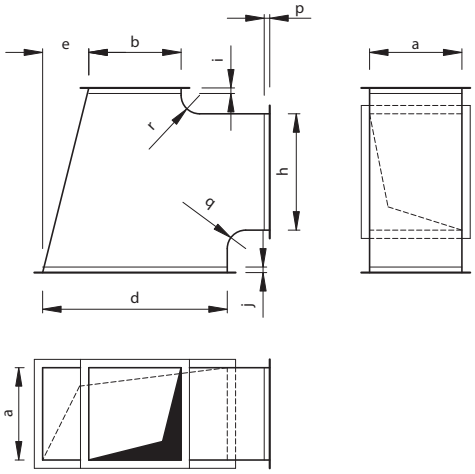

Description

The T-piece ends are fitted with sheet angles, and the entire fitting is braced by cross-wise ribbing.
The T-piece helps building ductwork with a take-off branch at 90 degrees, reduction of the main duct clear passage and an offset by any value of size m.

Available materials — Product code examples

TR7 -...-...-...-...-...	— galvanized steel sheet
TR7-...-K-...-...-...-...	— 1.4301/304 stainless steel sheet
TR7-...-K-...-...-...-...- 316L	— 1.4404/316L stainless steel sheet
TR-...-A-...-...-...-...	— AW-1050A H24 aluminium sheet

Product code example
Product code: **TR7-N-OCY-500x200-300-450-30-30-30-120-120-120**

type	
N	— low-pressure version
S	— medium-pressure version
OCY	— galvanized steel
KWS	— stainless steel
ALU	— aluminium
a	— width
b	— height
d	— outlet height
h	— take-off height
i	— extension (default i = 30 mm)
j	— extension (default j = 30 mm)
p	— extension (default p = 30 mm)
q	— radius (default q = 120 mm)
r	— radius (default r = 120 mm)
e	— offset

The standard versions are made in default dimension sizes which do not have to be specified.

ALNOR® ventilation systems
is a registered trademark protected by a technical patent. All modification rights reserved.

Concentric reducing T-pieces
TR8

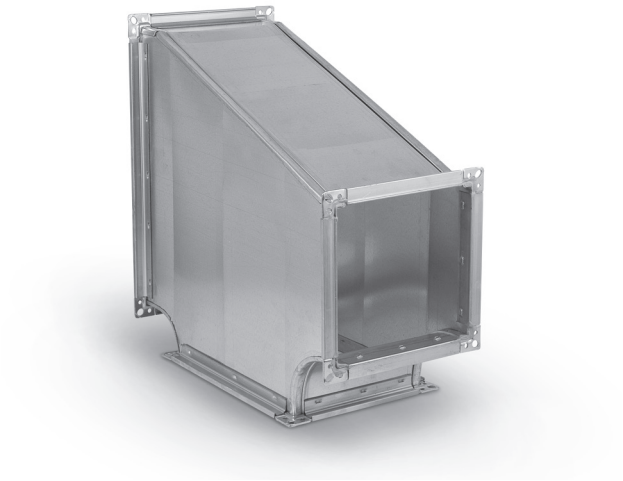

Dimensions

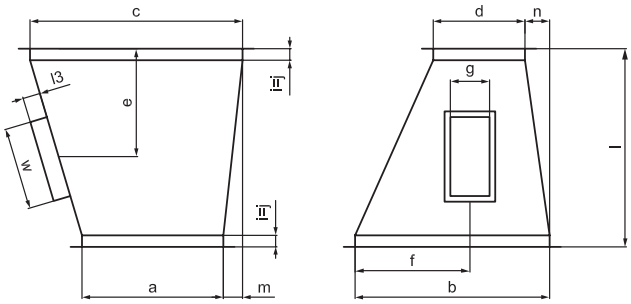

Description

The T-piece ends are fitted with sheet angles, and the entire fitting is braced by cross-wise ribbing.
The T-piece helps building ductwork with a take-off branch at 90 degrees, reduction of the main duct clear passage and an offset by any value of size m.
The take-off can be fabricated with height other than that of the T-piece.

Available materials — Product code examples

TR8 -...-...-...-...-... — galvanized steel sheet

TR8-...-K-...-...-...-... — 1.4301/304 stainless steel sheet

TR8-...-K-...-...-...-...- 316L — 1.4404/316L stainless steel sheet

TR8-...-A-...-...-...-... — AW-1050A H24 aluminium sheet

Product code example

Product code: **TR8-N-OCY-300x500-400x200-600-400x150-100-50-50-80-90-30-30**

type	
N	— low-pressure version
S	— medium-pressure version
OCY	— galvanized steel
KWS	— stainless steel
ALU	— aluminium
a	— width
b	— height
c	— outlet width
d	— outlet height
l	— length
w	— take-off length
g	— take-off width
l_3	— take-off length (default l_3 = 100 mm)
m	— vertical offset
n	— horizontal offset
e	— take-off offset in length
f	— take-off offset in width
i	— extension (default i = 30 mm)
j	— extension (default j = 30 mm)

The standard versions are made in default dimension sizes which do not have to be specified.

ALNOR® ventilation systems
is a registered trademark protected by a technical patent. All modification rights reserved.

Concentric reducing T-pieces
TR9



Dimensions

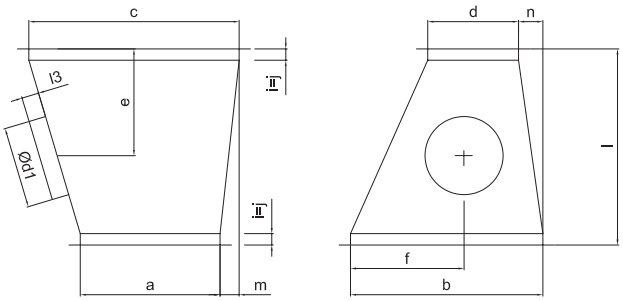

Description

The concentric reducing T-piece ends are fitted with sheet angles, and the entire fitting is braced by cross-wise ribbing. The round take-off connector is male and located symmetrically in the side wall.
This fitting helps building ductwork with a round take-off at an angle; the angle value depends on the wall slope at the take-off side.

Available materials — Product code examples

TR9 -...-...-...-...-... — galvanized steel sheet

TR9-...-K-...-...-...-... — 1.4301/304 stainless steel sheet

TR9-...-K-...-...-...-...- 316L — 1.4404/316L stainless steel sheet

TR9-...-A-...-...-...-... — AW-1050A H24 aluminium sheet

Product code example

Product code: **TR9-N-OCY-300x500-400x200-600-125-100- 50-50-80-90- 30-30**

type
N
S
OCY
KWS
ALU
a
b
c
d
l
d_1
l_3
m
n
e
f
i
j

N — low-pressure version
S — medium-pressure version
OCY — galvanized steel
KWS — stainless steel
ALU — aluminium
a — width
b — height
c — outlet height
d — take-off height
l — extension (default l = 30 mm)
d_1 — take-off diameter
l_3 — take-off length (default l_3 = 30 mm)
m — vertical offset
n — horizontal offset
e — take-off offset in length
f — take-off offset in width
i — extension (default i = 30 mm)
j — extension (default j = 30 mm)

The standard versions are made in default dimension sizes which do not have to be specified.

ALNOR® ventilation systems
is a registered trademark protected by a technical patent. All modification rights reserved.

Four-way pieces with round take-offs
CZ2

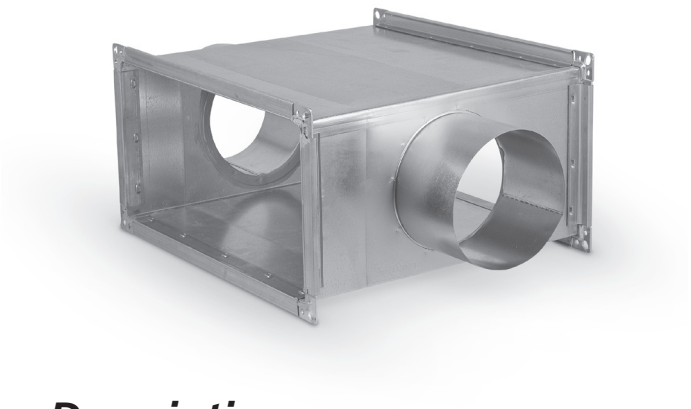

Dimensions

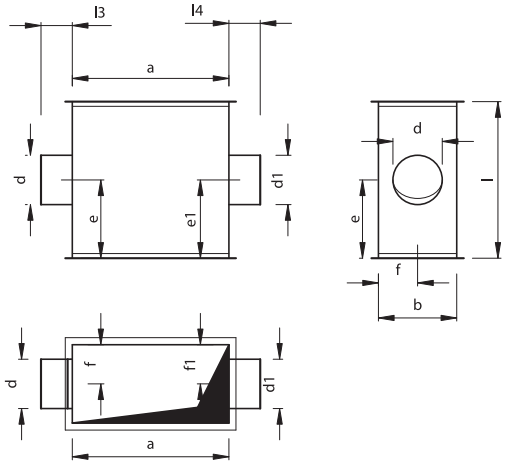

Description

All four-way pieces with round take-offs are fitted with flange frames made of sheet angles and braced by cross-wise ribbing. The round take-off ports are coaxial in the standard version. The standard round take-off ports are male; the CZL2 version is available on request with male connectors fitted with gaskets.

Available materials — Product code examples

CZ2-...-...-...-...-... — galvanized steel sheet

CZ2-...-K-...-...-...-... — 1.4301/304 stainless steel sheet

CZ2-...-K-...-...-...-...- 316L — 1.4404/316L stainless steel sheet

CZ2-...-A-...-...-...-... — AW-1050A H24 aluminium sheet

Product code example

Product code: **CZ2 - N - OCY - 500x300 - 400 - 160 - 50 - 80 - 100 - 150 - 100 - 80 - 100**

type
N
S
OCY
KWS
ALU
a
b
l
d
e
f
l_3
d_1
e_1
f_1
l_4

N — low-pressure version
S — medium-pressure version
OCY — galvanized steel
KWS — stainless steel
ALU — aluminium
a — width
b — height
l — length
d — take-off diameter
e — take-off offset in length
f — take-off offset in width
l_3 — take-off height (default l_3 = 100 mm)
d_1 — take-off diameter
e_1 — take-off offset in length
f_1 — take-off offset in width
l_4 — take-off height

If all dimensions of both take-off ports are identical, they are aligned according to the default sizing.

ALNOR® ventilation systems
is a registered trademark protected by a technical patent. All modification rights reserved.

T-pieces with round take-off
TR2

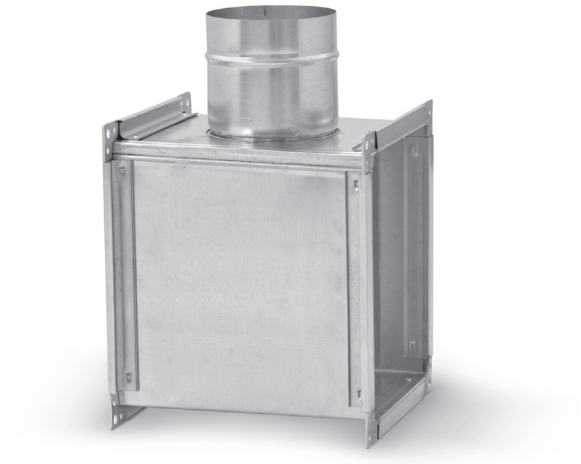

Dimensions

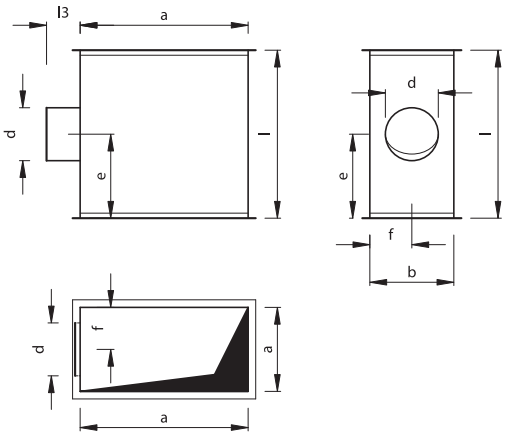

Description

All T-pieces with round take-offs are fitted with flange frames made of sheet angles and braced by cross-wise ribbing.
The round take-off port is coaxial in the standard version.
The standard round take-off port is male; the TRL2 version is available on request with male connector fitted with gaskets.

Available materials — Product code examples
TR2 -...-...-...-...-... — galvanized steel sheet
TR2-...-K-...-...-...-... — 1.4301/304 stainless steel sheet
TR2-...-K-...-...-...-...-316L — 1.4404/316L stainless steel sheet
TR2-...-A-...-...-...-... — AW-1050A H24 aluminium sheet

Product code example
Product code: **TR2 - N - OCY - 500x300 - 250 - 160 - 30 - 60 - 100**

type
N
S
OCY
KWS
ALU
a
b
l
d
e
f
l_3

N — low-pressure version
S — medium-pressure version
OCY — galvanized steel
KWS — stainless steel
ALU — aluminium
a — width
b — height
l — length
d — diameter
e — offset in length
f — offset in width
l_3 — take-off length (default l_3 = 100 mm)

The standard versions are made in default dimension sizes which do not have to be specified.

ALNOR® ventilation systems
is a registered trademark protected by a technical patent. All modification rights reserved.

Four-way pieces with square take-offs
CZ1

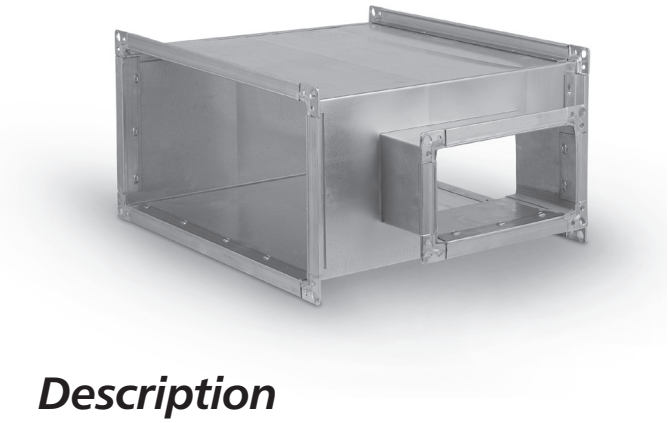

Dimensions

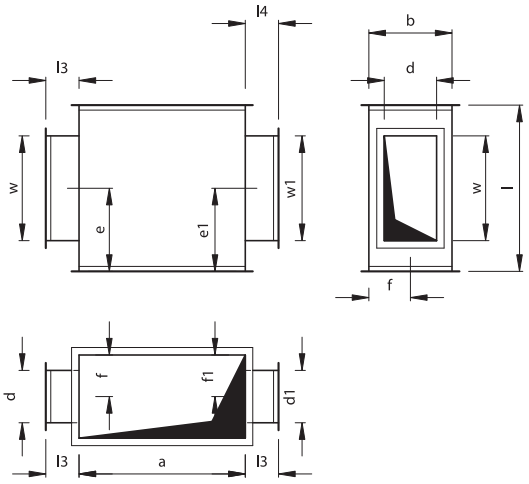

Description

The four-way piece ends are fitted with sheet angles, and the entire fitting is braced by cross-wise ribbing.

This fitting allows building ductwork with branches taken off at 90 degrees.

Available materials — Product code examples

CZ1-...-...-...-...-... — galvanized steel sheet
CZ1-...-K-...-...-...-... — 1.4301/304 stainless steel sheet
CZ1-...-K-...-...-...-... - 316L — 1.4404/316L stainless steel sheet
CZ1-...-A-...-...-...-... — AW-1050A H24 aluminium sheet

Product code example

Product code: **CZ1-N-OCY-500x300-400-200x150-200-150-100-100-80-60-60-100**

type	
N	— low-pressure version
S	— medium-pressure version
OCY	— galvanized steel
KWS	— stainless steel
ALU	— aluminium
a	— width
b	— height
l	— length
w	— take-off length
d	— take-off width
e	— take-off offset in length
f	— take-off offset in width
l_3	— take-off height (default l_3 = 100 mm)
w_1	— take-off length
d_1	— take-off width
e_1	— take-off offset in length
f_1	— take-off offset in width
l_4	— take-off height (default l_4 = 100 mm)

If all dimensions of both take-off ports are identical, they are aligned according to the default sizing.

ALNOR® ventilation systems
is a registered trademark protected by a technical patent. All modification rights reserved.

Wye tee
TR3

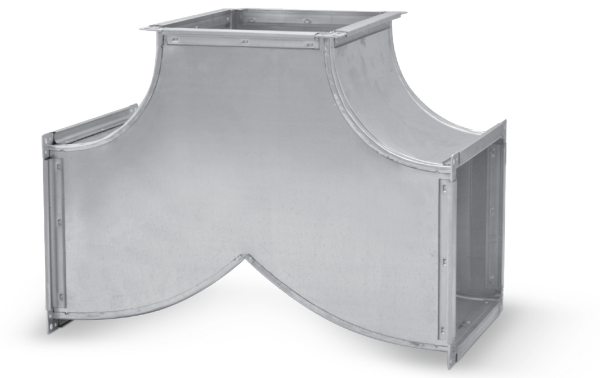

Dimensions

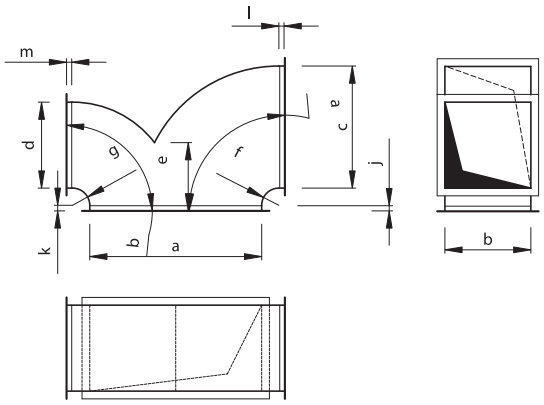

Description

The wye tees are fitted with sheet angles, and the entire fitting is braced by cross-wise ribbing. This fitting allows building the ductwork with two take-offs set at any angle.
The width may vary between the two take-off ports.
Vanes can be installed.

Available materials — Product code examples

TR3-...-...-...-...-... — galvanized steel sheet

TR3-...-K-...-...-...-... — 1.4301/304 stainless steel sheet

TR3-...-K-...-...-...-...-316L — 1.4404/316L stainless steel sheet

TR3-...-A-...-...-...-... — AW-1050A H24 aluminium sheet

Product code example

Product code: **TR3-N-OCY-500x300-300-200-100-120-120-90-90-30-30-30-30**

type
N
S
OCY
KWS
ALU
a
b
c
d
e
f
g
β
α
j
k
l
m

N — low-pressure version
S — medium-pressure version
OCY — galvanized steel
KWS — stainless steel
ALU — aluminium
a — width
b — height
c — take-off 1 height
d — take-off 2 height
e — base length
f — radius (default f = 120 mm)
g — radius (default g = 120 mm)
β — angle (default α = 90°)
α — angle (default α = 90°)
j — extension (default j = 30 mm)
k — extension (default k = 30 mm)
l — extension (default l = 30 mm)
m — extension (default m = 30 mm)

ALNOR® ventilation systems
is a registered trademark protected by a technical patent. All modification rights reserved.

Wye tee

TR5



Description

The wye tee (pant) are fitted with sheet angles, and the entire fitting is braced by cross-wise ribbing.
The wye te divides the air flow between two parallel legs.

Available materials — Product code examples

TR5-...-...-...-...-... — galvanized steel sheet

TR5-...-K-...-...-...-... — 1.4301/304 stainless steel sheet

TR5-...-K-...-...-...-...-316L — 1.4404/316L stainless steel sheet
TR5-...-A-...-...-...-... — AW-1050A H24 aluminium sheet

Dimensions

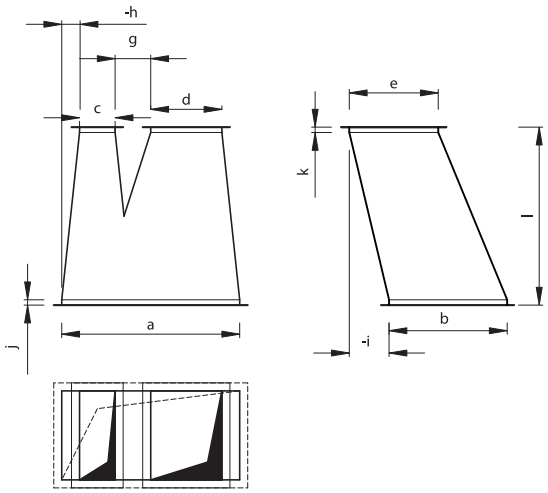

Product code example

Product code: **TR5 - N - OCY - 500x300 - 100 - 200 - 200 - 600 - 60 - 40 - 60 - 20 - 20**

type	
N	— low-pressure version
S	— medium-pressure version
OCY	— galvanized steel
KWS	— stainless steel
ALU	— aluminium
a	— height
b	— inlet width
c	— left-hand clear height
d	— right-hand clear height
e	— outlet width
l	— length
g	— take-off spacing
h	— horizontal offset
i	— vertical offset
j	— extension (default j = 30 mm)
k	— extension (default k = 30 mm)

ALNOR® ventilation systems
is a registered trademark protected by a technical patent. All modification rights reserved.

T-pieces with take-off bend

TR4



Dimensions

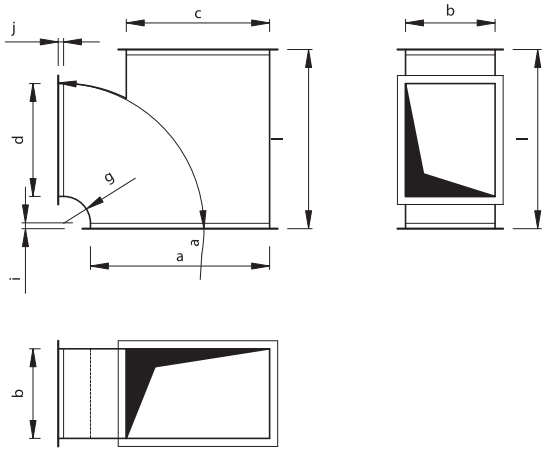

Description

All T-pieces with take-off bends are fitted with flange frames made of sheet angles and braced by cross-wise ribbing.
A take-off bend provides smooth distribution of air without increasing the flow turbulence due to the presence of a vane.

Available materials — Product code examples

TR4-...-...-...-...-... — galvanized steel sheet

TR4-...-K-...-...-...-... — 1.4301/304 stainless steel sheet

TR4-...-K-...-...-...-...-316L — 1.4404/316L stainless steel sheet

TR4-...-A-...-...-...-... — AW-1050A H24 aluminium sheet

Product code example

Product code: **TR4 - N - OCY - 500x300 - 300 - 200 - 600 - 20 - 90 - 30 - 30**

type	
N	— low-pressure version
S	— medium-pressure version
OCY	— galvanized steel
KWS	— stainless steel
ALU	— aluminium
a	— width
b	— height
c	— clear height
d	— take-off height
l	— length
g	— radius (default g = 120 mm)
α	— angle (default α = 90°)
j	— extension (default j = 30 mm)
k	— extension (default k = 30 mm)

ALNOR® ventilation systems
is a registered trademark protected by a technical patent. All modification rights reserved.

Round duct T-connectors

TR6

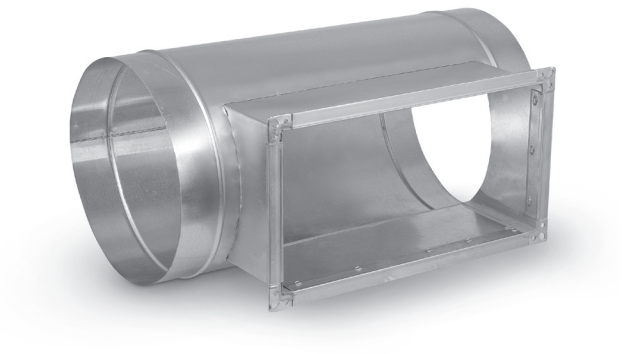

Dimensions

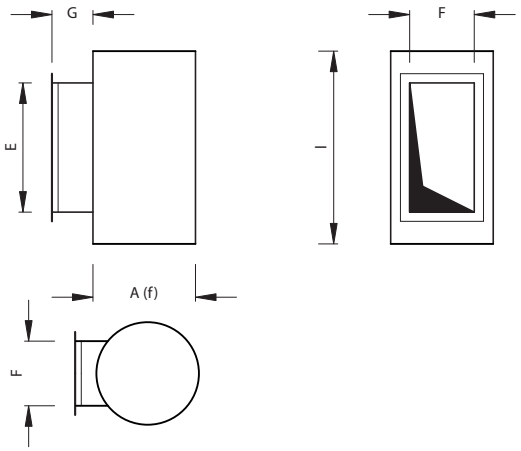

Description

The T-connectors allow building a T-connection between a round and a square duct. One end features a flange frame of sheet angles or a hemmed flange. The round duct ends are provided with hemming for sheet screws in the standard version.
T-connectors can be fabricated as a fully round T-pieces on request.

Available materials — Product code examples

TR6-...-...-...-...-... — galvanized steel sheet

TR6-...-K-...-...-...-... — 1.4301/304 stainless steel sheet

TR6-...-K-...-...-...-...-316L — 1.4404/316L stainless steel sheet

TR6-...-A-...-...-...-... — AW-1050A H24 aluminium sheet

Product code example

Product code: **TR6 - N - OCY - 630 - 500 - 250x400 - 60**

type
- N
- S

OCY
KWS
ALU
- a
- l
- e
- f
- g

N — low-pressure version
S — medium-pressure version
OCY — galvanized steel
KWS — stainless steel
ALU — aluminium
a — duct diameter
l — round duct length
e — take-off length
f — take-off width
g — take-off height

The standard versions are made in default dimension sizes which do not have to be specified.

ALNOR® ventilation systems
is a registered trademark protected by a technical patent. All modification rights reserved.

Rectangular flexible duct connector
QILA



Dimensions

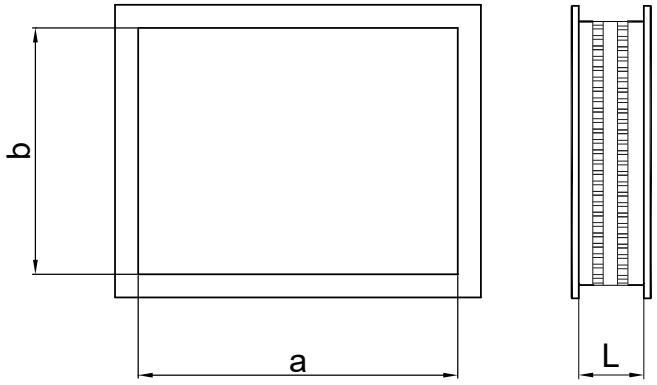

Max. width a: 2500 mm.
Max. height b: 2500 mm

Standard lengths - L -of the flexible duct connector: 130, 150 or 240 mm
(depending on the AMT flexible connetion used for production)

Description

Flexible duct connector for rectangular ducts and elements. It is made of PQ flange channel and NQ corners interconnected by AMT flexible connection. Rectangular flexible duct connectors can be used to join ventilation ducts but above all it is used to eliminate vibrations caused by air handling units and fans. The design of the AMT flexible duct connector (a joint consisting of a layer of fabric and two strips of sheet metal on both sides)ensures very good airtightness.

Available materials

QILA -…-…-… - galvanized steel sheet, PVC coated fabric
QILA- -HI-T-…-…-… - galvanised steel sheet, silicone coated fabric
QILA-PU-…-…-… - galvanised steel sheet, polyurethane (PU) coated fabric
QILA-K-PU-…-…-… - stainless steel polyurethane (PU) coated
QILA-NEP-…-…-… - galvanised steel sheet, neoprene coated fabric

Example identification

Product code: **QILA-PU - aaa - bbb - ccc**

type
length
width a
height b

Technical Data

	Temperature range	*Characteristics*
PVC	-30 °C / +80 °C	General use, economical choic
Silicone (HI-T)	-30 °C / +260 °C	Resistance to high temperatures , high resistance to aging, weather conditions and chemical substances
Polyurethane (PU)	-30 °C / +180 °C	High abrasion resistance
Neoprene	-30 °C / +180 °C	Synthetic rubber, suitable for outdoor use, High resistance to alkalis and petrol.

AMT flexible connection used for flexible duct connectors' production was tested at 400 °C for 2 hours (PU and HI-T material). None of the tested flexible duct connectors suffered mechanical damage due to the heat treatment.

ALNOR® ventilation systems
is a registered trademark protected by a technical patent. All modification rights reserved.

End caps
QES



Description

The end caps stops square duct ends.
The product is made from galvanized steel sheet.
The flange is made of sheet angles.

Available materials — Product code examples
QES-...-...-... -...-... — galvanized steel sheet

QES-...-K-...-...-.. .-... — 1.4301/304 stainless steel sheet

QES-...-K-...-...-... -... - 16L — 1.4404/316L stainless steel sheet
QES-...-A-...-...-...-... — AW-1050A H24 aluminium sheet

Product code example

Product code **QES – N – C – 500 × 300 – 30**

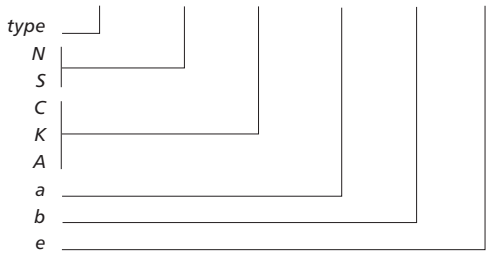

N — *low-pressure version*
S — *medium-pressure version*
C — *galvanized steel*
K — *stainless steel*
A — *aluminium*
a — *width*
b — *height*
e — *extension (default e = 30 mm)*

The standard versions are made in default dimension sizes which do not have to be specified.

Dimensions

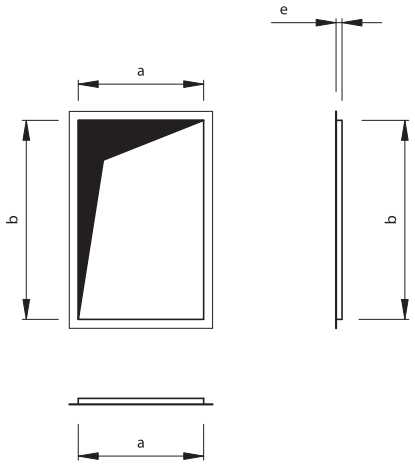

ALNOR® ventilation systems
is a registered trademark protected by a technical patent. All modification rights reserved.

Download Wentyle
Download AlnorCAM
B2B ordering

Pre-insulated ducts and fittings IZOL® system

ALNOR reserves the right to modify technical specifications in line with the policy of continuous product improvement.

ALNOR® ventilation systems
is a registered trademark protected by a technical patent. All modification rights reserved.

Pre-insulated
TECHNICAL INFORMATION

Introduction

This is ALNOR's range of insulated square ducts and fittings of the IZOL® system.
The IZOL® system is a registered tradename of pre-insulated ventilation ducts and fittings for indoor and outdoor systems. All system components are provided with inner and outer steel sheet cladding, and a thermal-insulation layer in between.
The nominal diameter range of 100-500 mm always refers to the inner diameter of ducts and fittings.

Insulation
There are 3 types of insulation available:

- 25 mm insulation — the nominal insulation system is 25 mm, and the actual value ranges from 15 to 32 mm; the insulating layer is fitted tightly against the inner and outer cladding which define the product's size according to the SPIRAL® system sizing series.
- 50 mm insulation — the nominal insulation system is 50 mm, and the actual value ranges from 35 to 60 mm; the insulating layer is fitted tightly against the inner and outer cladding which define the product's size according to the SPIRAL® system sizing series.
- 100 mm insulation — the nominal insulation system is 100 mm, and the actual value ranges from 75 to 140 mm; the insulating layer is fitted tightly against the inner and outer cladding which define the product's size according to the SPIRAL® system sizing series.

Cladding
The inner and outer cladding are made from galvanized steel sheet.

Installation instructions

1. Connection
If the insulating layer is on the exterior, it is critical to provide it with a cover to prevent insulation thinning and breaking off. This can be achieved using e.g. dedicated MSFK sealing clamps which help to ensure that joints have the required strength and airtightness based on EPDM rubber.

2. Ductwork mounting
Pre-insulated ducts are usually installed with balancing tapes and suspension rings, similarly to regular (non-insulated) ductwork systems.

Marking

ALNOR products carry the Polish conformity mark B for construction products and product codes as shown in the technical specifications listed in this catalogue.

Round ducts and fittings of the IZOL® system are certified for compliance with hygiene standards - Hygiene Certificate HK/B/1652/02/2007.

A leak-proof ductwork

The inner ducts and fittings of the IZOL® system are included in the SPIRAL® system.
The SPIRAL® system is a tried and tested system of quick-coupled spiral ducts and fittings provided with factory-installed EPDM gaskets. The gaskets provide leak-proof and durable joints between SPIRAL® system components. The system is available in a full range of diameter sizes.
The SPIRAL® system meets the requirements of EN 12237 for air tightness class D (Certificate no. 0103/07).
The high-quality of workmanship and factory-installed rubber gaskets enable easy and quick assembly of ventilation ductwork. A ductwork based on SPIRAL® system components guarantees long and leak-proof service life and requires no additional sealants.

is a registered trademark protected by a technical patent. All modification rights reserved.

Tolerance limits for ducts

$Ød_{nom}$ [mm]	min. - max. diameter $Ød_{nom\ min}$ - $Ød_{nom\ max}$ [mm]
80	80.0 – 80.5
100	100.0 – 100.5
112	112.0 – 112.5
125	125.0 – 125.5
132	132.0 – 132.5
140	140.0 – 140.6
150	150.0 – 150.6
157	157.0 – 157.6
160	160.0 – 160.6
180	180.0 – 180.7
192	192.0 – 192.7
200	200.0 – 200.7
224	224.0 – 224.8
232	232.0 – 232.8
250	250.0 – 250.8
280	280.0 – 280.9
300	300.0 – 300.9
315	315.0 – 315.9
355	355.0 – 356.0
400	400.0 – 401.0
450	450.0 – 451.1
500	500.0 – 501.1
560	560.0 – 561.2

The IZOL®system meets the tolerance limits given in the table above for the ducts to provide the required sealing performance.
The diameter sizes made with thinner sheets are reinforced by double ribbing, which corresponds to
t = + 0.2 mm.
Ød per PN-EN 1506: 2001

Tolerance limits for fittings

$Ød_{nom}$ [mm]	min. - max. diameter $Ød_{nom\ min}$ - $Ød_{nom\ max}$ [mm]
80	78.8 – 79.3
100	98.8 – 99.3
112	110.8–111.7
125	123.8 – 124.3
132	130.8–131.3
140	138.7 – 139.3
150	148.7 – 149.3
157	155.7–156.3
160	158.7 – 159.3
180	178.6 – 179.3
192	190.6–191.3
200	198.6 – 199.3
224	222.5 – 223.3
232	230.5–231.3
250	248.5 – 249.3
280	278.4 – 279.3
300	298.4 – 299.3
315	313.4 – 314.3
355	353.3 – 354.3
400	398.3 – 399.3
450	448.2 – 449.3
500	498.2 – 499.3
560	558.1 – 559.3

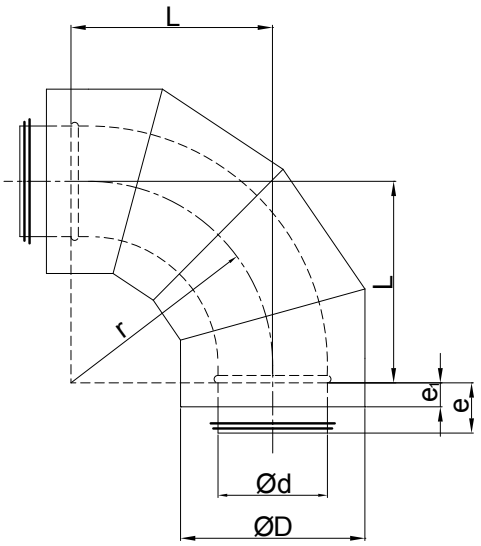

Ød nom. [mm]	e [mm]	e_1 [mm]	Tolerance limits e, e_1 [mm]	
80–224	36	20	0	-5
250–355	55	20	0	-5
400–560	75	35	0	-10

ALNOR® venitlation systems
is a registered trademark protected by a technical patent. All modification rights reserved.

Pre-insulated

TECHNICAL INFORMATION

Dimensions

25 mm insulation			*50 mm insulation*			*100 mm insulation*		
Inner dia. Ød (mm)	*Outer dia. ØD (mm)*	*Actual insulation thickness (mm)*	*Inner dia. Ød (mm)*	*Outer dia. ØD (mm)*	*Actual insulation thickness (mm)*	*Inner dia. Ød (mm)*	*Outer dia. ØD (mm)*	*Actual insulation thickness (mm)*
80	125	22.5	80	180	50	80	280	100
100	150	25	100	200	50	100	300	100
125	180	27.5	125	224	49.5	125	315	95
140	200	30	140	250	55	140	355	107.5
150	200	25	150	250	50	150	355	102.5
160	224	32	160	250	60	160	355	97.5
180	224	22	180	280	50	180	400	110
200	250	25	200	300	50	200	400	100
224	280	28	224	315	45.5	224	450	113
250	300	25	250	355	52.5	250	450	100
280	315	17.5	280	400	60	280	500	110
300	355	27.5	300	400	50	300	500	100
315	355	20	315	400	42.5	315	500	92.5
355	400	22.5	355	450	47.5	355	560	102.5
400	450	25	400	500	50	400	300	100
450	500	25	450	560	55	450	630	90
500	560	30	500	600	50	500	710	105
560	600	20	560	630	35	560	710	75
600	630	15	600	710	55	600	800	100
			630	710	40	630	800	85
			710	800	45	710	900	95
			800	900	50	800	1000	100
			900	1000	50	900	1120	110
						1000	1250	125
						1120	1400	140
						1250	1500	125
						1400	1600	100

ALNOR® venitlation systems
is a registered trademark protected by a technical patent. All modification rights reserved.

SPRI

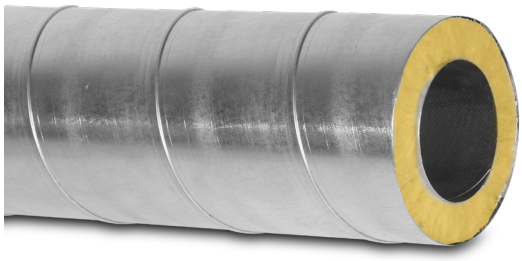

Dimensions

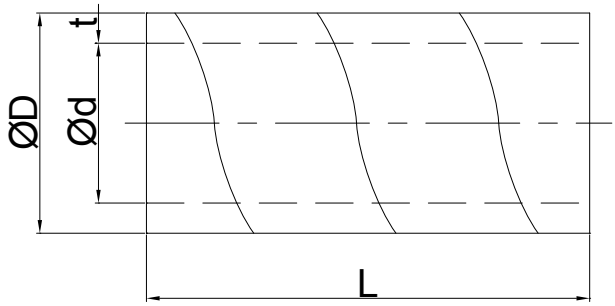

Description

The standard duct length is 3000 mm; the sheet thickness for a given diameter is the same as that for the SPR spiral coiled ducts.
The ducts of diameter 250 mm or greater feature outer ribbing to improve the robustness and vacuum pressure strength.

Thermal conductivity:

- isolation 25 mm - 0,037 W/mk unchanging time
- isolation 50 mm - 0,042 W/mk unchanging time

Product code example

Product code: **SPRI - 25 - 200**

type
Insulation
Ød

25 mm insulation

Ød [mm]	ØD [mm]	Weight [kg/m]	Ød [mm]	ØD [mm]	Weight [kg/m]
100	150	3.6	250	300	8.5
125	180	4.7	280	315	9.0
140	200	5.0	300	355	11.4
150	200	5.1	315	355	11.5
160	224	5.9	355	400	14.1
180	224	6.3	400	450	15.9
200	250	6.6	450	500	17.3
224	280	7.7	500	560	21.0

50 mm insulation

Ød [mm]	ØD [mm]	Weight [kg/m]	Ød [mm]	ØD [mm]	Weight [kg/m]
100	200	4.9	250	355	11.5
125	224	6.0	280	400	12.9
140	250	6.6	300	400	13.5
150	250	6.7	315	400	13.6
160	280	7.4	355	450	16.5
180	280	7.9	400	500	18.0
200	300	8.6	450	560	22.3
224	315	9.3	500	600	23.3

100 mm insulation

Ød [mm]	ØD [mm]	Weight [kg/m]	Ød [mm]	ØD [mm]	Weight [kg/m]
100	300	24.1	250	450	44.2
125	315	26.2	280	500	49.3
140	355	32.5	300	500	50.1
150	355	32.9	315	500	50.8
160	355	33.3	355	560	64.7
180	400	37.5	400	600	70.3
200	400	38.4	450	630	75.4
224	450	43.1	500	710	84.6

ALNOR® venitlation systems
is a registered trademark protected by a technical patent. All modification rights reserved.

Pre-insulated perforated ducts

SPRPI



Description

Pre-insulated round spiral perforated ducts are available in diameters of DN 80 mm to 630 mm, and with outer corrugation of DN 250 mm or greater to improve stiffness and vacuum strength.

Product code example

Product code: **SPRPI - 25 - 200**

type
Insulation
Ød

Dimensions

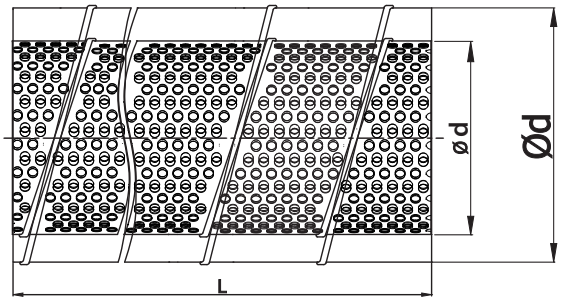

25 mm insulation			
Ød [mm]	*ØD [mm]*	*Ød [mm]*	*ØD [mm]*
100	150	250	300
125	180	280	315
140	200	300	355
150	200	315	355
160	224	355	400
180	224	400	450
200	250	450	500
224	280	500	560

50 mm insulation			
Ød [mm]	*ØD [mm]*	*Ød [mm]*	*ØD [mm]*
100	200	250	355
125	224	280	400
140	250	300	400
150	250	315	400
160	280	355	450
180	280	400	500
200	300	450	560
224	315	500	600

100 mm insulation			
Ød [mm]	*ØD [mm]*	*Ød [mm]*	*ØD [mm]*
100	300	250	450
125	315	280	500
140	355	300	500
150	355	315	500
160	355	355	560
180	400	400	600
200	400	450	630
224	450	500	710

ALNOR® venitlation systems
is a registered trademark protected by a technical patent. All modification rights reserved.

IZOL®system pre-insulated bends

BSLI-90



Description

All BSLI pre-insulated bends consist of an inner duct bend with an EPDM gasket and an outer duct bend without gaskets.

Product code example

Product code: **BSLI - 25 - 200 - 90**

type
Insulation
Ød
angle

Dimensions

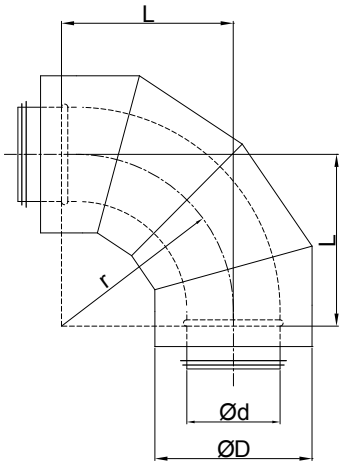

25 mm insulation					
Ød [mm]	ØD [mm]	Weight [kg/m]	Ød [mm]	ØD [mm]	Weight [kg/m]
100	150	1.5	250	300	6.0
125	180	2.1	280	315	7.6
140	200	2.6	300	355	9.3
150	200	2.7	315	355	10.4
160	224	2.9	355	400	12.7
180	224	3.0	400	450	15.7
200	250	4.0	450	500	23.2
224	280	4.8	500	560	24.0

50 mm insulation					
Ød [mm]	ØD [mm]	Weight [kg/m]	Ød [mm]	ØD [mm]	Weight [kg/m]
100	200	2.4	250	355	9.3
125	224	3.1	280	400	12.1
140	250	4.1	300	400	12.3
150	250	4.2	315	400	13.6
160	250	5.0	355	450	16.9
180	280	5.2	400	500	20.5
200	300	5.9	450	560	25.1
224	315	7.4	500	600	35.9

100 mm insulation					
Ød [mm]	ØD [mm]	Weight [kg/m]	Ød [mm]	ØD [mm]	Weight [kg/m]
100	300	3.2	250	450	14.5
125	315	3.9	280	500	16.3
140	355	5.2	300	500	16.5
150	355	5.4	315	500	17.6
160	355	6.1	355	560	19.5
180	400	6.4	400	600	29.5
200	400	7.5	450	630	32.2
224	450	9.6	500	710	45.1

ALNOR® venitlation systems
is a registered trademark protected by a technical patent. All modification rights reserved.

IZOL®system pre-insulated bends

BSLI-60



Description

All BSLI pre-insulated bends consist of an inner duct bend with an EPDM gasket and an outer duct bend without gaskets.

Product code example

Product code: **BSLI - 25 - 200 - 60**

type
Insulation
Ød
angle

Dimensions

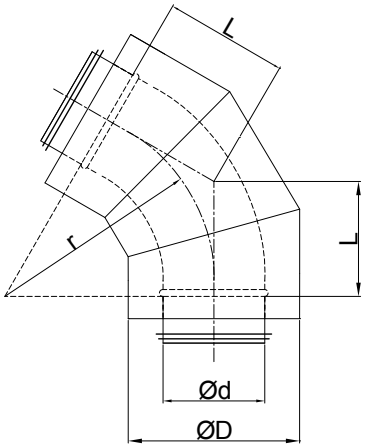

25 mm insulation					
Ød [mm]	ØD [mm]	Weight [kg/m]	Ød [mm]	ØD [mm]	Weight [kg/m]
100	150	1.1	250	300	4.5
125	180	1.6	280	315	5.5
140	200	1.8	300	355	6.7
150	200	1.9	315	355	7.5
160	224	2.1	355	400	9.8
180	224	2.3	400	450	12.1
200	250	2.7	450	500	14.3
224	280	4.0	500	560	17.6

50 mm insulation					
Ød [mm]	ØD [mm]	Weight [kg/m]	Ød [mm]	ØD [mm]	Weight [kg/m]
100	200	1.8	250	355	6.7
125	224	2.2	280	400	8.8
140	250	3.0	300	400	9.0
150	250	3.1	315	400	10.0
160	250	3.6	355	450	12.2
180	280	3.8	400	500	14.8
200	300	4.3	450	560	18.0
224	315	5.4	500	600	25.5

100 mm insulation					
Ød [mm]	ØD [mm]	Weight [kg/m]	Ød [mm]	ØD [mm]	Weight [kg/m]
100	300	2.6	250	450	9.1
125	315	2.8	280	500	11.5
140	355	3.9	300	500	12.6
150	355	4.3	315	500	16.5
160	355	4.6	355	560	17.5
180	400	5.1	400	600	18.6
200	400	5.3	450	630	24.5
224	450	7.5	500	710	36.6

ALNOR® venitlation systems
is a registered trademark protected by a technical patent. All modification rights reserved.

IZOL®system pre-insulated bends

BSLI-45



Description

All BSLI pre-insulated bends consist of an inner duct bend with an EPDM gasket and an outer duct bend without gaskets.

Product code example

Product code: **BSLI - 25 - 200 - 45**

type
Insulation
Ød
angle

Dimensions

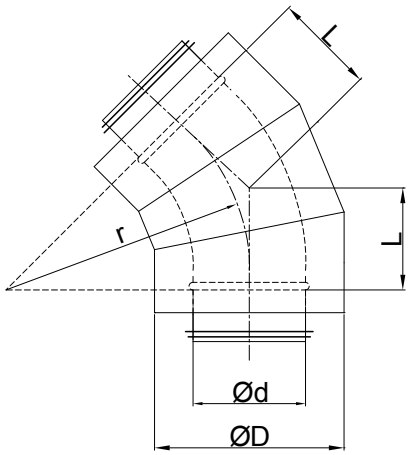

25 mm insulation					
Ød [mm]	ØD [mm]	Weight [kg/m]	Ød [mm]	ØD [mm]	Weight [kg/m]
100	150	1.0	250	300	3.7
125	180	1.3	280	315	4.6
140	200	1.6	300	355	5.6
150	200	1.7	315	355	6.2
160	224	1.9	355	400	8.1
180	224	2.0	400	450	10.0
200	250	2.4	450	500	11.6
224	280	3.3	500	560	14.4

50 mm insulation					
Ød [mm]	ØD [mm]	Weight [kg/m]	Ød [mm]	ØD [mm]	Weight [kg/m]
100	200	1.5	250	355	5.6
125	224	1.8	280	400	7.3
140	250	2.5	300	400	7.5
150	250	2.6	315	400	8.3
160	250	3.1	355	450	10.1
180	280	3.2	400	500	12.1
200	300	3.6	450	560	14.7
224	315	4.5	500	600	20.6

100 mm insulation					
Ød [mm]	ØD [mm]	Weight [kg/m]	Ød [mm]	ØD [mm]	Weight [kg/m]
100	300	1.9	250	450	9.5
125	315	2.3	280	500	11.5
140	355	3.4	300	500	11.9
150	355	3.9	315	500	12.6
160	355	4.5	355	560	13.5
180	400	4.7	400	600	16.4
200	400	5.4	450	630	17.5
224	450	6.9	500	710	29.5

ALNOR® venitlation systems
is a registered trademark protected by a technical patent. All modification rights reserved.

IZOL®system pre-insulated bends

BSLI-30



Description

All BSLI pre-insulated bends consist of an inner duct bend with an EPDM gasket and an outer duct bend without gaskets.

Product code example

Product code: **BSLI - 25 - 200 - 30**

type
Insulation
Ød
angle

Dimensions

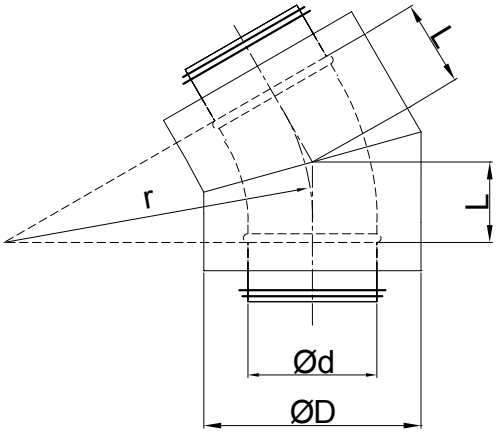

25 mm insulation					
Ød [mm]	*ØD [mm]*	*Weight [kg/m]*	*Ød [mm]*	*ØD [mm]*	*Weight [kg/m]*
100	150	0.8	250	300	2.8
125	180	1.0	280	315	3.5
140	200	1.2	300	355	4.1
150	200	1.3	315	355	4.7
160	224	1.3	355	400	6.1
180	224	1.5	400	450	7.6
200	250	1.8	450	500	8.5
224	280	2.5	500	560	10.7

50 mm insulation					
Ød [mm]	*ØD [mm]*	*Weight [kg/m]*	*Ød [mm]*	*ØD [mm]*	*Weight [kg/m]*
100	200	1.1	250	355	4.2
125	224	1.4	280	400	5.5
140	250	2.0	300	400	5.7
150	250	2.1	315	400	6.3
160	250	2.3	355	450	6.7
180	280	2.4	400	500	9.1
200	300	2.7	450	560	10.9
224	315	3.4	500	600	15.2

100 mm insulation					
Ød [mm]	*ØD [mm]*	*Weight [kg/m]*	*Ød [mm]*	*ØD [mm]*	*Weight [kg/m]*
100	300	1.5	250	450	6.5
125	315	1.9	280	500	7.5
140	355	2.9	300	500	7.8
150	355	2.9	315	500	9.5
160	355	3.8	355	560	12.6
180	400	3.9	400	600	14.5
200	400	4.1	450	630	15.6
224	450	4.6	500	710	21.5

ALNOR® venitlation systems
is a registered trademark protected by a technical patent. All modification rights reserved.

IZOL®system pre-insulated bends

BSLI-15



Description

All BSLI pre-insulated bends consist of an inner duct bend with an EPDM gasket and an outer duct bend without gaskets.

Product code example

Product code: **BSLI - 25 - 200 - 15**

type
Insulation
Ød
angle

Dimensions

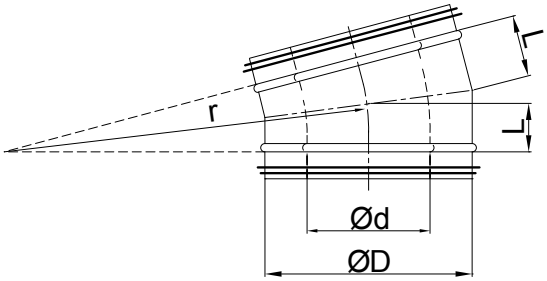

25 mm insulation					
Ød [mm]	*ØD [mm]*	*Weight [kg/m]*	*Ød [mm]*	*ØD [mm]*	*Weight [kg/m]*
100	150	0.6	250	300	2.1
125	180	0.7	280	315	2.5
140	200	0.9	300	355	3.0
150	200	0.9	315	355	3.4
160	224	1.0	355	400	4.5
180	224	1.1	400	450	5.5
200	250	1.3	450	500	5.8
224	280	1.9	500	560	7.4

50 mm insulation					
Ød [mm]	*ØD [mm]*	*Weight [kg/m]*	*Ød [mm]*	*ØD [mm]*	*Weight [kg/m]*
100	200	0.8	250	355	3.0
125	224	1.0	280	400	4.1
140	250	1.5	300	400	4.2
150	250	1.6	315	400	4.6
160	250	1.7	355	450	5.5
180	280	1.8	400	500	6.4
200	300	2.0	450	560	7.6
224	315	2.5	500	600	10.3

100 mm insulation					
Ød [mm]	*ØD [mm]*	*Weight [kg/m]*	*Ød [mm]*	*ØD [mm]*	*Weight [kg/m]*
100	300	1.2	250	450	3.6
125	315	1.3	280	500	4.7
140	355	1.8	300	500	4.9
150	355	1.9	315	500	5.6
160	355	2.0	355	560	6.5
180	400	2.2	400	600	7.8
200	400	2.4	450	630	9.6
224	450	3.1	500	710	14.5

ALNOR® venitlation systems
is a registered trademark protected by a technical patent. All modification rights reserved.

IZOL®system pre-insulated reducers

RSCLLI



Description

All RSCLLI pre-insulated reducers consist of an inner reducer with an EPDM gasket and an outer reducer without gaskets.

Product code example

Product code: **RSCLLI - 25 - 200 - 125**

- type
- Insulation
- Ød1
- Ød2

Dimensions

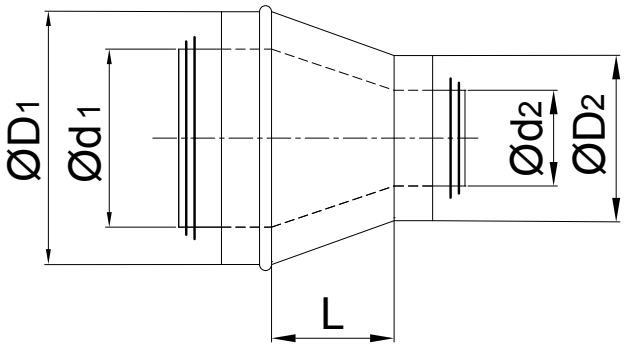

25 mm insulation					
$Ød_1$ [mm]	$ØD_1$ [mm]	$Ød_2$ [mm]	$ØD_2$ [mm]	L [mm]	Weight [kg]
125	100	180	150	64	0.9
140	100	200	150	85	1
140	125	200	180	51	0.9
150	100	200	150	99	1.2
150	125	200	180	64	1
150	140	200	200	44	0.9
160	100	224	150	112	1.3
160	125	224	180	78	1.2
160	140	224	200	57	1.1
160	150	224	200	44	1
200	100	250	150	167	2
200	125	250	180	133	1.9
200	140	250	200	112	1.8
200	150	250	200	99	1.6
200	160	250	224	85	1.6
200	180	250	224	58	1.4
224	100	280	150	200	2.4
224	125	280	180	166	2.2
224	140	280	200	145	2.3
224	150	280	200	132	2.2
224	160	280	224	118	2.2
224	180	280	224	90	2
224	200	280	250	63	1.9
250	100	300	150	236	3.1
250	125	300	180	202	3
250	140	300	200	181	2.8
250	150	300	200	167	2.7
250	160	300	224	154	2.7
250	180	300	224	126	2.4
250	200	300	250	99	2.4
250	224	300	280	66	2.2

ALNOR® venitlation systems
is a registered trademark protected by a technical patent. All modification rights reserved.

IZOL®system pre-insulated reducers

RSCLLI

Dimensions

25 mm insulation					
$Ød_1$ [mm]	$ØD_1$ [mm]	$Ød_2$ [mm]	$ØD_2$ [mm]	L [mm]	Weight [kg]
280	125	315	180	243	3.9
280	140	315	200	222	3.8
280	150	315	200	209	3.6
280	160	315	224	195	3.5
280	180	315	224	167	3.3
280	200	315	250	140	3.2
280	224	315	280	107	3
280	250	315	300	71	2.8
300	125	355	180	270	4.5
300	140	355	200	250	4.4
300	150	355	200	236	4.3
300	160	355	224	222	4.2
300	180	355	224	195	3.9
300	200	355	250	167	3.8
300	224	355	280	135	3.7
300	280	355	315	58	3.3
315	100	355	150	310	5.2
315	125	355	180	291	5.1
315	140	355	200	270	5.1
315	150	355	200	257	5.5
315	160	355	224	243	4.8
315	180	355	224	216	4.5
315	200	355	250	188	4.4
315	224	355	280	155	4
315	250	355	300	119	3.8
250	140	300	200	181	2.8
250	150	300	200	167	2.7
250	160	300	224	154	2.7
250	180	300	224	126	2.4
250	200	300	250	99	2.4
250	224	300	280	66	2.2
315	280	355	315	78	3.5
315	300	355	355	51	3.2
355	160	400	224	298	6.4
355	180	400	224	270	6.1
355	200	400	250	243	5.8
355	224	400	280	224	5.7
355	250	400	300	174	5.3
355	280	400	315	133	4.9
355	300	400	355	106	4.6
355	315	400	355	85	4.4

25 mm insulation					
$Ød_1$ [mm]	$ØD_1$ [mm]	$Ød_2$ [mm]	$ØD_2$ [mm]	L [mm]	Weight [kg]
400	160	450	224	365	8.3
400	180	450	224	337	7.9
400	200	450	250	310	7.7
400	224	450	280	277	7.4
400	250	450	300	241	7.1
400	280	450	315	200	6.8
400	300	450	355	172	6.4
400	315	450	355	152	6.1
400	355	450	400	97	5.6
450	200	500	250	378	9.8
450	224	500	280	346	9.5
450	250	500	300	310	9.1
450	280	500	315	269	8.7
450	300	500	355	241	8.3
450	315	500	355	221	7.8
450	355	500	400	166	7.3
450	400	500	450	109	6.7
500	224	560	280	414	11.6
500	250	560	300	378	11.3
500	280	560	315	337	10.9
500	300	560	355	310	10.5
500	315	560	400	289	10.2
500	355	560	400	234	9.5
500	400	560	450	177	8.8
500	450	560	500	109	7.8

ALNOR® venitlation systems
is a registered trademark protected by a technical patent. All modification rights reserved.

IZOL® system pre-insulated reducers

RSCLLI

Dimensions

50 mm insulation					
$Ød_1$ [mm]	$ØD_1$ [mm]	$Ød_2$ [mm]	$ØD_2$ [mm]	L [mm]	Weight [kg]
125	100	224	200	64	1.1
140	100	250	200	85	1.4
140	125	250	224	51	1.3
150	100	250	200	99	1.6
150	125	250	224	64	1.4
150	140	250	250	44	1.3
160	100	280	200	112	1.8
160	125	280	224	78	1.7
160	140	280	250	57	1.6
160	150	280	250	44	1.4
200	100	300	200	167	2.5
200	125	300	224	133	2.3
200	140	300	250	112	2.2
200	150	300	250	99	2.1
200	160	300	280	85	2
200	180	300	280	58	1.8
224	100	315	200	200	3.4
224	125	315	224	166	3.1
224	140	315	250	145	3
224	150	315	250	132	2.9
224	160	315	280	118	2.8
224	180	315	280	90	2.5
224	200	315	300	63	2.3
250	100	355	200	236	4.3
250	125	355	224	202	4
250	140	355	250	181	3.8
250	150	355	250	167	3.7
250	160	355	280	154	3.6
250	180	355	280	126	3.3
250	200	355	300	99	3.1
250	224	355	315	66	2.8
280	125	400	224	243	5.3
280	140	400	250	222	5.2
280	150	400	250	209	5.1
280	160	400	280	195	5
280	180	400	280	167	4.6
280	200	400	300	140	4.3
280	224	400	315	107	3.9
280	250	400	355	71	3.6

50 mm insulation					
$Ød_1$ [mm]	$ØD_1$ [mm]	$Ød_2$ [mm]	$ØD_2$ [mm]	L [mm]	Weight [kg]
300	125	400	224	270	5.7
300	140	400	250	250	5.6
300	150	400	250	236	5.4
300	160	400	280	222	5.3
300	180	400	280	195	5
300	200	400	300	167	4.7
300	224	400	315	135	4.6
300	250	400	355	99	4.3
315	250	400	355	119	4.6
315	280	400	400	78	4.2
315	300	400	400	51	3.8
355	160	450	280	298	7.7
355	180	450	280	270	7.4
355	200	450	300	243	6.9
355	224	450	315	224	6.7
355	250	450	355	174	6.0
355	280	450	400	133	5.7
355	300	450	400	106	5.3
355	315	450	400	85	5.0
400	160	500	280	365	9.9
400	180	500	280	337	9.5
400	200	500	300	310	9.1
400	224	500	315	277	8.6
400	250	500	355	241	8.3
400	280	500	400	200	7.8
400	300	500	400	172	7.2
400	315	500	400	152	6.2
400	355	500	450	97	6.1
450	200	560	300	378	11.5
450	224	560	315	346	11.2
450	250	560	355	310	10.6
450	280	560	400	269	10
450	300	560	400	241	9.5
450	315	560	400	221	9.1
450	355	560	450	166	8.2
450	400	560	500	109	7.4
500	200	600	300	447	16.8
500	224	600	315	414	15.7
500	250	600	355	378	15.2
500	280	600	400	337	15.0
500	300	600	400	310	13.9
500	315	600	400	289	13.4
500	355	600	450	234	12.1
500	400	600	500	177	10.9
500	450	600	560	109	9.2

ALNOR® venitlation systems
is a registered trademark protected by a technical patent. All modification rights reserved.

RSCLLI

Dimensions

100 mm insulation					
$Ød_1$ [mm]	$ØD_1$ [mm]	$Ød_2$ [mm]	$ØD_2$ [mm]	L [mm]	Weight [kg]
125	100	315	300		
140	100	355	300		
140	125	355	315		
150	100	355	300		
150	125	355	315		
150	140	355	355		
160	100	355	300		
160	125	355	315		
160	140	355	355		
160	150	355	355		
200	100	400	300		
200	125	400	315		
200	140	400	355		
200	150	400	355		
200	160	400	355		
200	180	400	400		
224	100	450	300		
224	125	450	315		
224	140	450	355		
224	150	450	355		
224	160	450	355		
224	180	450	400		
224	200	450	400		
250	100	450	300		
250	125	450	315		
250	140	450	355		
250	150	450	355		
250	160	450	355		
250	180	450	400		
250	200	450	400		
250	224	450	450		
280	125	500	315		
280	140	500	355		
280	150	500	355		
280	160	500	355		
280	180	500	400		
280	200	500	400		
280	224	500	450		
280	250	500	450		

100 mm insulation					
$Ød_1$ [mm]	$ØD_1$ [mm]	$Ød_2$ [mm]	$ØD_2$ [mm]	L [mm]	Weight [kg]
300	125	500	315		
300	140	500	355		
300	150	500	355		
300	160	500	355		
300	180	500	400		
300	200	500	400		
300	224	500	450		
300	250	500	450		
315	250	500	450		
315	280	500	500		
315	300	500	500		
355	160	560	355		
355	180	560	400		
355	200	560	400		
355	224	560	450		
355	250	560	450		
355	280	560	500		
355	300	560	500		
355	315	560	500		
400	160	600	355		
400	180	600	400		
400	200	600	400		
400	224	600	450		
400	250	600	450		
400	280	600	500		
400	300	600	500		
400	315	600	500		
400	355	600	560		
450	200	630	400		
450	224	630	450		
450	250	630	450		
450	280	630	500		
450	300	630	500		
450	315	630	500		
450	355	630	560		
450	400	630	600		
500	200	710	400		
500	224	710	450		
500	250	710	450		
500	280	710	500		
500	300	710	500		

ALNOR® venitlation systems
is a registered trademark protected by a technical patent. All modification rights reserved.

IZOL® system pre-insulated T-pieces

TPCLI



Description

All TPCLI pre-insulated T-pieces consist of an inner T-piece with an EPDM gasket and an outer T-piece without gaskets.

Product code example

Product code: **TPCLI - 25 - 200 - 125**

- Type
- Insulation
- Ød¹
- Ød$_2$

Dimensions

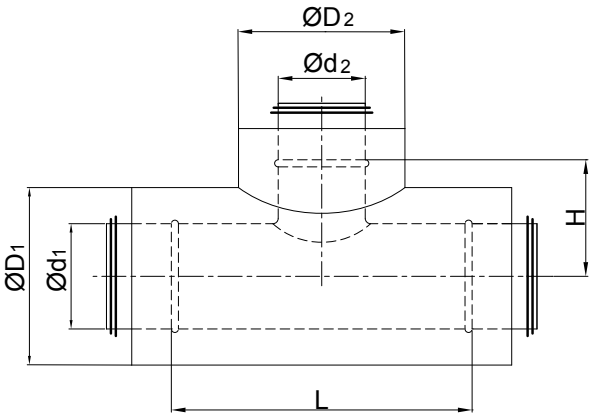

25 mm insulation						
Ød$_1$ [mm]	ØD$_1$ [mm]	Ød$_2$ [mm]	ØD$_2$ [mm]	L [mm]	H [mm]	Weight [kg]
100	100	150	150	210	95	1.2
125	100	180	150	210	108	1.4
125	125	180	180	235	108	1.6
140	100	200	150	210	115	1.6
140	125	200	180	235	115	1.7
140	140	200	200	250	115	1.8
150	100	200	150	210	120	1.4
150	125	200	180	235	120	1.8
150	140	200	200	250	120	1.8
150	150	200	200	260	120	1.9
160	100	224	150	210	125	1.9
160	125	224	180	235	125	2.0
160	140	224	200	250	125	2.2
160	150	224	200	260	125	2.2
160	160	224	224	270	125	2.3
180	100	224	150	210	135	2.5
180	125	224	180	235	135	2.9
180	140	224	200	250	135	3.2
180	150	224	200	260	135	3.2
180	160	224	224	270	135	3.4
180	180	224	224	290	135	3.4
200	100	250	150	210	145	3.0
200	125	250	180	235	145	3.6
200	140	250	200	250	145	3.5
200	150	250	200	260	145	3.5
200	160	250	224	270	145	4.1
200	180	250	224	290	145	4.2
200	200	250	250	310	145	4.7

ALNOR® venitlation systems
is a registered trademark protected by a technical patent. All modification rights reserved.

TPCLI

Dimensions

25 mm insulation						
$Ød_1$ [mm]	$ØD_1$ [mm]	$Ød_2$ [mm]	$ØD_2$ [mm]	L [mm]	H [mm]	Weight [kg]
224	100	280	150	210	157	3.5
224	125	280	180	235	157	4.2
224	140	280	200	250	157	3.8
224	150	280	200	260	157	4.2
224	160	280	224	270	157	4.6
224	180	280	224	290	157	3.7
250	100	280	150	210	170	3.9
250	125	280	180	235	170	4.5
250	140	280	200	250	170	4.6
250	150	280	200	260	170	4.7
250	160	280	224	270	170	4.9
250	180	280	224	290	170	5
250	200	280	250	310	170	4
250	250	280	300	360	170	5.4
280	100	315	150	230	185	4.6
280	125	315	180	255	185	4.9
280	140	315	200	270	185	5.3
280	150	315	200	280	185	5.5
280	160	315	224	290	185	5.6
280	180	315	224	310	185	5.7
280	200	315	250	330	185	5.7
300	100	355	150	230	195	5.1
300	125	355	180	255	195	5.4
300	140	355	200	270	195	5.7
300	150	355	200	280	195	5.8
300	160	355	224	290	195	6.4
300	180	355	224	310	195	5.9
300	200	355	250	330	195	6.3
300	250	355	300	380	195	7.1
315	100	355	150	230	203	5.7
315	125	355	180	255	203	6
315	140	355	200	270	203	6.4
315	150	355	200	280	203	6.3
315	160	355	224	290	203	6.8
315	180	355	224	310	203	7
315	200	355	250	330	203	7.1
315	250	355	300	380	203	7.8
355	160	400	224	290	222	7.4
355	200	400	250	330	222	7.9
400	200	450	250	330	245	9.5
450	160	500	224	290	270	9.9
450	200	500	250	330	270	10.5
500	200	560	250	330	295	12.8

50 mm insulation						
$Ød_1$ [mm]	$ØD_1$ [mm]	$Ød_2$ [mm]	$ØD_2$ [mm]	L [mm]	H [mm]	Weight [kg]
100	100	200	200	281	125	2.5
125	100	224	200	346	137	3.2
125	125	224	224	346	137	3.4
140	100	250	200	306	150	3.5
140	125	250	224	350	150	4.1
140	140	250	250	307	150	3.9
150	100	250	200	306	150	3.7
150	125	250	224	350	150	4.2
150	140	250	250	307	150	3.9
150	150	205	250	307	150	3.9
160	100	280	200	306	165	4.0
160	125	280	224	350	165	4.5
160	140	280	250	380	165	4.5
160	150	280	250	380	165	4.5
180	100	280	200	306	165	4.1
180	125	280	224	350	165	4.6
180	140	280	250	380	165	4.6
180	150	280	250	380	165	4.6
200	100	300	200	306	175	4.4
200	125	300	224	350	172	4.9
200	140	300	250	350	175	4.9
200	150	300	250	350	175	4.9
224	100	315	200	306	182	7.8
224	125	315	224	350	182	5.7
224	140	315	250	350	182	5.7
224	150	315	250	350	182	5.7
224	224	315	315	390	182	6.6
250	100	355	200	306	203	5.7
250	125	355	224	350	203	6.2
250	150	355	250	350	203	6.4
250	224	355	315	455	203	7.8
280	100	400	200	300	225	7.3
280	125	400	224	350	225	7.6
280	140	400	250	350	225	7.3
280	150	400	250	350	225	7.4
280	224	400	315	415	225	8.8
300	100	400	200	300	225	7
300	125	400	224	350	225	7.7
300	140	400	250	350	225	7.8
300	150	400	250	350	225	7.9
300	224	400	315	415	225	9

ALNOR® venitlation systems
is a registered trademark protected by a technical patent. All modification rights reserved.

IZOL® system pre-insulated T-pieces

TPCLI

Dimensions

50 mm insulation						
$Ød_1$ [mm]	$ØD_1$ [mm]	$Ød_2$ [mm]	$ØD_2$ [mm]	L [mm]	H [mm]	Weight [kg]
315	100	400	200	300	225	7.7
315	125	400	224	350	225	8.5
315	140	400	250	350	225	8.5
315	150	400	250	350	225	8.6
315	224	400	315	415	225	9.8
315	315	400	400	500	225	11.8
355	224	400	315	415	250	10.9
355	315	450	450	500	250	12.9
400	100	500	200	300	275	9.7
400	125	500	224	300	275	10.1
400	224	500	315	415	275	12.1
400	315	500	400	500	275	14.4
450	100	560	200	360	305	12.1
450	315	560	400	590	305	17.9
500	100	600	200	360	340	15.5
500	315	600	400	590	340	22.6

100 mm insulation						
$Ød_1$ [mm]	$ØD_1$ [mm]	$Ød_2$ [mm]	$ØD_2$ [mm]	L [mm]	H [mm]	Weight [kg]
160	150	355	355			
180	100	355	300			
180	125	355	315			
180	140	355	355			
180	150	355	355			
200	100	400	300			
200	125	400	315			
200	140	400	355			
200	150	400	355			
224	100	450	300			
224	125	450	315			
224	140	450	355			
224	150	450	355			
224	224	450	450			
250	100	450	300			
250	125	450	315			
250	150	450	355			
250	224	450	450			
280	100	500	300			
280	125	500	315			
280	140	500	355			
280	150	500	355			
280	224	500	450			
300	100	500	300			
300	125	500	315			
300	140	500	355			
300	150	500	355			
300	224	500	450			
315	100	500	300			
315	125	500	315			
315	140	500	355			
315	150	500	355			
315	224	500	450			
315	315	500	500			
355	224	560	450			
355	315	560	500			
400	100	600	300			
400	125	600	315			
400	224	600	450			

ALNOR® venitlation systems
is a registered trademark protected by a technical patent. All modification rights reserved.

IZOL®system pre-insulated male connectors
NSLI

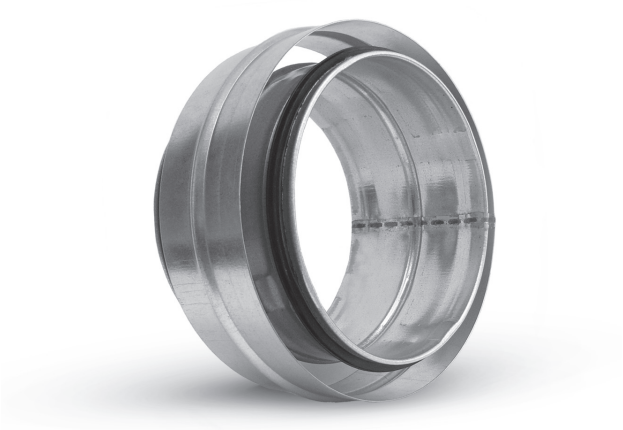

Description

The NSLI male connectors are designed for coupling SPRI ducts together.

Product code example

Product code: **NSLI - 25 - 200**

type
Insulation
Ød

Dimensions

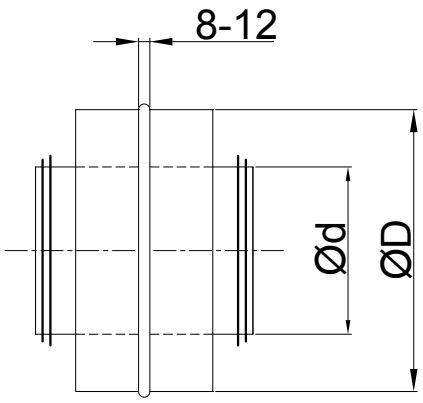

25 mm insulation					
Ød [mm]	*ØD [mm]*	*Weight [kg/m]*	*Ød [mm]*	*ØD [mm]*	*Weight [kg/m]*
100	150	0.4	250	300	1.2
125	180	0.6	280	315	1.6
140	200	0.7	300	355	1.9
150	200	0.7	315	355	1.9
160	224	0.8	355	400	2.1
180	224	0.8	400	450	2.9
200	250	0.9	450	500	3.4
224	280	1.0	500	560	3.8

50 mm insulation					
Ød [mm]	*ØD [mm]*	*Weight [kg/m]*	*Ød [mm]*	*ØD [mm]*	*Weight [kg/m]*
100	200	0.5	250	355	1.4
125	224	0.6	280	400	1.9
140	250	0.8	300	400	2.0
150	250	0.8	315	400	2.0
160	250	0.9	355	450	2.3
180	280	1.0	400	500	3.2
200	300	1.1	450	560	3.6
224	315	1.2	500	600	4.9

100 mm insulation					
Ød [mm]	*ØD [mm]*	*Weight [kg/m]*	*Ød [mm]*	*ØD [mm]*	*Weight [kg/m]*
100	300	0.5	250	450	1.2
125	315	0.5	280	500	1.4
140	355	0.7	300	500	1.4
150	355	0.7	315	500	1.4
160	355	0.8	355	560	2.0
180	400	0.8	400	600	2.2
200	400	0.9	450	630	2.5
224	450	1.2	500	710	3.8

ALNOR® venitlation systems
is a registered trademark protected by a technical patent. All modification rights reserved.

IZOL® system pre-insulated female connectors

MSFI



Description

The MSFI female connectors are designed for coupling fittings.

Product code example

Product code: **MSFI - 25 - 200**

typ
insulation
Ød

Dimensions

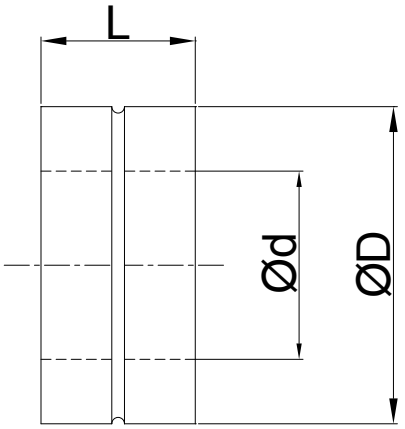

25 mm insulation							
Ød [mm]	ØD [mm]	L [mm]	Weight [kg]	Ød [mm]	ØD [mm]	L [mm]	Weight [kg]
100	150	90	0.4	250	300	135	1.3
125	180	90	0.5	280	315	135	1.5
140	200	90	0.5	300	355	135	1.7
150	200	90	0,5	315	355	135	1.8
160	224	90	0,6	355	400	175	2.4
180	224	90	0,6	400	450	175	3.0
200	250	135	0,9	450	500	175	3.4
224	280	135	1,0	500	560	175	3.8

50 mm insulation							
Ød [mm]	ØD [mm]	L [mm]	Weight [kg]	Ød [mm]	ØD [mm]	L [mm]	Weight [kg]
100	200	90	0,5	250	355	135	1.7
125	224	90	0,6	280	400	135	2.5
140	250	90	1,0	300	400	135	2.6
150	250	135	1,1	315	400	135	2.8
160	250	135	1,2	355	450	175	3.2
180	280	135	1,2	400	500	175	3.5
200	300	135	1,3	450	560	175	4.0
224	315	135	1,5	500	600	175	5.1

100 mm insulation							
Ød [mm]	ØD [mm]	L [mm]	Weight [kg]	Ød [mm]	ØD [mm]	L [mm]	Weight [kg]
100	300		0,7	250	450		1.7
125	315		0,7	280	500		1.9
140	355		0,9	300	500		1.9
150	355		1,1	315	500		1.9
160	355		1,2	355	560		2.9
180	400		1,2	400	600		3.6
200	400		1,4	450	630		3.9
224	450		1,7	500	710		4.8

ALNOR® venitlation systems
is a registered trademark protected by a technical patent. All modification rights reserved.

IZOL® system pre-insulated fitting female end caps
CPFI



Description

The CPFI is designed for stopping fittings.

Product code example

Product code: **CPFI - 25 - 200**

type
insulation
Ød

Dimensions

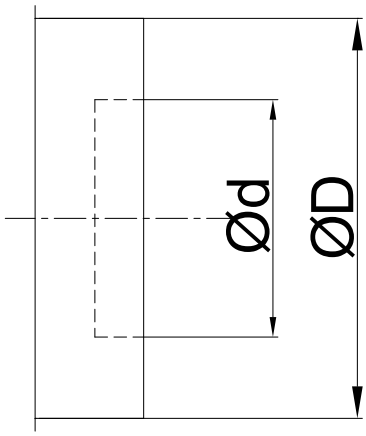

25 mm insulation					
Ød [mm]	ØD [mm]	Weight [kg/m]	Ød [mm]	ØD [mm]	Weight [kg/m]
100	150	0.4	250	300	1.5
125	180	0.5	280	315	1.8
140	200	0.6	300	355	2.1
150	200	0.6	315	355	2.2
160	224	0.7	355	400	2.6
180	224	0.9	400	450	3.2
200	250	1.0	450	500	3.8
224	280	1.2	500	560	4.1

50 mm insulation					
Ød [mm]	ØD [mm]	Weight [kg/m]	Ød [mm]	ØD [mm]	Weight [kg/m]
100	200	0.6	250	355	2.1
125	224	0.7	280	400	2.2
140	250	0.9	300	400	2.3
150	250	1.0	315	400	2.6
160	250	1.1	355	450	3.3
180	280	1.2	400	500	3.5
200	300	1.3	450	560	4.5
224	315	1.7	500	600	4.8

100 mm insulation					
Ød [mm]	ØD [mm]	Weight [kg/m]	Ød [mm]	ØD [mm]	Weight [kg/m]
100	300	0.9	250	450	2.6
125	315	0.9	280	500	2.9
140	355	1.4	300	500	2.9
150	355	1.6	315	500	2.9
160	355	1.8	355	560	3.6
180	400	1.9	400	600	3.9
200	400	1.9	450	630	4.7
224	450	2.2	500	710	6.4

ALNOR® venitlation systems
is a registered trademark protected by a technical patent. All modification rights reserved.

IZOL® system pre-insulated duct male end caps

CSLI



Description

The CSLI is designed for stopping ducts.

Product code example

Product code: **CSLI - 25 - 200**

type
insulation
Ød

Dimensions

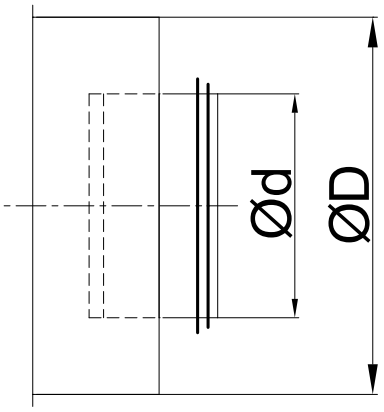

25 mm insulation					
Ød [mm]	ØD [mm]	Weight [kg/m]	Ød [mm]	ØD [mm]	Weight [kg/m]
100	150	0.4	250	300	1.5
125	180	0.5	280	315	1.8
140	200	0.6	300	355	2.1
150	200	0.6	315	355	2.2
160	224	0.7	355	400	2.6
180	224	0.9	400	450	3.2
200	250	1.0	450	500	3.8
224	280	1.2	500	560	4.1

50 mm insulation					
Ød [mm]	ØD [mm]	Weight [kg/m]	Ød [mm]	ØD [mm]	Weight [kg/m]
100	200	0.6	250	355	2.1
125	224	0.7	280	400	2.2
140	250	0.9	300	400	2.3
150	250	1.0	315	400	2.6
160	250	1.1	355	450	3.3
180	280	1.2	400	500	3.5
200	300	1.3	450	560	4.5
224	315	1.7	500	600	4.8

100 mm insulation					
Ød [mm]	ØD [mm]	Weight [kg/m]	Ød [mm]	ØD [mm]	Weight [kg/m]
100	300	0.9	250	450	2.6
125	315	0.9	280	500	2.9
140	355	1.4	300	500	2.9
150	355	1.6	315	500	2.9
160	355	1.8	355	560	3.6
180	400	1.9	400	600	3.9
200	400	1.9	450	630	4.7
224	450	2.2	500	710	6.4

ALNOR® venitlation systems
is a registered trademark protected by a technical patent. All modification rights reserved.

DASLI



Description

The DASLI dampers can be installed in ductwork systems which do not require full air tightness. The damper blade position is read from the control handle, which can be locked in position with screws.

Product code example

Product code: **DASLI - 25 - 200**

type
insulation
Ød

Dimensions

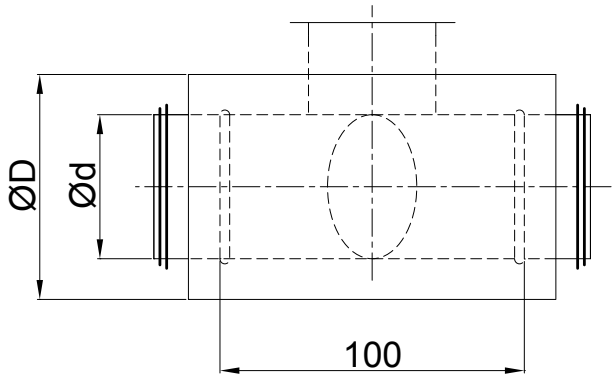

25 mm insulation					
Ød [mm]	ØD [mm]	Weight [kg]	Ød [mm]	ØD [mm]	Weight [kg]
100	150	0.9	250	300	2.5
125	180	1.1	280	315	3.1
140	200	1.2	300	355	3.4
150	200	1.3	315	355	3.7
160	224	1.4	355	400	4.4
180	224	1.5	400	450	5.5
200	250	1.9	450	500	6.5
224	280	2.1	500	560	7.4

50 mm insulation					
Ød [mm]	ØD [mm]	Weight [kg]	Ød [mm]	ØD [mm]	Weight [kg]
100	200	1.2	250	355	3.2
125	224	1.4	280	400	4.1
140	250	1.7	300	400	4.3
150	250	1.8	315	400	4.6
160	250	1.9	355	450	5.2
180	280	2.0	400	500	6.2
200	300	2.0	450	560	7.3
224	315	2.7	500	600	9.3

100 mm insulation					
Ød [mm]	ØD [mm]	Weight [kg]	Ød [mm]	ØD [mm]	Weight [kg]
100	300	1.5	250	450	3.9
125	315	1.8	280	500	4.2
140	355	2.1	300	500	4.3
150	355	2.4	315	500	4.5
160	355	2.6	355	560	5.1
180	400	2.8	400	600	5.7
200	400	3.0	450	630	6.2
224	450	3.5	500	710	6.5

ALNOR® venitlation systems
is a registered trademark protected by a technical patent. All modification rights reserved.

Download Wentyle
Download AlnorCAM
Order at B2B

Ducts and fittings insulated with rubber foam FOAM System

The manufacturer reserves the right to amend product dimensions and technical data due to their constant improvement.

ALNOR® ventilation systems
is a legally protected trademark and technical patent. All rights reserved.

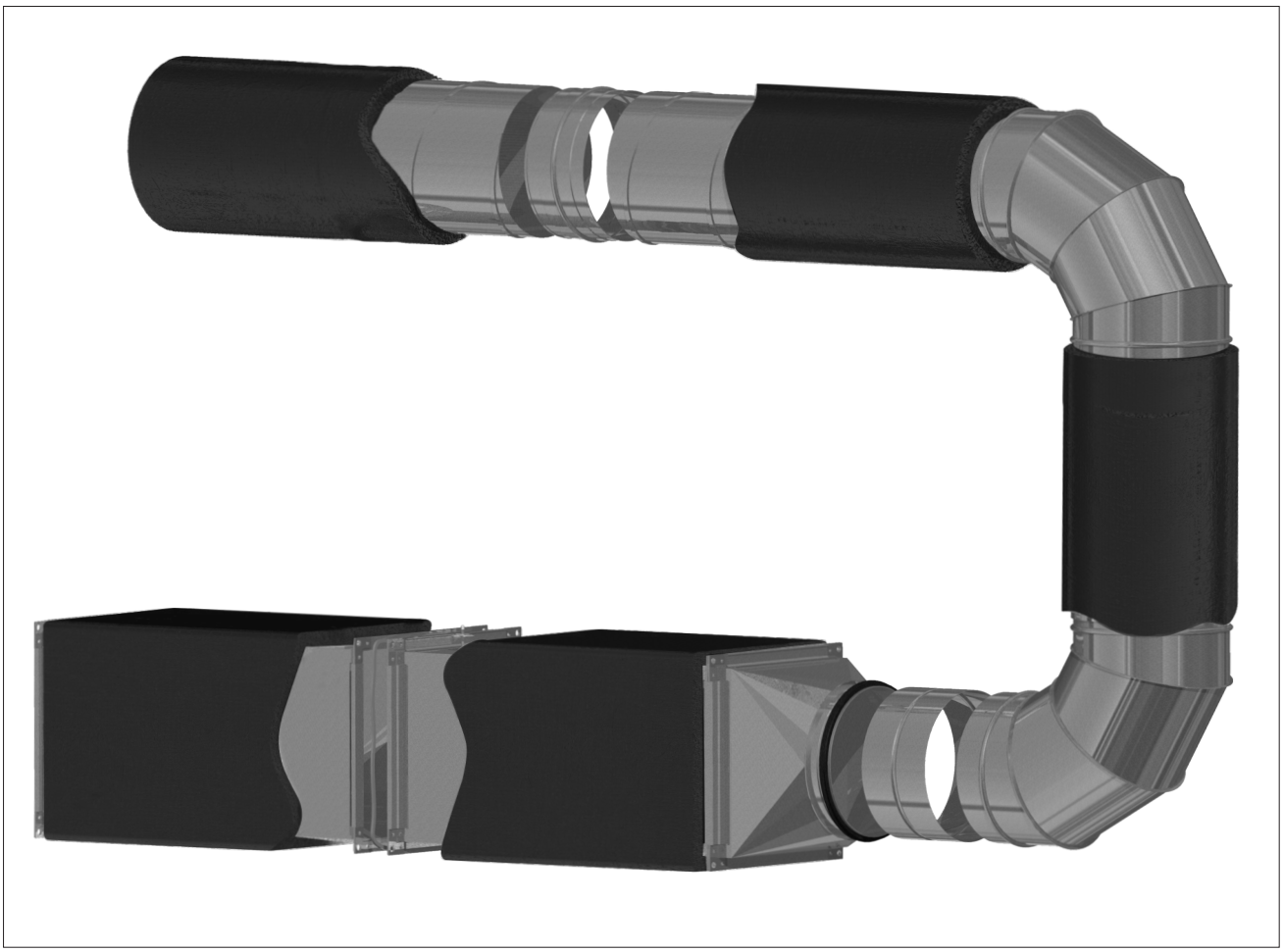

About the system

The ventilation and air conditioning ducts and fittings insulated with rubber mat constitute the complete **FOAM System** piping. It consists of round spiro pipes and ventilation fittings: elbows, T-pipes, reducing pipes, joints and stub pipes. The inner diameters comply with the standard round elements according to the following tolerances. The insulation made of rubber mat is available in 4 sizes: 9, 13, 19 and 25 mm.

Markings

ALNOR company products are labelled with construction product marking as well as the product code compliant with the technical specification in the present technical catalogue.

Tolerance for ducts

$Ød_{nom}$ [mm]	$Ød_{min.}$ - $Ød_{max.}$ [mm]
80	80,0 - 80,5
100	100,0 - 100,5
125	125,0 - 125,5
150	150,0 - 150,6
160	160,0 - 160,6
200	200,0 - 200,7
250	250,0 - 250,8

FOAM System is based on the aforementioned tolerances for ducts, so as to ensure the sufficient system tightness. Diameters of elements made of sheet, in accordance with PN-EN-1506:2001

ALNOR® ventilation systems
is a registered trademark protected by a technical patent. All modification rights reserved.

About the system

Tolerance for fittings

$Ød_{nom}$ [mm]	$Ød_{min.}$ - $Ød_{max.}$ [mm]
80	78,8 - 79,3
100	98,8 - 99,3
125	123,8 - 124,3
150	148,7 - 149,3
160	158,7 - 159,3
200	198,6 - 199,3
250	248,5 - 249,3

Dimension and angle tolerances

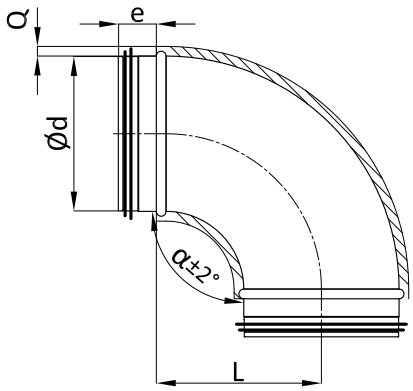

Length L, r, r_m	Tolerance
≤ 15	± 3
(15; 100	± 7
> 100	+ 10 - 15
L (ducts)	± 0,5%

System tightness

Internal system ducts and fittings of the FOAM System constitute elements of the SPIRAL®system.
The SPIRAL®system is a universal system of spirally wound ventilation ducts and fittings with the factory-fixed rubber EPDM gasket. The gasket ensures insulation class D (certificate No. 0103/07) in accordance with PN-EN 12237

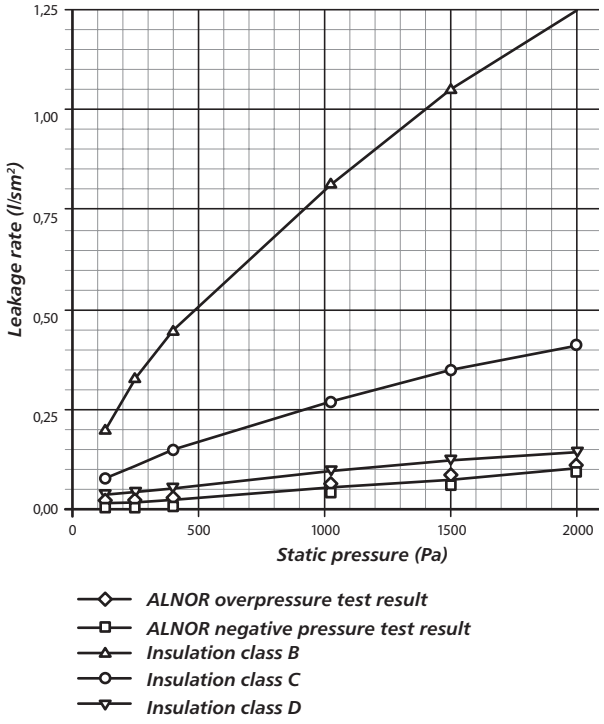

All the SPIRAL®system components are checked in terms of the gasket's quality according to the following procedure.

SPIRAL®system gasket check:
- Visual check of the surface quality.
- Check of the inner gasket diameter is important while using different types of materials.
- Check of the gasket profile dimensions and check of the dimensions in accordance with the assumed tolerances.
- Deformation test in the case of a simulated joint, using a device. Gasket flexibility test which ensures ultimate and accurate sealing.

Round ducts and fittings with the **SPIRAL®system** gasket are approved by RISE (formerly SITAC) for insulation class D.

ALNOR® ventilation systems
is a registered trademark protected by a technical patent. All modification rights reserved.

Insulation

The mat, which is made of flexible foam with closed pores, based on synthetic rubber, has temperature insulation properties. It is assembled directly on round fittings and ducts applied for ventilation and air conditioning. Owing to this we benefit with time savings while assembling the insulated systems at the construction site.

Technical parameters:
Insulation thickness: 9/13/19/25mm - tolerance according to EN 14304
Flammability class: (EN 13501-1) B1 (B s3-d0)
Thermal conductivity (EN 12667):
for -30°C: ≤ 0.034 [W/mK]
for 0°C: ≤ 0.036 [W/mK]
for 40°C: ≤ 0.040 [W/mK]

Rubber gaskets

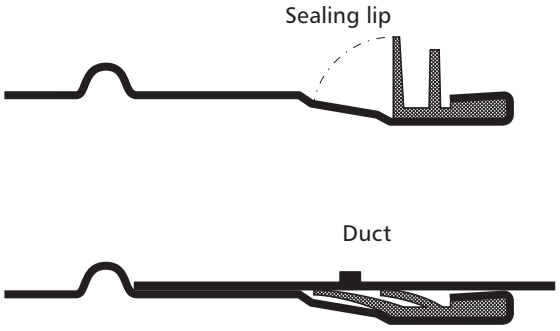

The gasket used is based on the homogenous EPDM rubber. The gasket is placed at the end of the fitting and tightly fixed along the fitting's circumference on the doubled-over fitting edge. This guarantees that the gasket, irrespective of the assembly conditions, always remains in place.

The rubber gasket must meet high quality requirements, therefore we have chosen the EPDM rubber. This material is extremely resistant to the impact of ozone as well as UV radiation and temperature fluctuations, thus ensuring long life.

Assembly instructions

The whole system is assembled as ordinary round ventilation ducts and fittings.
The nipple elements are inserted into the pipe or sleeve fitting until it is stopped on the rollover. Then, according to the following instructions, the lap screws are mounted after lifting the rubber mat.
The rubber mat from both elements is cut in such a way as to press one against the other after the assembly without additional insulation of the joints. If, despite this, the joint is required - the recommendation is as follows:
The TAPV-B self-adhesive tape – black PVC, 50 mm wide – perfect for joining two rubber mat covers with one another.
Rubber tape - self-adhesive, can ensure the additional thermal sealing of the joints.

Before the assembly
The pipe must be clean before the assembly.

Duct cutting
The ducts should be carefully cut, at an appropriate angle, then the edges should be cleaned of any shavings (blunted).

Assembly of fittings
- Check whether the ducts and fittings are not damaged. Pay particular attention to the gasket.
- Insert the gasket into the pipe until the stop is reached. Gently rotate the device for easy insertion.
- Fix the element to the duct by means of sheet-metal screws and rivets.
  For the proper fitting, maintain the appropriate order of assembly of the sheet-metal screws and rivets. Cross-assembly is recommended.
- The recommended thicknesses of rivets and sheet-metal screws are presented below:

Ød [mm]	*min. diameter [mm]*	*number of screws*
140 - 250	3,2	4

Arrange the sheet-metal screws evenly around the whole circumference, making sure that the gasket is not damaged, i.e. placing them 10 mm away from the edge of the duct and the stop on the element. In the event of the improper assembly, the holes after rivets or sheet-metal screws should be sealed.



is a registered trademark protected by a technical patent. All modification rights reserved.

Rubber foam insulated ducts

F..-SPR-C

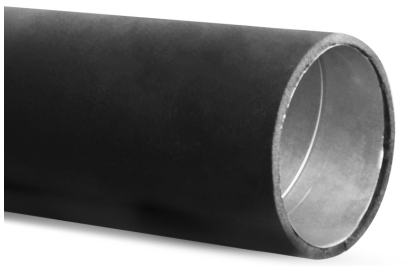

Description

The rubber-insulated spiral ducts are ideal for quickly assembled ventilation and air-conditioning systems. Owing to the factory-fitted rubber foam insulation, our time at the construction site is saved. The ventilation ducts are available in 1- and 2-metre sections, and in 9, 13, 19 and 25 mm insulation thickness.

Marking example

Product code: **F09 - SPR - C - 100 - 2**

- rubber thickness Q:
  - 09
  - 13
  - 19
  - 25
- type
- sheet:
  - galvanised C
  - stainless steel K
  - aluminium A
- diameter
- length L:
  - 1
  - 2

Dimensions

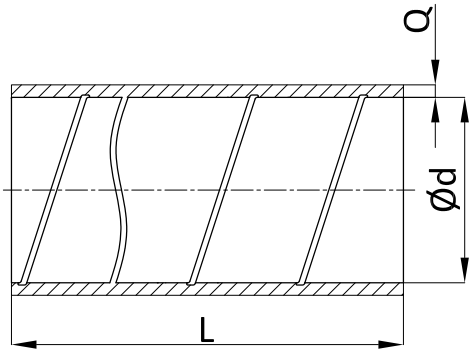

$Ød_{nom}$ [mm]	πd [m]	$\frac{\pi d^2}{4}$ [m²]
80	0.251	0.005
100	0.314	0.008
125	0.393	0.012
150	0.471	0.018
160	0.502	0.020
200	0.628	0.031
250	0.785	0.049

ALNOR® ventilation systems
is a registered trademark protected by a technical patent. All modification rights reserved.

Rubber foam insulated bends

F..-BPL



Description

Pressed ventilation bends insulated with rubber foam, applied for installations running at places where their further insulation is impossible. They are perfectly fit for the duct air-conditioning system where the use of the 9-25 mm insulation is possible.

The bends are available with standard 90- and 45- degree angles and in the short version as F..-BPKL-…-…, or in the short female end version as F..-BPKFL-…-…, which enters into the spiral duct on one side and overlaps the frame of e.g. KN-RM-ddd valve on the other side.

Marking example

Product code: **F09 - BPL - - 100 - 90**

rubber thickness Q:
- 09
- 13
- 19
- 25

type
- standard r=1D **BPL**
- short r=0.8D **BPKL**
- short female-male **BPKFL**

sheet:
- galvanised
- stainless steel K
- aluminium A

diameter

angle

Dimensions

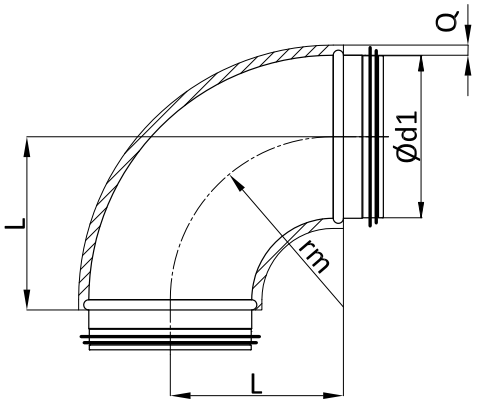

$Ød_{1\ nom}$ [mm]	F..-BPL L [mm]	F..-BPKL / F..BPKFL L [mm]
80	100	52
100	100	62
125	125	75
150	150	87
160	160	92
200	200	112
250	250	-

Technical data

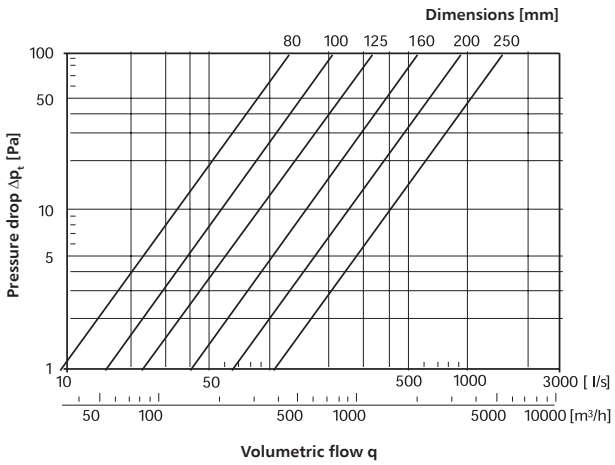

Data for F..BPL

ALNOR® ventilation systems
is a registered trademark protected by a technical patent. All modification rights reserved.

Rubber foam insulated female and male reducers

F..-RPCL



Description

The reducers in the duct ventilation and air-conditioning systems serve the purpose of increasing or decreasing the pressure in the air supply system. They are available in two versions: A - male end version (e.g. F09-RPCL-125-100) to be joined on both sides with the ventilation spiral ducts; B - female-male version (e.g. F09-RPCFL-125-100) in which the smaller diameter enters into the round duct, and the larger diameter overlaps another fitting – most frequently the T-piece.

Marking example

Product code: **F09 - RPCL - - 125 - 100**

rubber thickness Q:
- 09
- 13
- 19
- 25

type
- male-male **RPCL**
- female-male **RPCFL**

sheet:
- galvanised
- stainless steel K
- aluminium A

diameter
- d_1
- d_2

Dimensions

RPCFL

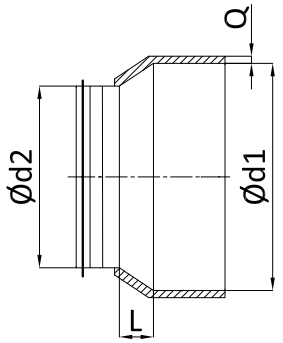

RPCL

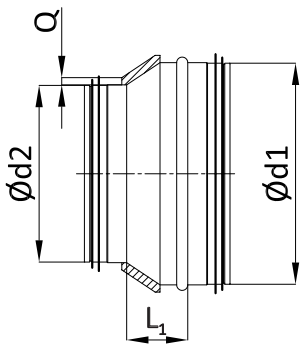

$Ød_{1\ nom}$ [mm]	$Ød_{2\ nom}$ [mm]	L [mm]	L_1 [mm]
100	80	10	18
125	80	22	28
	100	12	22
150	100	35	35
	125	30	30
160	80	15	48
	100	30	37
	125	17	26
	150	30	30
200	100	50	58
	125	37	46
	150	35	35
	160	20	26
250	125	40	70
	150	60	60
	160	45	53
	200	25	31

ALNOR® ventilation systems
is a registered trademark protected by a technical patent. All modification rights reserved.

Rubber foam insulated female and male reducers

F..-RPCL

Technical data

First reduction degree

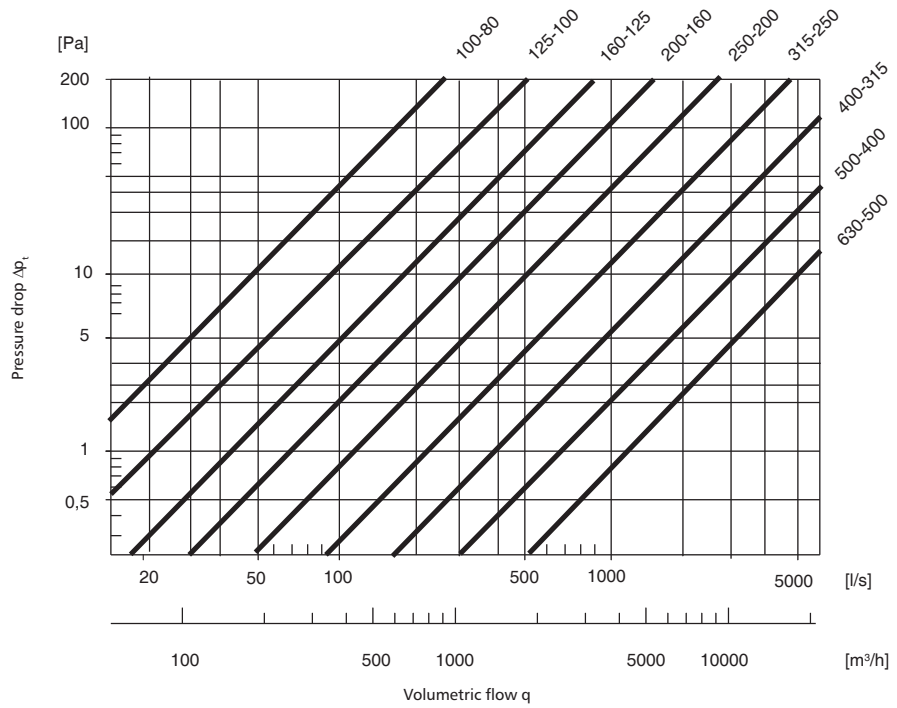

Second reduction degree

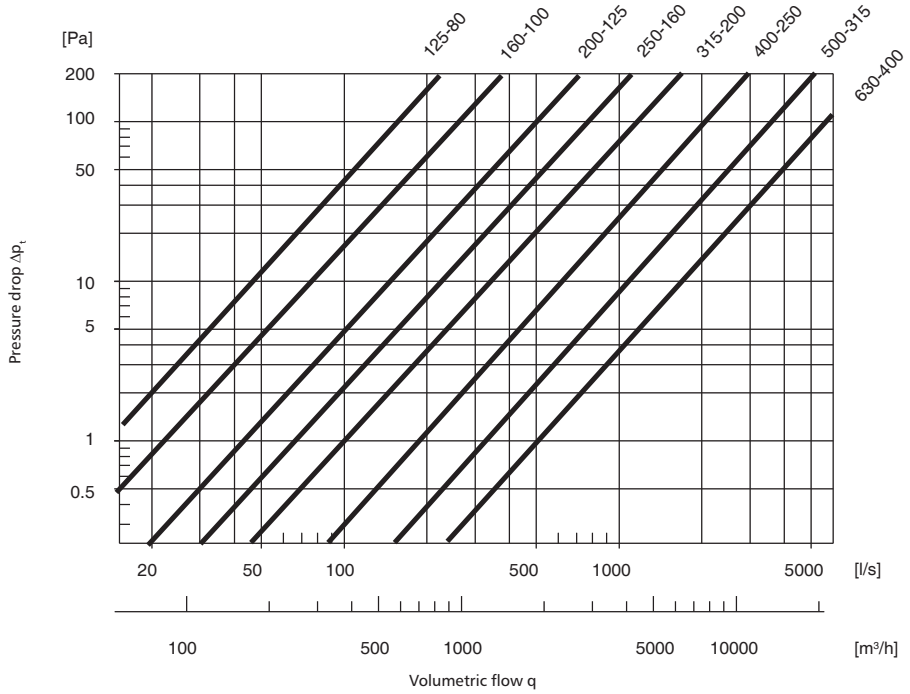

ALNOR® ventilation systems
is a registered trademark protected by a technical patent. All modification rights reserved.

Rubber foam insulated T-piece

F..-TPCL



Description

T-piece for distribution of air in the ventilation system. The most typical one has a branch-off with the same or similar diameter in relation to the pipe opening. The 90-degree angle is the most universal one - in the case that the non-standard nature of the system requires the 45-, 60-, 15-degree branch-off, it must be discussed and quoted separately.

Marking example

Product code: **F09 - TPCL - - 125 - 100**

rubber thickness Q:
- 09
- 13
- 19
- 25

type

sheet:
- galvanised
- stainless steel K
- aluminium A

diameter
- d_1
- d_3

Dimensions

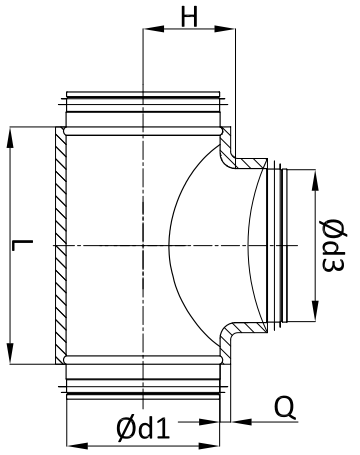

$Ød_1$ [mm]	$Ød_3$ / $Ød_4$ [mm]	L [mm]	H [mm]
80	80	140	52
100	80	126	65
	100	170	65
125	80	146	75
	100	184	78
	125	200	83
150	80	140	87
	100	175	90
	125	215	95
	150	260	95
160	80	140	92
	100	184	95
	125	229	100
	150	260	100
	160	229	105
200	80	140	112
	100	175	115
	125	215	115
	150	260	120
	160	281	125
250	80	156	137
	100	175	140
	125	220	145
	150	255	145
	160	256	150
	200	306	150
	250	307	150

ALNOR® ventilation systems
is a registered trademark protected by a technical patent. All modification rights reserved.

Rubber foam insulated male coupling with the gasket

F..-NSL



Description

The F09-NSL-ddd male coupling is used to join round spiral ducts insulated with rubber foam. The factory-fit EPDM rubber gasket ensures the highest airtightness class D for both the residential and industrial ventilation systems.
The rubber width on the coupling is applied to eliminate the missing part of the insulation on the spiral ducts, which is not complete because of the transport conditions.

Marking example

Product code: **F09 - NSL - - 100**

rubber thickness Q:
- 09
- 13
- 19
- 25

type

sheet:
- galvanised
- stainless steel K
- aluminium A

diameter

Dimensions

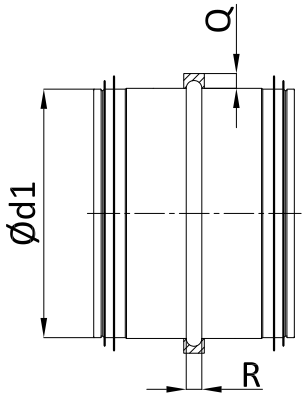

$Ød_{nom}$ [mm]	R [mm]
80	8
100	8
125	8
150	8
160	8
200	8
250	8

ALNOR® ventilation systems
is a registered trademark protected by a technical patent. All modification rights reserved.

Rubber foam female coupling

F..-MSF



Description

The female coupling joins two fittings which are of the size of the male couplings - it overlaps the fitting such as an bend, a T-piece or a reducer on both sides. It complements the system of ventilation and air conditioning ducts and fittings.

Marking example

Product code: **F09 - MSF - - 100**

rubber thickness Q:
- 09
- 13
- 19
- 25

type

sheet:
- galvanised
- stainless steel K
- aluminium A

diameter

Dimensions

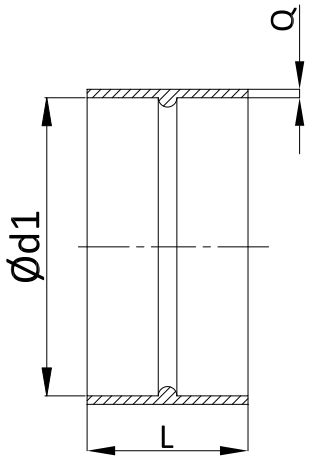

$Ød_{nom}$ [mm]	L [mm]
80	78
100	78
125	78
150	78
160	78
200	78
250	78

ALNOR® ventilation systems
is a registered trademark protected by a technical patent. All modification rights reserved.

Download Wentyle
Download AlnorCAM
Buy via B2B

Plastic round ventilation system

The manufacturer reserves the right to make changes in the dimension measurements and technical specification of products given the ongoing product development process.

ALNOR® ventilation systems
is a legally protected trademark and technical patent. All rights reserved.

About the system

Ventilation systems made of plastics are widely used in many areas and sectors where the conventional materials, such as plated steel or stainless steel become insufficient due to their limitations. Plastics have traditionally been used in laboratories, chemical industry or spaces of high purity grade.

Advantages of plastics:

- Chemical resistance.
- Resistance to corrosion.
- Low weight.
- Durability.
- High standard of air tightness, low leakage.
- Do not require frequent maintenance.
- Eco friendly.

The types and characteristics of plastics

To better distinguish the materials that in their natural form, they are generally semi-transparent, we use standardized colours:



- **PE**
- **PP**
- **PPs**
- **PVC**
- **PVCW**
- **PVDF**

PVC - polyvinyl chloride: is characterized by high chemical resistance (especially to organic acids and lye), high stability and rigidity, high resistance to corrosion, operating temperature from 0 to +60˚C, as well as self-extinguishing capacity. Plastics welding or bonding up to Ø 250. For interior use. Fittings are produced in accordance with the DIN 8062 standard by the process of injection moulding (Ø 50-400), blow moulding (Ø 450-600) or welding per segment (from Ø 700).

White PVC - used for outdoors.

PP - polypropylene: high chemical resistance (especially to solvents and alcohols), high resistance to corrosion, hot water and water vapour, operating temperature from 0 to 80˚C, normally flammable material. Plastics welding. For interior use. Fittings are produced in accordance with the DIN 8077 standard by the process of injection moulding (Ø 50-400), blow moulding (Ø 450-600) or welding per segment (from Ø 560).

PPs - polyphenylene sulfide: shares the basic characteristics of polypropylene (PP), but is also flame resistant and bears high resistance to temperature - the range of operating temperature scales from 0 to 90˚C.

PP-EL-s - homopolymer: apart from having the same characteristics as PPs, it is also an electrically conductive material. This effect is achieved by providing PPs with specifically conductive particles. Therefore the PP-EL-s installations are permitted in the explosion-proof rooms, and rooms where electronic devices are being assembled - wherever static protection is required. Opersting temperature from 0 to +80˚C.

PE - polyethylene: high chemical resistance, high resistance to hot water and water vapour, UV resistant, operating temperature from -50 to 70˚C, normally flammable material. Plastics welding. Used for interiors and outdoors. Fittings are produced in accordance with the DIN 8074 standard by the process of injection moulding (Ø 50-400), blow moulding (Ø 450-600) or welding per segment (from Ø 560).

PVDF - polyvinylidene fluoride: high chemical resistance (halogens and oxidizing agents), operating temperature from -30 to +120˚C, UV resistant, corrosion resistant, flame resistant. Plastics welding (alternatively bonding with a specific adhesive process). For interior and outdoors use. Fittings are produced in accordance with the DIN EN ISO 10931 standard by the process of injection moulding (Ø 50-400).

ALNOR® ventilation systems
is a legally protected trademark and technical patent. All rights reserved.

Properties of polymers

Full name of material	*Properties*				
	Density [g/cm³]	*Combustibility*	*Chemical resistance*	*Operating temperature*	*Insulator*
Polivinyl chloride	1,42	Not easily flammable	Organic acides, spent alkalies	0 to +60	Yes
Polypropylene	0,95	Flammable	Solvents alcohols	0 to +80	Yes
Polyphenylyne sulfide	0,95	Not easily flammable	Solvents alcohols	0 to +90	Yes
Homopolymer Polypropylene	1,23	Not easily flammable	Solvents alcohols	0 to +80	No
Polyvinylidene fluoride	1,78	Not easily flammable	Fluoride, Oxidising agents	-30 to +120	Yes
Polyethylene	0,95	flammable	Solvents alcohols	-50 to +70	Yes

Connection methods

Gas metal arc welding - welding using a welding wire that is heated by hot air together with the material being welded - a standard a method used on construction sites during installations.

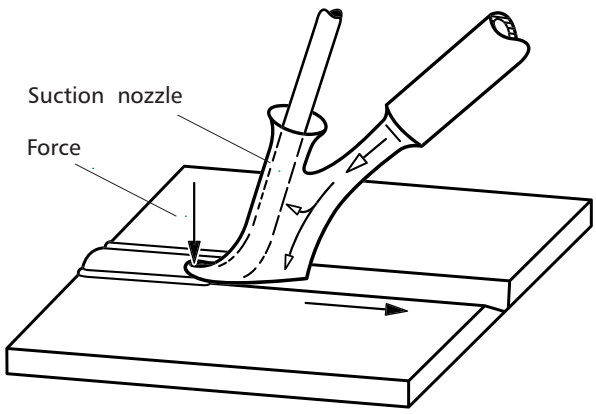

Take-off welding - take-off butt welding with a pressurized heater until completely cool/ welding

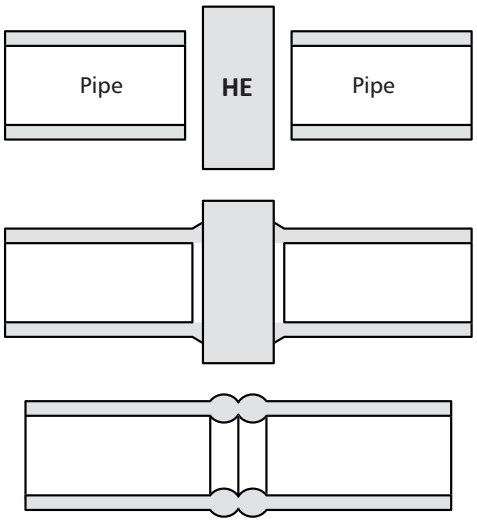

ALNOR® ventilation systems
is a legally protected trademark and technical patent. All rights reserved.

About the system

Butt welding - connecting heated take-offs with the socket-nipple element

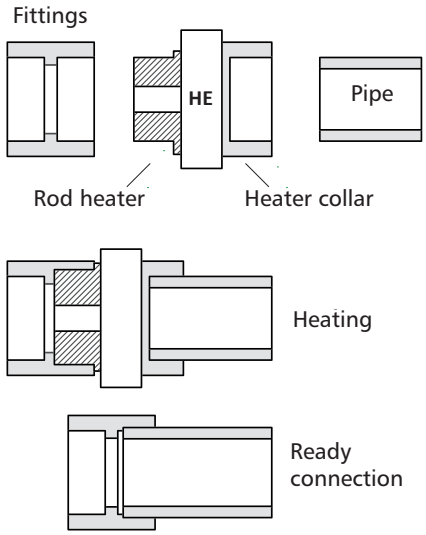

Extrusive gas welding - extrusion of plasticized material, an efficient and advanced welding of thick-walled materials

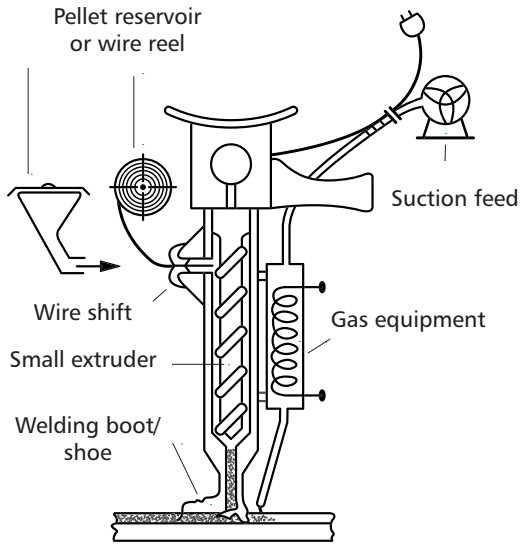

Bonding - using special adhesives, bonding is recommended only for PVC components up to Ø 250mm.

Check if you can buy or rent specialized tools from ALNOR!

Tolerances

The catalogue includes pipes and flare fittings, flanged joints are available upon request.

Tolerances for PVC/white PVC.

Ducts		*Fittings*	
diameter $Ød_{nom}$ *[mm]*	*deviation* $^{+/-}$ *[mm]*	diameter $Ød_{nom}$ *[mm]*	*deviation* $^{+/-}$ *[mm]*
50	0.2	50-125	0.3
63-90	0.3	140 - 200	0.4
110-125	0.4	225 - 250	0.5
140-160	0.5	280 - 315	0.6
180-200	0.6	355 – 400	0.7
225	0.7	450	0.8
250	0.8	500	0.9
280	0.9	600	1.0
315	1.0	700	2.5
355	1.1	800 - 900	3.0
400	1.2	1000 - 1250	4.0
450	1.4		
500	1.5		

Tolerances for PP / PPs / PP-EL-s / PE / PVDF.

Fittings	
diameter $Ød_{nom}$ *[mm]*	*deviation* $^{+/-}$ *[mm]*
50 - 75	0.7
90	0.9
110	1.0
125	1.2
140	1.3
160	1.5
180	1.7
200	1.8
225	1.9
250	2.0
280	2.2
315	2.4
355	2.7
400	3.0
450	3.5
500	4.0
560 - 900	4.5
1000 - 1250	5.0

ALNOR® ventilation systems
is a legally protected trademark and technical patent. All rights reserved.

Plastic circular ventilation pipes

PVC-SRGL

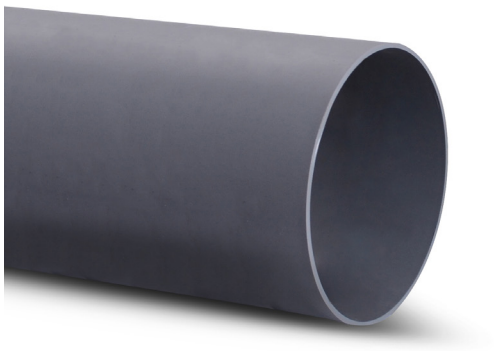

Description

Round plastic ventilation pipes are joined by welding (or PVC gluing up to ø250). Manufactured in accordance with DIN 8062 standards for ventilation pipes. PVC pipes of larger diameter than 500mm are made of sheets. Pipes made of PP, PPs, PE and PPELs are extruded. Other wall thicknesses are available on request.

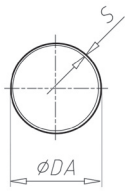

NOTE!
The diameter given in the catalogue is the pipe outside diameter.

Available materials - designation example

PVC-SRGL-... - PVC polyvinyl chloride
PP-SRGL-... - Polypropylene
PPs-SRGL-... - PPs flame resistant polypropylene
PE-SRGL-... - Polyethylene

Available materials - upon special order

PVCW-SRGL-... - Polyvinyl chloride white
PPELs-SRGL-... - Polypropylene EL flame resistant and with electrical conductivity
PVDF-SRGL-... - Polyvinylidene fluoride

Designation example:

Product Code: **PVC - SRGL - aaa**

material
type
ØDA

Dimensions

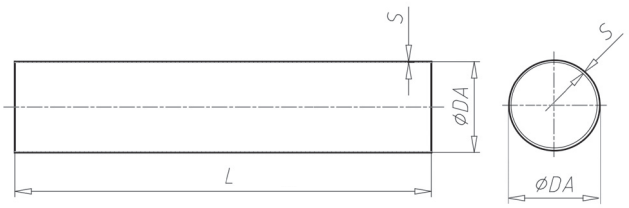

Standard pipe lengths: 1 / 2 / 3 / 5m

ØDA [mm]	S [mm]							L [m]
	PVC	PVCW	PP	PPs	PE	PE-EL-s	PVDF	
75	1.9	1.8	2.3	1.9		-	-	5
90	1.8	1.8	2.8	2.2		2.8	-	5
110	1.8	1.8	2.7	2.7	2.7	3.0	3.4	5
125	1.8	1.8	3.1	3.1	3.1	-	3.9	5
140	1.8	-	3.5	3.0	3.5	-	4.3	5
160	1.8	1.8	4.0	3.0	4.0	3.0	4.9	5
180	1.8	-	4.4	3.0	4.4	3.0	5.5	5
200	1.8	1.8	3.0	3.0	4.9	3.0	6.2	5
225	1.8	-	5.5	3.5	5.5	3.5	6.9	5
250	2.0	2.0	3.5	3.5	6.2	3.5	7.7	5
280	2.2	-	6.9	4.0	6.9	-	8.6	5
315	2.5	2.9	5.0	5.0	7.7	5.0	9.7	5
355	2.9*	2.9*	6.0	5.0	8.7	-	10.9	5
400	3.2	3.2	6.0	6.0	8.0	6.0	12.3	5
450	3.6	-	6.0	6.0	8.0	-	-	5
500	4.0	5.0**	8.0	8.0	8.0	-	-	5 / 3**
560	6.0**	-	8.0	8.0	10.0	-	-	5 / 3**
600	6.0**	-	6.0**	6.00**	6.00**	-	-	3**
630	6.0**	-	10.0	10.0	10.0	-	-	5 / 3**
700	6.0**	6.0**	6.00**	6.00**	6.00**	-	-	3**
710	6.0**	-	12.0	12.0	12.0	-	-	5 / 3**
800	8.0**	8.0**	12.0	12.0	12.0	-	-	5 / 3**
900	8.0**	8.0**	15.0	15.0	15.0	-	-	5 / 3**
1000	10.0**	10.0**	15.0	15.0	15.0	-	-	5 / 3**
1200	12.0**	12.0**	18.0	18.0	18.0	-	-	5 / 3**
1250	12.0**	12.0**	12.0**	12.0**	12.0**	-	-	3**
1400	12.0**	-	20.0	12.0**	20.0	-	-	5 / 3**

*difference to the standard that indicates: s=2.8mm for size DN355
**pipes made of sheets

Legend:
- SPR41
- SPR51
- SPR127
- SDR33
- Ventilation standard

SDR (Standard dimension ratio) describes the correlation between the pipe outside diameter and the pipe wall thickness. The higher SDR is, the smaller the wall thickness is. SDR 127 is a special series for ventilation pipelines.

ALNOR® ventilation systems
is a legally protected trademark and technical patent. All rights reserved.

Plastic ventilation bend

PVC-BPF / PVC-BSF



Description

Plastic ventilation bend with socket formed part round with interior stop for connecting pipes by welding (or PVC bonding up to Ø 250). Manufactured by the process of injection moulding (Ø 50-400), blow moulding (Ø 450-600) or welding per segment (PVC from Ø 700, PP / PPs / PP-EL-s / PE / PVDF from Ø 560). Segment bends are available under the PVC-BSF code.

Available materials - designation example

PVC-BPF-... - PVC polyvinyl chloride
PPs-BPF-... - PPs flame resistant polypropylene

Available materials - upon special order

PVCW-BPF-... - white PVC polyvinyl chloride
PP-BPF-... - PP polypropylene
PPELs-BPF-... - PP-EL-s flame resistant electrically conductive polypropylene
PE-BPF-... - PE polyethylene
PVDF-BPF-... - PVDF plastic

Available angles: 90°, 60°, 45°, 30°, 15°

Designation example:

Product Code: **PVC - BPF - aaa - bbb**

material
type
ØDA
angle

Dimensions

PVC-BPF-90

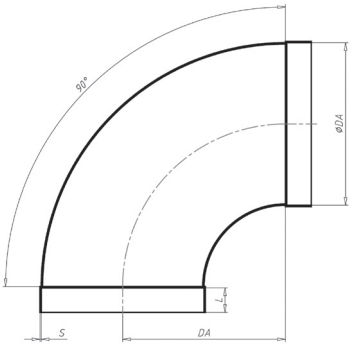

PVC-BSF-90

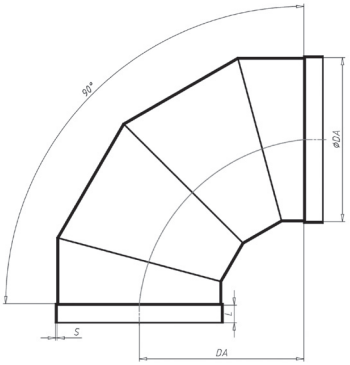

PVC-BPF-45

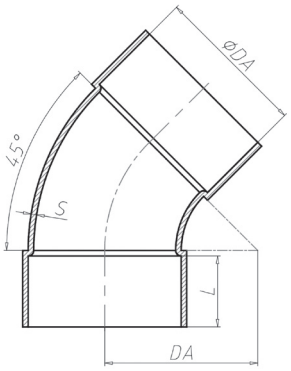

PVC-BSF-45

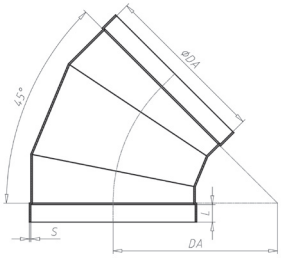

ALNOR® ventilation systems
is a legally protected trademark and technical patent. All rights reserved.

Plastic ventilation bend

PVC-BPF / PVC-BSF

Dimensions

	PVC / PVCW			PE / PP / PPs / PP-EL-s / PVDF		
Ø [mm]	L [mm]	Tolerance [mm]	Min. S [mm]	L [mm]	Tolerance [mm]	Min. S [mm]
50	25	0.3	1.8	25	0.7	3.0
63	25	0.3	1.8	25	0.7	3.0
75	40	0.3	1.8	40	0.7	3.0
90	40	0.3	1.8	40	0.9	3.0
110	40	0.3	1.8	40	1.0	3.0
125	40	0.3	1.8	40	1.2	3.0
140	40	0.4	1.8	40	1.3	3.0
160	40	0.4	1.8	40	1.5	3.0
180	40	0.4	1.8	40	1.7	3.0
200	40	0.4	1.8	40	1.8	3.0
225	40	0.5	1.8	40	1.9	3.5
250	40	0.5	2.0	40	2.0	3.5
280	50	0.6	2.3	50	2.2	3.5
315	50	0.6	2.5	50	2.4	4.0
355	50	0.7	2.9	50	2.7	4.0
400	50	0.7	3.2	50	3.0	4.5
450	50	0.8	3.6	50	3.5	5.0
500	50	0.9	4.0	50	4.0	5.0
560	-	-	-	60	4.5	5.0
600	60	1.0	6.0	60	4.5	6.0
630	-	-	-	70	4.5	6.0
700	70	2.5	6.0	70	4.5	6.0
710	-	-	-	80	4.5	6.0
800	80	3.0	8.0	80	4.5	8.0

ALNOR® ventilation systems
is a legally protected trademark and technical patent. All rights reserved.

Plastic concentric ventilation reducer

PVC-RPCF

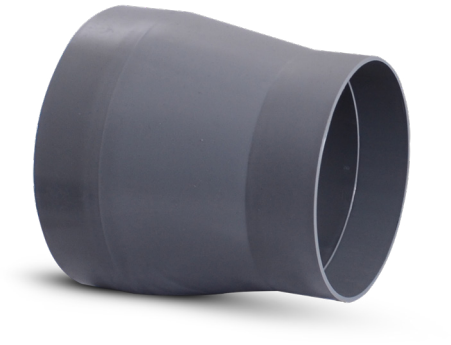

Description

Plastic concentric ventilation reducer with socket formed part round with interior stop for connecting pipes by welding (or PVC bonding up to Ø 250). Manufactured by injection moulding or with prefabricates.

Available materials - designation example

PVC-RPCF-... - PVC polyvinyl chloride
PPs-RPCF-... - PPs flame resistant polypropylene

Available materials - upon special order

PVCW-RPCF-... - white PVC polyvinyl chloride
PP-RPCFF-... - PP polypropylene
PPELs-RPCF-... - PP-EL-s flame resistant electrically conductive polypropylene
PE-RPCF-... - PE polyethylene
PVDF-RPCF-... - PVDF plastic

Designation example:

Product Code: **PVC - RPCF - aaa - bbb**

material
type
$ØDA_1$
$ØDA_2$

Dimensions

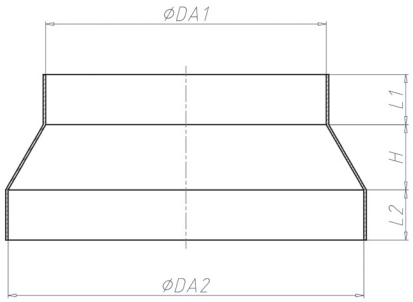

PVC / PVCW					
$Ø_1$ [mm]	$Ø_2$ [mm]	H [mm]	L_1 [mm]	L_2 [mm]	Min. S [mm]
50	75	40	25	40	2.5
50	90	60	25	40	2.5
50	110	100	25	40	2.5
63	75	40	25	40	2.5
63	90	60	25	40	2.5
63	110	100	25	40	2.5
75	90	40	40	40	2.5
75	110	80	40	40	2.5
75	125	120	40	40	2.5
90	110	60	40	40	2.5
90	125	100	40	40	2.5
110	125	40	40	40	2.5
110	140	80	40	40	2.5
110	160	140	40	40	2.5
110	180	50	40	40	2.5
110	200	65	40	40	2.5
125	140	40	40	40	2.5
125	160	100	40	40	2.5
125	180	40	40	40	2.5
125	200	55	40	40	2.5
125	225	65	40	40	2.5
125	250	90	40	40	2.5
140	160	60	40	40	2.5
140	180	30	40	40	2.5
140	200	45	40	40	2.5
140	225	60	40	40	2.5
140	250	80	40	40	2.5

ALNOR® ventilation systems
is a legally protected trademark and technical patent. All rights reserved.

Plastic concentric ventilation reducer

PVC-RPCF

Dimensions

PVC / PVCW					
$Ø_1$ [mm]	$Ø_2$ [mm]	H [mm]	L_1 [mm]	L_2 [mm]	Min. S [mm]
160	180	60	40	40	2.5
160	200	120	40	40	2.5
160	225	100	40	40	2.5
160	250	120	40	40	2.5
160	280	85	40	50	2.5
160	315	115	40	50	2.5
180	200	75	40	40	2.5
180	225	85	40	40	2.5
180	250	100	40	40	2.5
180	280	65	40	50	2.5
180	315	100	40	50	2.5
200	355	80	40	40	2.5
200	250	140	40	40	2.5
200	280	105	40	50	2.5
200	315	160	40	50	2.5
200	355	115	40	50	2.5
225	250	80	40	40	2.5
225	280	40	40	50	2.5
225	315	65	40	50	2.5
225	355	95	40	50	2.5
225	400	125	40	50	2.5
250	280	35	40	50	2.5
250	315	100	40	50	2.5
250	355	140	40	50	2.5
250	400	105	40	50	2.5
250	450	145	40	50	2.5
280	315	100	50	50	2.5
280	355	65	50	50	2.5
280	400	90	50	50	2.5
280	450	120	50	50	2.5
280	500	160	50	50	2.5
315	355	20	50	50	2.5
315	400	120	50	50	2.5
315	450	95	50	50	2.5
315	500	135	50	50	2.5
355	400	135	50	50	3.0
355	450	75	50	50	3.0
355	500	110	50	50	3.0
355	560	180	50	60	3.0
355	600	215	50	60	3.0
355	630	240	50	60	3.0
355	700	300	50	70	3.0
355	710	310	50	70	3.0
355	800	385	50	80	3.0

PVC / PVCW					
$Ø_1$ [mm]	$Ø_2$ [mm]	H [mm]	L_1 [mm]	L_2 [mm]	Min. S [mm]
400	450	45	50	50	3.0
400	500	80	50	50	3.0
400	560	140	50	60	3.0
400	600	175	50	60	3.0
400	630	205	50	60	3.0
400	700	265	50	70	3.0
400	710	270	50	70	3.0
400	800	350	50	80	3.0
450	500	45	50	50	5.0
450	560	100	50	60	5.0
450	600	130	50	60	5.0
450	630	160	50	60	5.0
450	700	220	50	70	5.0
450	710	230	50	70	5.0
450	800	305	50	80	5.0
500	560	55	50	60	5.0
500	600	90	50	60	5.0
500	630	115	50	60	5.0
500	700	175	50	70	5.0
500	710	185	50	70	5.0
500	800	265	50	80	5.0
560	600	40	60	70	6.0
560	630	65	60	60	6.0
560	700	125	60	70	6.0
560	710	135	60	70	6.0
560	800	215	60	80	6.0
600	630	30	60	60	6.0
600	700	90	60	70	6.0
600	710	100	60	70	6.0
600	800	180	60	80	6.0
630	700	65	60	70	6.0
630	710	75	60	70	6.0
630	800	155	60	80	6.0
700	710	15	70	70	6.0
700	800	90	70	80	6.0
710	800	85	70	80	8.0

ALNOR® ventilation systems
is a legally protected trademark and technical patent. All rights reserved.

Plastic concentric ventilation reducer

PVC-RPCF

Dimensions

PE / PP / PPs / PP-EL-s / PVDF					
$Ø_1$ [mm]	$Ø_2$ [mm]	H [mm]	L_1 [mm]	L_2 [mm]	Min. S [mm]
50	75	40	25	40	2.5
50	90	60	25	40	2.5
50	110	100	25	40	2.5
63	75	40	25	40	2.5
63	90	60	25	40	2.5
63	110	100	25	40	2.5
75	90	40	40	40	2.5
75	110	80	40	40	2.5
75	125	120	40	40	2.5
90	110	60	40	40	2.5
90	125	100	40	40	2.5
110	125	40	40	40	2.5
110	140	80	40	40	2.5
110	160	140	40	40	2.5
110	180	50	40	40	2.5
110	200	65	40	40	2.5
125	140	40	40	40	2.5
125	160	100	40	40	2.5
125	180	40	40	40	2.5
125	200	55	40	40	2.5
125	225	65	40	40	2.5
125	250	90	40	40	2.5
140	160	60	40	40	2.5
140	180	30	40	40	2.5
140	200	45	40	40	2.5
140	225	60	40	40	2.5
140	250	80	40	40	2.5
160	180	60	40	40	2.5
160	200	120	40	40	2.5
160	225	100	40	40	2.5
160	250	120	40	40	2.5
160	280	85	40	50	2.5
160	315	115	40	50	2.5
180	200	75	40	40	2.5
180	225	85	40	40	2.5
180	250	100	40	40	2.5
180	280	65	40	50	2.5
180	315	100	40	50	2.5
200	355	80	40	40	2.5
200	250	140	40	40	2.5
200	280	105	40	50	2.5
200	315	160	40	50	2.5
200	355	115	40	50	2.5

PE / PP / PPs / PP-EL-s / PVDF					
$Ø_1$ [mm]	$Ø_2$ [mm]	H [mm]	L_1 [mm]	L_2 [mm]	Min. S [mm]
250	280	35	40	50	2.5
250	315	100	40	50	2.5
250	355	140	40	50	2.5
250	400	105	40	50	2.5
250	450	145	40	50	2.5
280	315	100	50	50	2.5
280	355	65	50	50	2.5
280	400	90	50	50	2.5
280	450	120	50	50	2.5
280	500	160	50	50	2.5
315	355	20	50	50	2.5
315	400	120	50	50	2.5
315	450	95	50	50	2.5
315	500	135	50	50	2.5
355	400	135	50	50	3.0
355	450	75	50	50	3.0
355	500	110	50	50	3.0
355	560	180	50	60	3.0
355	600	215	50	60	3.0
355	630	240	50	60	3.0
355	700	300	50	70	3.0
355	710	310	50	70	3.0
355	800	385	50	80	3.0
400	450	45	50	50	3.0
400	500	80	50	50	3.0
400	560	140	50	60	3.0
400	600	175	50	60	3.0
400	630	205	50	60	3.0
400	700	265	50	70	3.0
400	710	270	50	70	3.0
400	800	350	50	80	3.0
450	500	45	50	50	5.0
450	560	100	50	60	5.0
450	600	130	50	60	5.0
450	630	160	50	60	5.0
450	700	220	50	70	5.0
450	710	230	50	70	5.0
450	800	305	50	80	5.0

ALNOR® ventilation systems
is a legally protected trademark and technical patent. All rights reserved.

Plastic concentric ventilation reducer

PVC-RPCF

Dimensions

PE / PP / PPs / PP-EL-s / PVDF					
$Ø_1$ [mm]	$Ø_2$ [mm]	H [mm]	L_1 [mm]	L_2 [mm]	Min. S [mm]
500	560	55	50	60	5.0
500	600	90	50	60	5.0
500	630	115	50	60	5.0
500	700	175	50	70	5.0
500	710	185	50	70	5.0
500	800	265	50	80	5.0
560	600	40	60	70	6.0
560	630	65	60	60	6.0
560	700	125	60	70	6.0
560	710	135	60	70	6.0
560	800	215	60	80	6.0
600	630	30	60	60	6.0
600	700	90	60	70	6.0
600	710	100	60	70	6.0
600	800	180	60	80	6.0
630	700	65	60	70	6.0
630	710	75	60	70	6.0
630	800	155	60	80	6.0
700	710	15	70	70	6.0
700	800	90	70	80	6.0
710	800	85	70	80	8.0

ALNOR® ventilation systems
is a legally protected trademark and technical patent. All rights reserved.

Plastic branch outlet 90°

PVC-TPCF-90



Description

Plastic branch outlet with socket formed part round with interior stop for connecting pipes by welding (or PVC bonding up to Ø 250). Manufactured by the process of injection moulding (Ø 50-315) or prefabricated (from Ø 355, PVDF from Ø 450).

Available materials - designation example

PVC-TPCF-... - PVC polyvinyl chloride
PPs-TPCF-... - PPs flame resistant polypropylene

Available materials - upon special order

PVCW-TPCF-... - white PVC polyvinyl chloride
PP-TPCF-... - PP polypropylene
PPELs-TPCF-... - PP-EL-s flame resistant electrically conductive polypropylene
PE-TPCF-... - PE polyethylene
PVDF-TPCF-... - PVDF plastic

Designation example:

Product Code: **PVC - TPCF - aaa - 90**

material
type
ØDA
angle

Dimensions

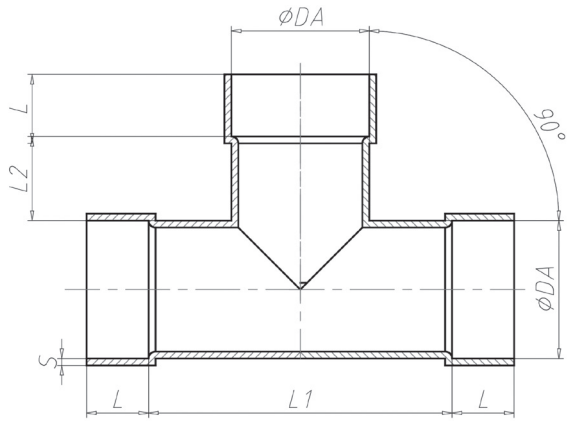

PVC / PVCW					
Ø [mm]	L [mm]	L_1 [mm]	L_2 [mm]	Tolerance [mm]	S [mm]
50	25	105	28	0.3	2.5
63	25	105	22	0.3	2.5
75	40	105	15	0.3	2.5
90	40	120	15	0.3	2.5
110	40	140	15	0.3	2.5
125	40	155	15	0.3	2.5
140	40	170	15	0.4	2.5
160	40	190	15	0.4	2.5
180	40	210	15	0.4	2.5
200	40	230	15	0.4	2.5
225	40	270	15	0.5	2.5
250	40	280	12	0.5	2.5
280	50	320	20	0.6	2.5
315	50	345	8	0.6	4.0
355	45	405	55	0.7	3.0
400	45	460	60	0.7	3.0
450	50	586	70	0.8	3.6
500	50	650	75	0.9	5.0
560	-	-	-	-	-
600	60	780	90	1.0	5.0
630	-	-	-	-	-
700	70	910	105	2.5	6.0
710	-	-	-	-	-
800	80	1040	120	3.0	8.0

ALNOR® ventilation systems
is a legally protected trademark and technical patent. All rights reserved.

Plastic branch outlet 90°

PVC-TPCF-90

Dimensions

PE / PP / PPs / PP-EL-s / PVDF					
Ø [mm]	L [mm]	L_1 [mm]	L_2 [mm]	Tolerance [mm]	S [mm]
50	25	105	28	0.7	3.0
63	25	105	22	0.7	3.0
75	40	105	15	0.7	3.0
90	40	120	15	0.9	3.0
110	40	140	15	1.0	3.0
125	40	155	15	1.2	3.0
140	40	170	15	1.3	3.0
160	40	190	15	1.5	3.0
180	40	210	15	1.7	3.0
200	40	230	15	1.8	4.0
225	40	270	15	1.9	4.0
250	40	280	12	2.0	4.0
280	50	320	20	2.2	4.0
315	50	345	8	2.4	5.0
355	50	405	55	2.7	5.0
400	50	460	60	3.0	6.0
450	50	586	70	3.5	5.0
500	50	650	75	4.0	5.0
560	60	728	85	4.5	6.0
600	60	780	90	4.5	6.0
630	70	820	100	4.5	6.0
700	70	910	105	4.5	6.0
710	80	924	110	4.5	6.0
800	80	1040	120	4.5	8.0

ALNOR® ventilation systems
is a legally protected trademark and technical patent. All rights reserved.

Plastic branch outlet 45°

PVC-TPVF-45



Description

Plastic branch outlet with socket formed part round with interior stop for connecting pipes by welding (or PVC bonding up to Ø 250). Manufactured by the process of injection moulding (Ø 50-315) or prefabricated (from Ø 355, PVDF from Ø 450).

Available materials - designation example

PVC-TPVF-... - PVC polyvinyl chloride
PPs-TPVF-... - PPs flame resistant polypropylene

Available materials - upon special order

PVCW-TPVF-... - white PVC polyvinyl chloride
PP-TPVF-... - PP polypropylene
PPELs-TPVF-... - PP-EL-s flame resistant electrically conductive polypropylene
PE-TPVF-... - PE polyethylene
PVDF-TPVF-... - PVDF plastic

Designation example:

Product Code: **PVC - TPVF - aaa - 45**

material
type
ØDA
angle

Dimensions

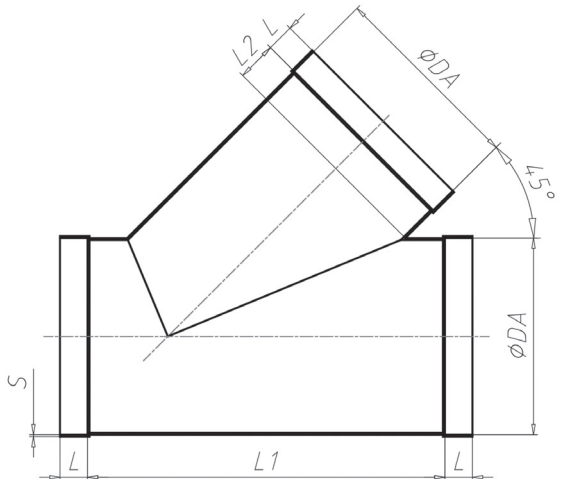

PVC / PVCW					
Ø [mm]	L [mm]	L_1 [mm]	L_2 [mm]	Tolerance [mm]	S [mm]
50	35	92	25	0.3	2.5
63	35	115	25	0.3	2.5
75	35	156	25	0.3	2.5
90	35	178	25	0.3	2.5
110	35	206	25	0.3	2.5
125	35	228	25	0.3	2.5
140	35	254	28	0.4	2.5
160	35	292	32	0.4	2.5
180	35	328	36	0.4	2.5
200	35	364	40	0.4	2.5
225	35	410	45	0.5	2.5
250	35	545	50	0.5	2.5
280	40	508	56	0.6	2.5
315	40	574	63	0.6	4.0
355	40	646	71	0.7	3.0
400	40	726	80	0.7	3.0
450	50	818	90	0.8	3.6
500	50	908	100	0.9	5.0
560	-	-	-	-	-
600	60	1090	120	1.0	5.0
630	-	-	-	-	-
700	70	1270	140	2.5	6.0
710	-	-	-	-	-
800	80	1452	160	3.0	8.0

ALNOR® ventilation systems
is a legally protected trademark and technical patent. All rights reserved.

Plastic branch outlet 45°

PVC-TPVF-45

Dimensions

PE / PP / PPs / PP-EL-s / PVDF					
Ø [mm]	L [mm]	L_1 [mm]	L_2 [mm]	Tolerance [mm]	S [mm]
50	35	92	25	0.7	3.0
63	35	115	25	0.7	3.0
75	40	156	25	0.7	3.0
90	40	178	25	0.9	3.0
110	40	206	25	1.0	3.0
125	40	228	25	1.2	3.0
140	40	254	28	1.3	3.0
160	40	292	32	1.5	3.0
180	40	328	36	1.7	3.0
200	40	364	40	1.8	4.0
225	40	410	45	1.9	4.0
250	40	454	50	20.	4.0
280	50	508	56	2.2	4.0
315	50	574	63	2.4	5.0
355	50	646	71	2.7	5.0
400	50	726	80	3.0	6.0
450	50	818	90	3.5	5.0
500	50	908	100	4.0	5.0
560	60	1016	112	4.5	6.0
600	60	1090	120	4.5	6.0
630	70	1144	126	4.5	6.0
700	70	1270	140	4.5	6.0
710	80	1290	142	4.5	6.0
800	80	1452	160	4.5	8.0

ALNOR® ventilation systems
is a legally protected trademark and technical patent. All rights reserved.

Plastic Y-piece with 45° branch-off

PVC-YSVF



Dimensions

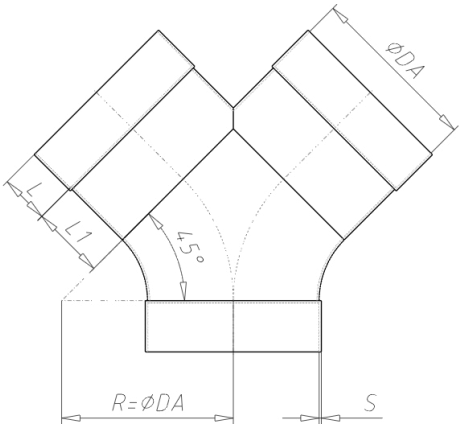

Description

The Y-piece made of plastic allows even air distribution in ventilation systems. Y-piece has 45 ° branch-offs with female connectors. Manufactured by the process of injection moulding and pre-fabricated.

Available materials - designation example

PVC-YSVF-… - PVC polyvinyl chloride
PP-YSVF-… - PP polypropylene
PPs-YSVF-… - PPs flame resistant polypropylene
PE-YSVF-… - PE polyethylene

Available materials - upon special order

PVCW-YSVF-… - white PVC polyvinyl chloride
PPELs-YSVF-… - PP-EL-s flame resistant electrically
PVDF-YSVF-… - PVDF plastic

Designation example:

Product Code: **PVC - YSVF - aaa - bbb**

material
type
ØDA
ØDA

PVC / PVCW				
Ø [mm]	L [mm]	L_1 [mm]	Tolerance [mm]	S [mm]
75	40	40	0,3	1,8
90	40	40	0,3	1,8
110	40	60	0,3	1,8
125	40	60	0,3	1,8
140	40	60	0,4	1,8
160	40	60	0,4	1,8
180	40	60	0,4	1,8
200	40	80	0,4	1,8
225	40	80	0,5	1,8
250	40	80	0,5	2,0
280	50	80	0,6	2,3
315	50	100	0,6	2,5
355	50	100	0,7	2,9
400	50	100	0,7	3,2
450	50	150	0,8	3,6
500	50	150	0,9	5,0
560	-	-	-	-
600	60	200	1,0	5,0
630	-	-	-	-
700	70	250	2,5	6,0
710	-	-	-	-
800	80	300	3,0	8,0
900	90	300	3,0	8,0
1000	100	350	4,0	10,0
1200	120	350	4,0	12,0
1250	130	350	4,0	12,0

ALNOR® ventilation systems
is a legally protected trademark and technical patent. All rights reserved.

Y-piece with 45° branch-off

PVC-YSVF

Dimensions

PE / PP / PPs / PP-EL-s / PVDF				
Ø [mm]	L [mm]	L_1 [mm]	Tolerance [mm]	S [mm]
75	40	40	0.7	3.0
90	40	40	0.9	3.0
110	40	60	1.0	3.0
125	40	60	1.2	3.0
140	40	60	1.3	3.0
160	40	60	1.5	3.0
180	40	60	1.7	3.0
200	40	80	1.8	3.0
225	40	80	1.9	3.5
250	40	80	2.0	3.5
280	50	80	2.2	3.5
315	50	100	2.4	4.0
355	50	100	2.7	4.0
400	50	100	3.0	4.5
450	50	150	3.5	5.0
500	50	150	4.0	5.0
560	60	200	4.5	6.0
600	60	200	4.5	6.0
630	70	200	4.5	6.0
700	70	250	4.5	6.0
710	80	250	4.5	6.0
800	80	300	4.5	8.0
900	90	300	4.5	8.0
1000	100	350	5.0	10.0
1200	120	350	5.0	12.0
1250	130	350	5.0	12.0

ALNOR® ventilation systems
is a legally protected trademark and technical patent. All rights reserved.

Plastic ventilation double socket

PVC-MSF



Description

Plastic double ventilation socket formed part round with interior stop for connecting pipes by welding (or PVC bonding up to Ø 250). Manufactured by the process of injection moulding (Ø 50-400) or prefabricated (from Ø 450).

Available materials - designation example

PVC-MSF-... - PVC polyvinyl chloride
PPs-MSF-... - PPs flame resistant polypropylene

Available materials - upon special order

PVCW-MSF-... - white PVC polyvinyl chloride
PP-MSF-... - PP polypropylene
PPELs-MSF-... - PP-EL-s flame resistant electrically conductive polypropylene
PE-MSF-... - PE polyethylene
PVDF-MSF-... - PVDF plastic

Designation example:

Product Code: **PVC - MSF - aaa**

material
type
ØDA

Dimensions

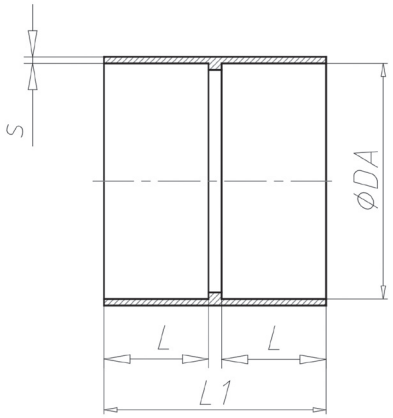

PVC / PVCW				
Ø [mm]	L [mm]	L_1 [mm]	Tolerance [mm]	S [mm]
50	45	45*	0.3	2.5
63	45	45*	0.3	2.5
75	40	85	0.3	2.5
90	40	85	0.3	2.5
110	40	85	0.3	2.5
125	40	85	0.3	2.5
140	40	85	0.4	2.5
160	40	85	0.4	2.5
180	40	85	0.4	2.5
200	40	85	0.4	2.5
225	40	85	0.5	2.5
250	40	85	0.5	2.5
280	50	105	0.6	2.5
315	50	105	0.6	2.5
355	50	105	0.7	3.0
400	50	105	0.7	3.0
450	55	120	0.8	5.0
500	55	120	0.9	5.0
560	-	-	-	-
600	55	120	1.0	6.0
630	-	-	-	-
700	70	150	2.5	6.0
710	-	-	-	-
800	80	170	3.0	8.0

* Product with no inner stop.

ALNOR® ventilation systems
is a legally protected trademark and technical patent. All rights reserved.

PVC-MSF

Dimensions

PE / PP / PPs / PP-EL-s / PVDF				
Ø [mm]	L [mm]	L_1 [mm]	Tolerance [mm]	S [mm]
50	45	45*	0.7	3.0
63	45	45*	0.7	3.0
75	40	85	0.7	3.0
90	40	85	0.9	3.0
110	40	85	1.0	3.0
125	40	85	1.2	3.0
140	40	85	1.3	3.0
160	40	85	1.5	3.0
180	40	85	1.7	3.0
200	40	85	1.8	3.0
225	40	85	1.9	3.5
250	40	85	2.0	3.5
280	50	105	2.2	3.5
315	50	105	2.4	4.0
355	50	105	2.7	4.0
400	50	105	3.0	4.5
450	55	120	3.5	5.0
500	55	120	4.0	5.0
560	55	120	4.5	6.0
600	55	120	4.5	6.0
630	55	120	4.5	6.0
700	70	150	4.5	6.0
710	80	170	4.5	6.0
800	80	170	4.5	8.0

ALNOR® ventilation systems
is a legally protected trademark and technical patent. All rights reserved.

Plastic angle take-off with mesh

PVC-ASVF-30



Description

Plastic angle take-off with mesh 30°, for connecting pipes by welding (or PVC bonding up to Ø 250). Manufactured by the process of injection moulding (Ø 50-315) or prefabricated (from Ø 355).

Available materials - designation example

PVC-ASVF-30-... - PVC polyvinyl chloride
PPs-ASVF-30-... - PPs flame resistant polypropylene

Available materials - upon special order

PVCW-ASVF-30-... - white PVC polyvinyl chloride
PP-ASVF-30-... - PP polypropylene
PPELs-ASVF-30-... - PP-EL-s flame resistant electrically conductive polypropylene
PE-ASVF-30-... - PE polyethylene
PVDF-ASVF-30-... - PVDF plastic

Designation example:

Product Code: **PVC - ASVF-30 - aaa**

material
type
ØDA

Dimensions

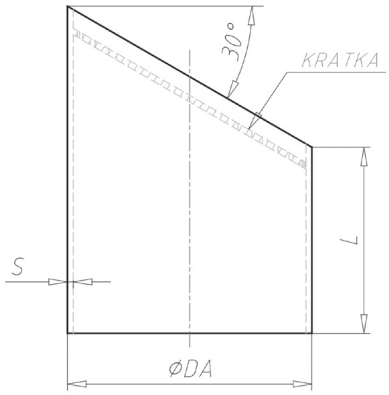

$Ø_{DA}$ [mm]	L [mm]	Thickness of S wall [mm]				
		PVC / white PVC	PP	PPs	PE	PP-EL-s
75	100	1.8	1.9	3.0	4.5	3.0
90	100	1.8	2.2	3.0	5.4	3.0
110	100	1.8	2.7	3.0	3.4	3.0
125	100	1.8	3.1	3.0	3.9	3.0
140	100	1.8	3.5	3.0	4.3	3.0
160	100	1.8	4.0	3.0	4.0	3.0
180	150	1.8	4.4	3.0	5.5	3.0
200	150	1.8	3.0	3.0	6.2	3.0
225	150	1.8	5.5	3.5	6.9	3.5
250	150	2.0	3.5	3.5	6.2	3.5
280	200	2.3	6.9	3.5	8.6	3.5
315	200	2.5	5.0	5.0	7.7	5.0
355	200	2.9	5.0	5.0	10.9	5.0
400	200	3.2	6.0	6.0	12.3	6.0
450	250	3.6	5.0	5.0	5.0	5.0
500	250	4.0	5.0	5.0	5.0	5.0
560	250	-	6.0	6.0	6.0	6.0
600	300	5.0	6.0	6.0	6.0	6.0
630	300	-	6.0	6.0	6.0	6.0
700	350	6.0	6.0	6.0	6.0	6.0
710	350	-	6.0	6.0	6.0	6.0
800	400	8.0	8.0	8.0	8.0	8.0

The Ø 560, 630 i 710 angle take-offs are not available in PVC

ALNOR® ventilation systems
is a legally protected trademark and technical patent. All rights reserved.

Plastic end cap for round ducts

PVC-CPF



Description

Plastic end cap for round ducts with socket. Manufactured by the process of injection moulding (up to Ø 400) or prefabricated (from Ø 450).

Available materials - designation example

PVC-CPF-... - PVC polyvinyl chloride
PPs-CPF-... - PPs flame resistant polypropylene

Available materials - upon special order

PVCW-CPF-... - white PVC polyvinyl chloride
PP-CPF-... - PP polypropylene
PPELs-CPF-... - PP-EL-s flame resistant electrically conductive polypropylene
PE-CPF-... - PE polyethylene
PVDF-CPF-... - PVDF plastic

Designation example:

Product Code: **PVC - CPF - aaa**

material
type
ØDA

Dimensions

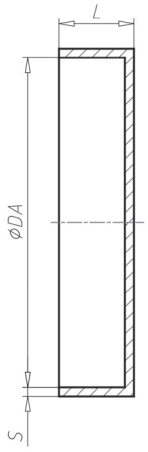

	PVC / PVCW		PE / PP / PPs / PP-EL-s / PVDF	
Ø [mm]	L [mm]	Min. S [mm]	L [mm]	Min. S [mm]
50	25	3.0	25	3.0
63	25	3.0	25	3.0
75	25	3.0	25	3.0
90	25	3.0	25	3.0
110	25	3.0	25	3.0
125	25	3.0	25	3.0
140	25	3.0	25	3.0
160	25	3.0	25	3.0
180	25	3.0	25	3.0
200	25	3.0	25	3.0
225	25	3.0	25	3.0
250	25	3.0	25	3.0
280	25	3.0	25	3.0
315	25	3.0	25	3.0
355	25	3.0	25	3.0
400	25	3.0	25	3.0
450	25	3.0	25	3.0
500	30	6.0	30	6.0
560	-	-	40	60
600	40	6.0	40	6.0
630	-	-	40	6.0
700	40	8.0	40	8.0
710	-	-	40	8.0
800	50	8.0	50	8.0

ALNOR® ventilation systems
is a legally protected trademark and technical patent. All rights reserved.

Plastic flange socket

PVC-FLSF



Description

Plastic flange socket, manufactured from prefabricates. It is used to connect flange components in round plastic ventilation ducts - e.g. in fans or other elements which are easy to disassemble. It is recommended to use the EPDM PVC-GASKET for flange connections.

Available materials - designation example

PVC-FLSF-... - PVC polyvinyl chloride
PPs-FLSF-... - PPs flame resistant polypropylene

Available materials - upon special order

PVCW-FLSF-... - white PVC polyvinyl chloride
PP-FLSF-... - PP polypropylene
PPELs-FLSF-... - PP-EL-s flame resistant electrically conductive polypropylene
PE-FLSF-... - PE polyethylene
PVDF-FLSF-... - PVDF plastic

Designation example:

Product Code: **PVC - FLSF - aaa**

material
type
ØDA

Dimensions

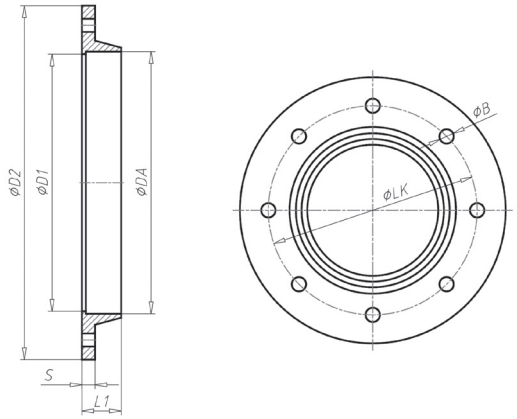

PVC / PVCW / PP / PPs / PE / PP-EL-s

$Ø_{DA}$ [mm]	$ØD_1$ [mm]	$ØD_2$ [mm]	$Ø_{LK}$ [mm]	L_1 [mm]	S [mm]
50	47	125	95	30	8
63	58	132	102	30	8
75	69	140	110	29	8
90	84	158	128	29	8
110	106	170	150	30	8
125	122	185	165	30	8
140	136	200	175	30	8
160	156	230	200	30	8
180	176	250	220	30	8
200	196	270	240	30	8
225	222	295	265	30	8
250	246	320	290	30	8
280	275	355	325	30	10
315	310	395	350	30	10
355	349	435	400	30	10
400	393	475	445	30	10
450	446	560	510	60	12
500	496	610	560	60	12
560	556	660	610	60	12
600	596	710	660	80	12
630	626	760	710	80	12
700	696	810	760	80	12
710	706	810	760	80	12
800	796	916	866	80	12

ALNOR® ventilation systems
is a legally protected trademark and technical patent. All rights reserved.

EPDM flange gasket

PVC-GASK



Description

EPDM flange gasket is used to connect plastic elements of a ventilation system with flange endings.

Available materials - designation example

PVC-GASK-30-... - EPDM gasket

Designation example:

Product Code: **PVC - GASK - aaa**

material
type
ØDA

Dimensions

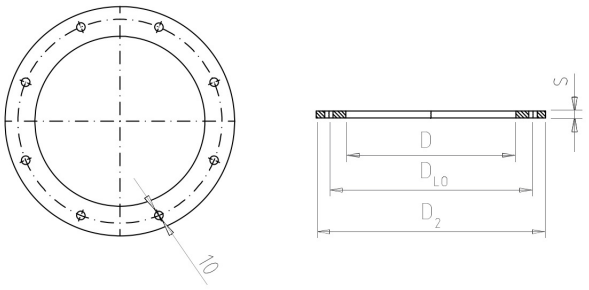

PVC / PVCW / PP / PPs / PE / PP-EL-s			
$Ø_{DA}$ [mm]	ØLK [mm]	$ØD_2$ [mm]	S [mm]
50	95	125	2
63	102	132	2
75	110	140	2
90	128	158	2
110	150	170	2
125	165	185	2
140	175	200	2
160	200	230	2
180	220	250	2
200	240	270	2
225	265	295	2
250	290	320	2
280	325	355	2
315	350	395	2
355	400	435	2
400	445	475	2
450	510	560	2
500	560	610	2
560	610	660	2
600	660	710	2
630	710	760	2
700	760	810	2
710	760	810	2
800	866	916	2

ALNOR® ventilation systems
is a legally protected trademark and technical patent. All rights reserved.

Plastic circular air diffuser

PVC-NKSD-R



Description

Round plastic swirl air diffuser, made of sheets suitable for a given material by water jet cutting. The method allows the production of air diffusers in various configurations (number and shape of vanes).

Available materials

PVC-NKSD-R-… - PVC polyvinyl chloride
PP-NKSD-R-… - PP polypropylene
PPs-NKSD-R-… - PPs flame resistant polypropylene
PE-NKSD-R-… - PE polyethylene

Available materials - upon special order:

PVCW-NKSD-R- … - White PVC polyvinyl chloride
PPELs-NKSD-R-… - PP-EL-s flame resistant electrically conductive polypropylene
PVDF-NKSD-R-… - PVDF plastic

Designation example

Product Code: **PVC - NKSD-R - aaa**

material
type
ØD

Dimensions

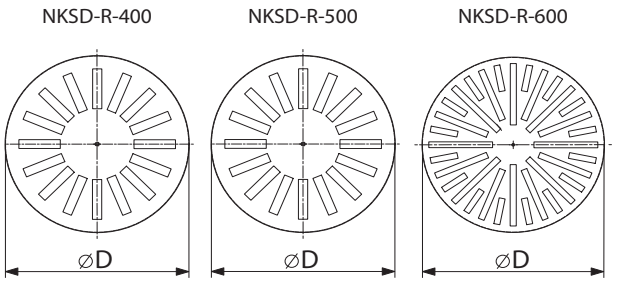

Product code	*ØD [mm]*	*No. of vanes [pcs.]*	*Sheet thickness [mm]*
PVC-NKSD-R-400	400	16	6
PVC-NKSD-R-500	500	16	6
PVC-NKSD-R-600	600	32	6

ALNOR® ventilation systems
is a legally protected trademark and technical patent. All rights reserved.

Rectangular ventilation grille made of plastics

PVC-SHR-A / PVC-SHR-C / PVC-SHR-S



Description

Plastic supply and extract ventilation grille with an adjustable row of front blades (version A) or front and back blades (version C) or with fixed blades at an angle of 45 ° (version S). The advantage of PVC-SHR-S grille is that it can be custom made in any size.
For installation on round ducts, it's recommended to use PVC-SHR-RMO mounting frame.

Available materials:

PVC-SHR-…-… -…. - PVC polyvinyl chloride
PP-SHR-…-… -…. - PP polypropylene
PPs-SHR-…-… -…. - PPs flame resistant polypropylene
PE-SHR-…-… -…. - PE polyethylene

Available materials - upon special order:

PVCW-SHR-…-… -…. - White PVC polyvinyl chloride
PPELs-SHR-…-… -…. - PP-EL-s flame resistant electrically conductive polypropylene
PVDF-SHR-…-… -…. - PVDF plastic

Designation example:

Product Code: **PVC - SHR - S - aaa - bbb**

material
type
blades
length
width

Dimensions

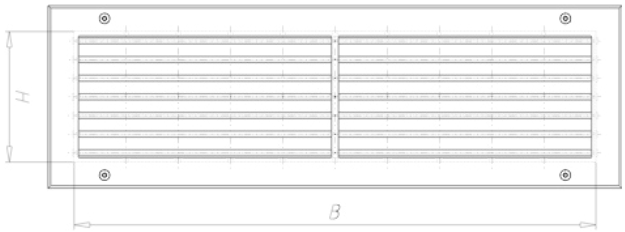

PVC / PVCW / PP / PPs / PE / PP-EL-s	
B [mm]	H [mm]
300	100
400	100
500	100
600	100
300	150
400	150
500	150
600	150
300	200
400	200
500	200
600	200
300	250
400	250
500	250
600	250

PVC-SHR-S grilles can be custom made in any size.

ALNOR® ventilation systems
is a legally protected trademark and technical patent. All rights reserved.

Mounting frame for ventilation grilles made of plastics

PVC-SHR-RMO



Description

Mounting frame for the installation of rectangular ventilation grille PVC-SHR-A/-C/-S made of plastic onto the circular duct.

Available materials:

PVC-SHR-RMO-…	– PVC polyvinyl chloride
PP-SHR-RMO-…	– PP polypropylene
PPs-SHR-RMO-…	– PPs flame resistant polypropylene
PE-SHR-RMO-…	– PE polyethylene

Available materials - upon special order:

PVCW-SHR-RMO-…	– White PVC polyvinyl chloride
PPELs-SHR-RMO-…	– PP-EL-s flame resistant electrically conductive polypropylene
PVDF-SHR-RMO-…	– PVDF plastic

Designation example:

Product Code: **PVC - SHR-RMO - aaa - bbb - ccc**

material
type
length
width
diameter

Dimensions

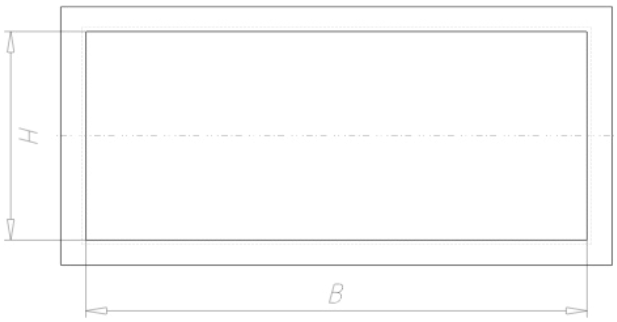

PVC / PVCW / PP / PPs / PE / PP-EL-s	
B *[mm]*	*H [mm]*
300	100
400	100
500	100
600	100
300	150
400	150
500	150
600	150
300	200
400	200
500	200
600	200
300	250
400	250
500	250
600	250

Mounting frames for PVC-SHR-S grilles can be custom made in any size.

ALNOR® ventilation systems
is a legally protected trademark and technical patent. All rights reserved.

Sound attenuator made of plastics

PVC-SILF

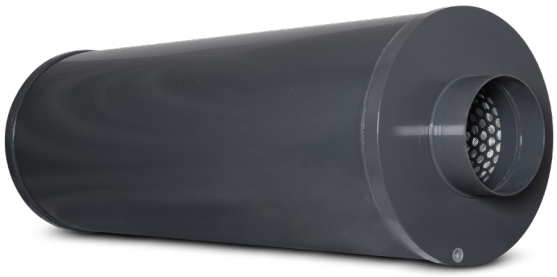

Description

Circular plastic sound attenuator, female connections. Attenuating material made of mineral wool, 10mm thick, inner perforated pipe covered with fiberglass. Acoustic parameters tested by IFI Institute for Industrial Aerodynamics GmbH in accordance with the DIN EN ISO 7234 standard.
Lengths available between 500-2000mm.

Available materials - designation example

PVC-SILF-… – PVC polyvinyl chloride
PVC-SILF -PP-… – PP polypropylene
PVC-SILF -PPs-… – PPs flame resistant polypropylene
PVC-SILF -PE-… – PE polyethylene

Available materials - upon special order

PVC-SILF -PVCW-… – white PVC polyvinyl chloride
PVC-SILF -PPELs-… – PP-EL-s flame resistant electrically conductive polypropylene
PVC-SILF -PVDF-… – PVDF plastic

Designation example:

Product Code: **PVC - SILF - aaa - bbb**

material
type
ØDA
length

Dimensions

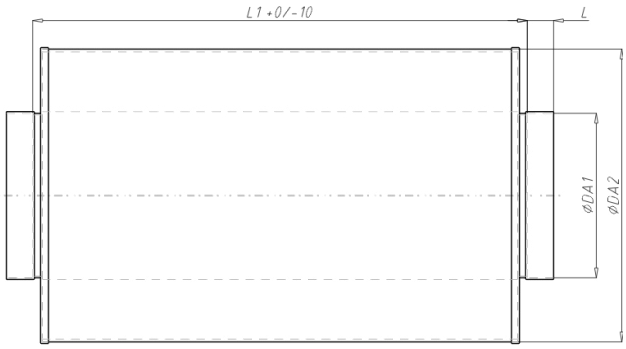

$Ø_{DA1}$ [mm]	$Ø_{DA2}$ [mm]	L_1 [mm]	L [mm]	Wall thickness [mm]			
				PVC/ PVCW	PPs	PP	PE
75	315	500 / 750 / 1000 / 1250 / 1500 / 1750 / 2000	40	2.5	5.0	5.0	7.7
90	315		40	2.5	5.0	5.0	7.7
110	315		40	2.5	5.0	5.0	7.7
125	315		40	2.5	5.0	5.0	7.7
140	355		40	2.9	5.0	5.0	5.50
160	355		40	2.9	5.0	5.0	5.0
180	400		40	3.2	6.0	6.0	5.0
200	400		40	3.2	6.0	6.0	5.0
225	450		40	3.6	5.0	5.0	5.0
250	450		40	3.6	5.0	5.0	5.0
280	500		50	4.0	5.0	5.0	5.0
315	500		50	4.0	5.0	5.0	5.0
355	500		50	4.0	5.0	5.0	5.0
400	600		50	5.0	6.0	6.0	6.0
450	700		50	6.0	6.0	6.0	6.0
500	700		50	6.0	6.0	6.0	6.0
600	800		60	8.0	8.0	8.0	8.0
560	800		60	-	8.0	8.0	8.0
600	800		60	8.0	8.0	8.0	8.0
630	800		70	-	8.0	8.0	8.0
700	900		70	8.0	8.0	8.0	8.0
710	900		80	-	8.0	8.0	8.0
800	1000		80	10.0	10.0	10.0	10.0
900	1100		90	10.0	10.0	10.0	10.0
1000	1200		100	12.0	12.0	12.0	12.0
1200	1400		120	12.0	12.0	12.0	12.0
1250	1400		130	12.0	12.0	12.0	12.0

ALNOR® ventilation systems
is a legally protected trademark and technical patent. All rights reserved.

Sound attenuator made of plastics

PVC-SILF

Dimensions

Attenuation charts:

Diameter Ø110 mm.

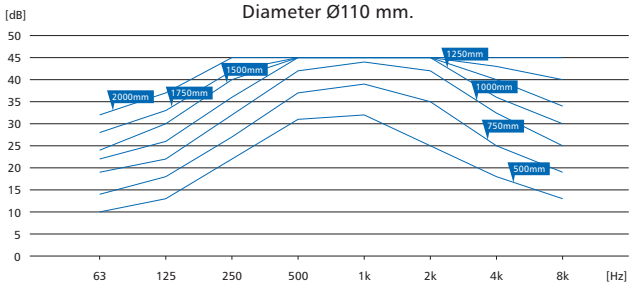

Diameter Ø125 mm.

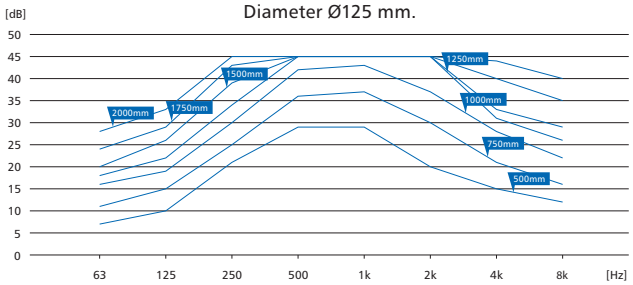

Diameter Ø140 mm.

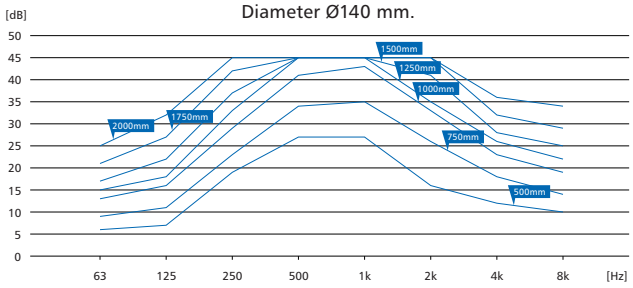

Diameter Ø160 mm.

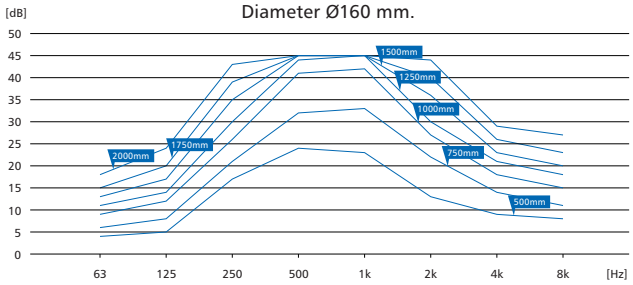

Diameter Ø180 mm.

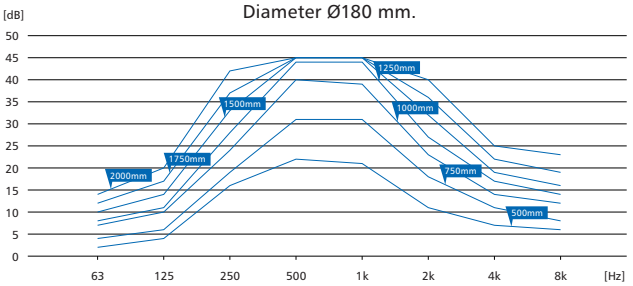

Diameter Ø200 mm.

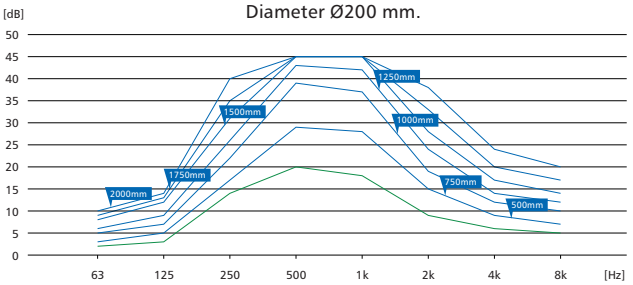

Diameter Ø225 mm.

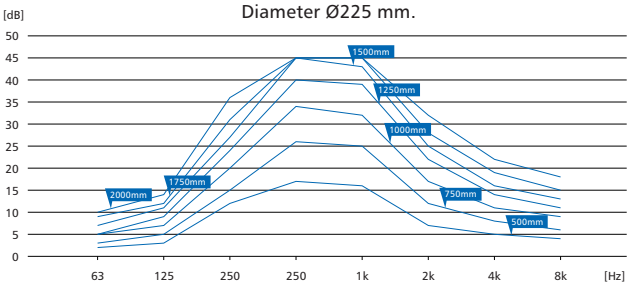

Diameter Ø250 mm.

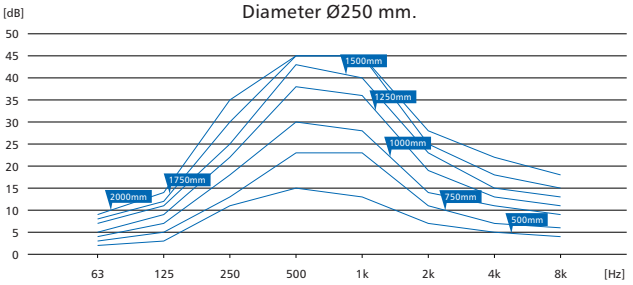

ALNOR® ventilation systems
is a legally protected trademark and technical patent. All rights reserved.

Sound attenuator made of plastics

PVC-SILF

Dimensions

Attenuation charts:

Diameter Ø280 mm.

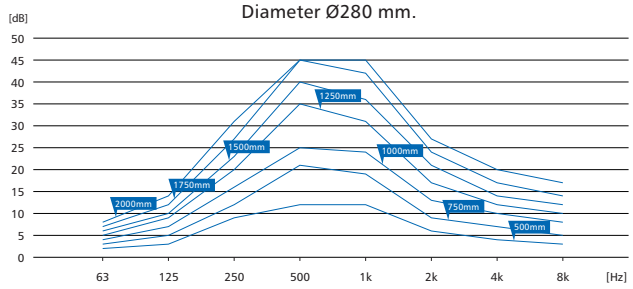

Diameter Ø315 mm.

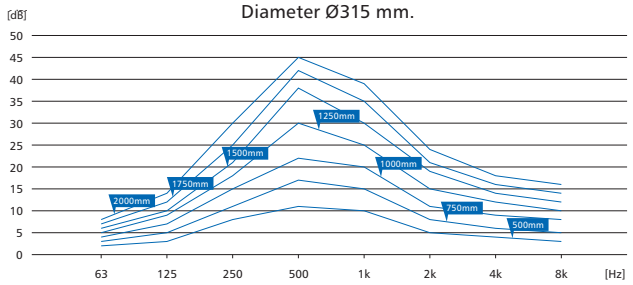

Diameter Ø355 mm.

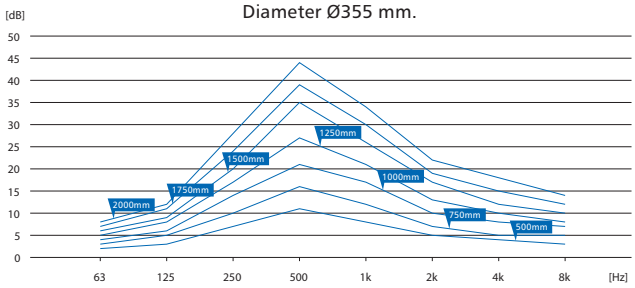

Diameter Ø400 mm.

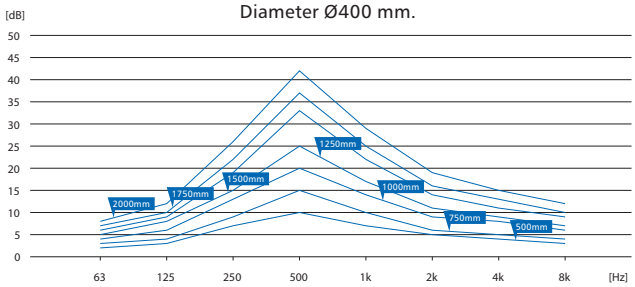

Diameter Ø450 mm.

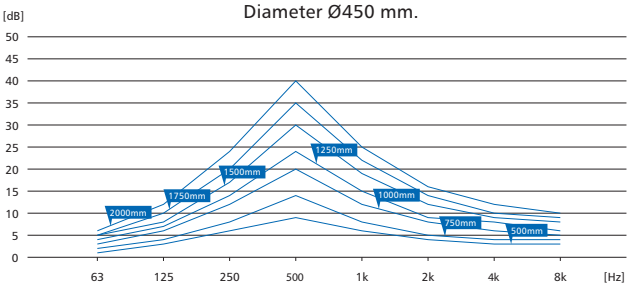

Diameter Ø500 mm.

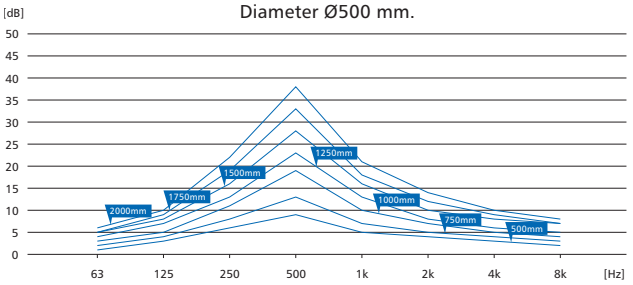

Diameter Ø600 mm.

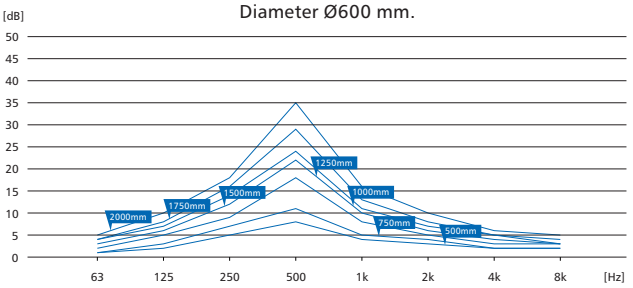

ALNOR® ventilation systems
is a legally protected trademark and technical patent. All rights reserved.

Plastic regulating damper

PVC-DATF-D / PVC-DATF



Description

Plastic regulating damper, with a blade, designed for round ducts, with sockets, connected by welding (or PVC bonding up to Ø 250). Manufactured by the process of injection moulding (up to Ø 400) or prefabricated (from Ø 450).

Available materials - designation example

PVC-DATF-D-... - PVC polyvinyl chloride
PPs-DATF-D-... - PPs flame resistant polypropylene

Available materials - upon special order

PVCW-DATF-D-... - white PVC polyvinyl chloride
PP-DATF-D-... - PP polypropylene
PPELs-DATF-D-... - PP-EL-s flame resistant electrically conductive polypropylene
PE-DATF-D-... - PE polyethylene
PVDF-DATF-D-... - PVDF plastic

Designation example:

Product Code: **PVC - DATF-D - aaa**

material
type
ØDA

Dimensions

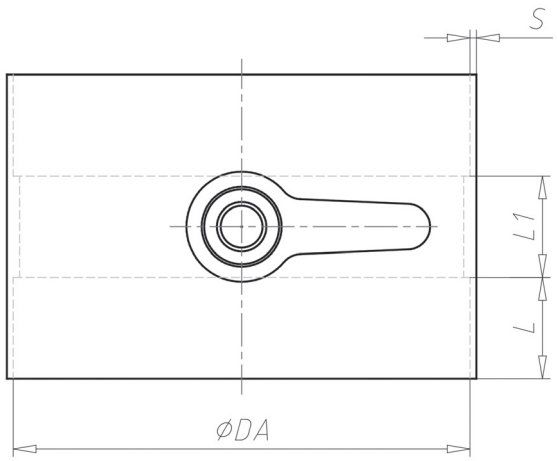

PVC / PVCW				
$Ø_1$ [mm]	L [mm]	L_1 [mm]	Tolerance [mm]	Min. S [mm]
50	25	80	0.3	2.5
63	25	80	0.3	2.5
75	40	40	0.3	2.5
90	40	40	0.3	2.5
110	40	40	0.3	2.5
125	40	40	0.3	2.5
140	40	40	0.4	2.5
160	40	40	0.4	2.5
180	40	40	0.4	2.5
200	40	40	0.5	2.5
225	40	40	0.5	2.5
250	40	40	0.5	2.5
280	50	40	0.6	2.5
315	50	40	0.6	2.5
355	50	40	0.7	3.0
400	50	40	0.7	3.0
450	60	320	0.8	3.6
500	60	360	0.9	4.0
560	-	-	-	-
600	70	450	1.0	5.0
630	-	-	-	-
700	70	520	2.5	6.0
710	-	-	-	-
800	80	560	3.0	8.0

ALNOR® ventilation systems
is a legally protected trademark and technical patent. All rights reserved.

Plastic regulating damper

PVC-DATF-D / PVC-DATF

Dimensions

PP / PPs / PE / PP-EL-s				
$Ø_1$ [mm]	L [mm]	L_1 [mm]	Tolerance [mm]	Min. S [mm]
50	25	80	0.7	3.0
63	25	80	0.7	3.0
75	40	40	0.7	3.0
90	40	40	0.9	3.0
110	40	40	1.0	3.0
125	40	40	1.2	3.0
140	40	40	1.3	3.0
160	40	40	1.5	3.0
180	40	40	1.7	3.5
200	40	40	1.8	3.5
225	40	40	1.9	3.5
250	40	40	2.0	3.5
280	50*	40*	2.2	3.5
315	50*	40*	2.4	4.0
355	50*	40*	2.4	4.0
400	50*	40*	2.4	4.5
450	60	320	3.5	5.0
500	60	360	4.0	5.0
560	70	410	4.5	6.0
600	70	450	4.5	6.0
630	70	480	4.5	6.0
700	70	520	4.5	8.0
710	80	530	4.5	8.0
800	80	560	4.5	8.0

*Dampers manufactured in accordance with the DIN 1946 standard, where PP/PE: L=35mm; L1-70mm.

ALNOR® ventilation systems
is a legally protected trademark and technical patent. All rights reserved.

Regulating air damper for the actuator installation

PVC-DATFM



Description

A plastic regulating air damper for round ducts, prepared for the installation of an actuator, with female connections, joining by welding (or PVC gluing to Ø250). Manufactured by the process of injection moulding (up to Ø400) or prefabricated (from Ø450).

Available materials - designation example

PVC-DATFM-… - PVC polyvinyl chloride
PP-DATFM-… - PP polypropylene
PPs-DATFM-… - PPs flame resistant polypropylene
PE-DATFM-… - PE polyethylene

Available materials - upon special order

PVCW-DATFM-… - white PVC polyvinyl chloride
PPELs-DATFM-… - PP-EL-s flame resistant electrically conductive polypropylene
PVDF-DATFM… - PVDF plastic

Designation example:

Product Code: **PVC - DATFM - aaa**

material
type
ØDA

Dimensions

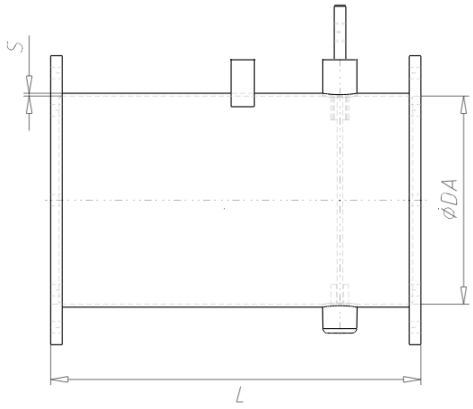

PVC / PVCW			
Ø [mm]	L [mm]	Tolerance [mm]	Min. S [mm]
75	320	0.3	2.5
90	320	0.3	2.5
110	320	0.3	2.5
125	320	0.3	2.5
140	320	0.4	2.5
160	320	0.4	2.5
180	320	0.4	2.5
200	350	0.5	2.5
225	350	0.5	2.5
250	350	0.5	2.5
280	400	0.6	2.5
315	400	0.6	2.5
355	400	0.7	3.0
400	400	0.7	3.0
450	378	0.8	3.6
500	418	0.9	4.0
560	-	-	-
600	458	1.0	5.0
630	-	-	-
700	528	2.5	6.0
710	-	-	-
800	568	3.0	8.0
900	658	3.0	8.0
1000	748	4.0	10.0
1200	968	4.0	12.0
1250	968	4.0	12.0

ALNOR® ventilation systems
is a legally protected trademark and technical patent. All rights reserved.

Regulating air damper for the actuator installation

PVC-DATFM

Dimensions

PE / PP / PPs / PP-EL-s / PVDF			
Ø [mm]	L [mm]	Tolerance [mm]	Min. S [mm]
75	320	0.7	3.0
90	320	0.	3.0
110	320	1.0	3.0
125	320	1.2	3.0
140	320	1.3	3.0
160	320	1.5	3.0
180	320	1.7	3.5
200	350	1.8	3.5
225	350	1.9	3.5
250	350	2.0	3.5
280	400	2.2	3.5
315	400	2.4	4.0
355	400	2.4	4.0
400	400	3.5	4.5
450	378	4.0	5.0
500	418	4.5	5.0
560	418	4.5	6.0
600	458	4.5	6.0
630	488	4.5	6.0
700	528	4.5	8.0
710	538	4.5	8.0
800	568	4.5	8.0
900	658	4.5	10.0
1000	748	5.0	10.0
1200	968	5.0	12.0
1250	968	5.0	12.0

ALNOR® ventilation systems
is a legally protected trademark and technical patent. All rights reserved.

Multi-blade back-draft damper made of plastics

PVC-DASQF-V / PVC-DASQF-H



Description

A multi-blade plastic back-draft damper for round ducts made of prefabricated components. The back-draft damper is available in two versions - for vertical and horizontal installation.

Available versions:
PVC-DASQFFM-…-V - vertial installation
PVC-DASQFFM-…-H - horizontal installation

Dostępne materialy – Designation example:
PVC-DASQF-…-… - PVC polyvinyl chloride
PP-DASQF -…-… - PP polypropylene
PPs-DASQF -…-… - PPs flame resistant polypropylene
PE-DASQF-…-… - PE polyethylene

Available materials - upon special order
PVCW-DASQF -…-… - White PVC polyvinyl chloride
PPELs-DASQF -…-… - PP-EL-s flame resistant electrically conductive polypropylene
PVDF-DASQF-…-… - PVDF plastic

Designation example:
Product Code: **PVC - DASQF - aaa - bbb**

material
type
ØDA
installation

Dimensions

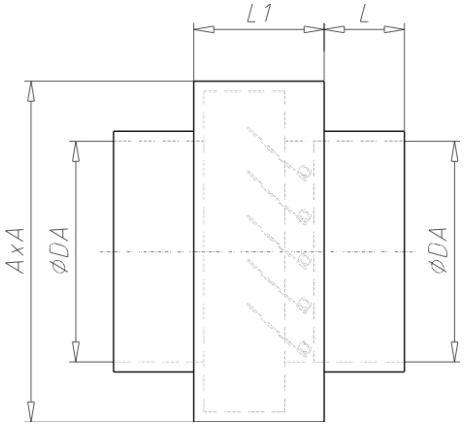

ØDA [mm]	PVC / PVCW				PE / PP / PPs / PP-EL-s / PVDF			
	L [mm]	L_1 [mm]	AxA	Wall thickness	L [mm]	L1 [mm]	AxA	Wall thickness
110	40	65	170	5.0	40	65	170	5.0
125	40	65	170	5.0	40	65	170	5.0
140	40	70	170	5.0	40	70	170	5.0
160	40	70	205	5.0	40	70	205	5.0
180	40	70	205	5.0	40	70	205	5.0
200	40	70	255	5.0	40	70	255	5.0
225	40	80	255	5.0	40	80	255	5.0
250	40	80	305	5.0	40	80	305	5.0
280	50	90	305	6.0	50	90	305	6.0
315	50	90	358	6.0	50	90	358	6.0
355	50	90	408	6.0	50	90	408	6.0
400	50	120	474	6.0	50	120	474	6.0
450	50	120	512	6.0	50	120	512	6.0
500	50	120	560	6.0	50	120	560	6.0
560	-	-	-	-	60	120	712	6.0
600	60	120	712	6.0	60	120	712	6.0
630	-	-	-	-	70	120	712	6.0

ALNOR® ventilation systems
is a legally protected trademark and technical patent. All rights reserved.

Roof base made of plastics

PVC-TAGF



Description

The TAGF plastic roof base is used for correct installation of supply and extract vents in ventilation systems. The roof base is available in various angular versions (roof pitch angle): 0°, 1-22°, 23-45°.



Optionally, the roof base can be equipped with a PVC-BAVE collar (roof base drip tray).

Available materials - designation example

PVC-TAGF-…-… - PVC polyvinyl chloride
PP-TAGF-…-… - PP polypropylene
PPs-TAGF-…-… - PPs flame resistant polypropylene
PE-TAGF-…-... - PE polyethylene

Available materials - upon special order

PVCW-TAGF-…-… - White PVC polyvinyl chloride
PPELs-TAGF-…-… - PP-EL-s flame resistant electrically conductive polypropylene
PVDF-TAGF-…-… - PVDF plastic

Designation example:

Product Code: **PVC - TAGF - aaa - bb**

material
type
ØDA
angle

Dimensions

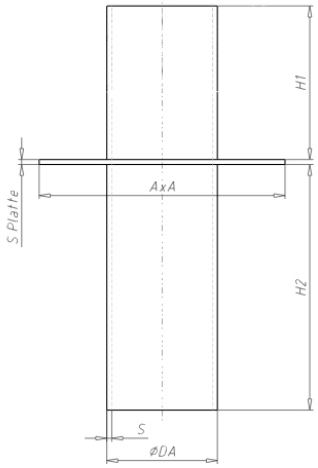

PVC / PVCW

Ø [mm]	H_1 [mm]	H_2 [mm]	A [mm]	Thickness S plate [mm]	Pipe thickness S [mm]	
					PVC	PVCW
110	250	400	350	8.0	1.8	1.8
125	250	400	350	8.0	1.8	1.8
140	250	400	350	8.0	1.8	1.8
160	250	400	400	8.0	1.8	1.8
180	250	400	400	8.0	1.8	1.8
200	250	400	400	8.0	1.8	1.8
225	250	400	450	10.0	1.8	1.8
250	250	400	450	10.0	2.0	2.0
280	250	400	500	10.0	2.3	2.3
315	250	400	500	10.0	2.5	2.5
355	250	400	550	10.0	2.9	2.9
400	250	400	600	10.0	3.2	3.2
450	250	400	750	10.0	5.0	5.0
500	250	400	800	10.0	5.0	5.0
560	-	-	-	-	-	-
600	250	400	900	10.0	6.0	6.0
630	-	-	-	-	-	-
700	250	400	1100	12.0	6.0	6.0
710	-	-	-	-	-	-
800	250	400	1200	12.0	8.0	8.0
900	250	400	1300	12.0	8.0	8.0
1000	250	400	1400	12.0	10.0	10.0
1200	250	400	1600	12.0	12.0	12.0
1250	250	400	1650	12.0	12.0	12.0

ALNOR® ventilation systems
is a legally protected trademark and technical patent. All rights reserved.

Roof base made of plastics

PVC-TAGF

Dimensions

PP / PPs / PE / PP-EL-s								
Ø [mm]	H_1 [mm]	H_2 [mm]	A [mm]	Thickness S plate [mm]	Pipe thickness S [mm]			
					PPs	PP	PPE	PP-EL-s
110	250	400	350	8.0	3.0	2.7	3.4	3.0
125	250	400	350	8.0	3.0	3.1	3.9	3.0
140	250	400	350	8.0	3.0	3.5	4.3	3.0
160	250	400	400	8.0	3.0	4.0	4.0	3.0
180	250	400	400	8.0	3.0	4.4	5.5	3.0
200	250	400	400	8.0	3.0	3.0	6.2	3.0
225	250	400	450	10.0	3.5	5.5	6.9	3.5
250	250	400	450	10.0	3.5	3.5	6.2	3.5
280	250	400	500	10.0	3.5	6.9	8.6	3.5
315	250	400	500	10.0	5.0	5.0	7.7	5.0
355	250	400	550	10.0	5.0	5.0	10.9	5.0
400	250	400	600	10.0	6.0	6.0	12.3	6.0
450	250	400	750	10.0	6.0	6.0	6.0	6.0
500	250	400	800	10.0	6.0	6.0	6.0	6.0
560	250	400	860	10.0	6.0	6.0	6.0	6.0
600	250	400	900	10.0	6.0	6.0	6.0	6.0
630	250	400	930	10.0	6.0	6.0	6.0	6.0
700	250	400	1100	12.0	6.0	6.0	6.0	6.0
710	250	400	1100	12.0	6.0	6.0	6.0	6.0
800	250	400	1200	12.0	8.0	8.0	8.0	8.0
900	250	400	1300	12.0	8.0	8.0	8.0	8.0
1000	250	400	1400	12.0	10.0	10.0	10.0	10.0
1200	250	400	1600	12.0	12.0	12.0	12.0	12.0
1250	250	400	1650	12.0	12.0	12.0	12.0	12.0

Roof pitch angle: 1-22°

PVC / PVCW						
Ø [mm]	H_1 [mm]	H_2 [mm]	A [mm]	Thickness S plate [mm]	Pipe thickness S [mm]	
					PVC	PVCW
110	300	430	400	8.0	1.8	1.8
125	300	430	400	8.0	1.8	1.8
140	300	435	400	8.0	1.8	1.8
160	300	440	450	8.0	1.8	1.8
180	300	445	450	8.0	1.8	1.8
200	300	450	450	8.0	1.8	1.8
225	300	455	500	10.0	1.8	1.8
250	300	460	500	10.0	2.0	2.0
280	300	470	550	10.0	2.3	2.3
315	300	480	550	10.0	2.5	2.5
355	300	490	600	10.0	2.9	2.9
400	300	500	650	10.0	3.2	3.2
450	300	550	800	10.0	3.6	3.6
500	300	550	850	10.0	4.0	4.0
600	300	600	950	10.0	5.0	5.0
630	-	-	-	-	-	-
700	300	650	1200	12.0	6.0	6.0
710	-	-	-	-	-	-
800	300	700	1300	12.0	8.0	8.0
900	300	750	1400	12.0	8.0	8.0
1000	300	800	1500	12.0	10.0	10.0
1200	300	850	1700	12.0	12.0	12.0
1250	300	850	1700	12.0	12.0	12.0

PP / PPs / PE / PP-EL-s								
Ø [mm]	H_1 [mm]	H_2 [mm]	A [mm]	Thickness S plate [mm]	Pipe thickness S [mm]			
					PPs	PP	PPE	PP-EL-s
110	300	430	400	8.0	3.0	2.7	3.4	3.0
125	300	430	400	8.0	3.0	3.1	3.9	3.0
140	300	435	400	8.0	3.0	3.5	4.3	3.0
160	300	440	450	8.0	3.0	4.0	4.0	3.0
180	300	445	450	8.0	3.0	4.4	5.5	3.0
200	300	450	450	8.0	3.0	3.0	6.2	3.0
225	300	455	500	10.0	3.5	5.5	6.9	3.5
250	300	460	500	10.0	3.5	3.5	6.2	3.5
280	300	470	550	10.0	3.5	6.9	8.6	3.5
315	300	480	550	10.0	5.0	5.0	7.7	5.0
355	300	490	600	10.0	5.0	5.0	10.9	5.0
400	300	500	650	10.0	6.0	6.0	12.3	6.0
450	300	550	800	10.0	6.0	6.0	6.0	6.0
500	300	550	850	10.0	6.0	6.0	6.0	6.0
560	300	600	910	10.0	6.0	6.0	6.0	6.0
600	300	600	950	10.0	6.0	6.0	6.0	6.0
630	300	600	1000	10.0	6.0	6.0	6.0	6.0
700	300	650	1200	12.0	6.0	6.0	6.0	6.0
710	300	650	1200	12.0	6.0	6.0	6.0	6.0
800	300	700	1300	12.0	8.0	8.0	8.0	8.0
900	300	750	1400	12.0	8.0	8.0	8.0	8.0
1000	300	800	1500	12.0	10.0	10.0	10.0	10.0
1200	300	850	1700	12.0	12.0	12.0	12.0	12.0
1250	300	850	1700	12.0	12.0	12.0	12.0	12.0

ALNOR® ventilation systems
is a legally protected trademark and technical patent. All rights reserved.

Roof base made of plastics

PVC-TAGF

Dimensions

Roof pitch angle: 23-45°

PVC / PVCW						
Ø [mm]	H_1 [mm]	H_2 [mm]	A [mm]	Thickness S plate [mm]	Pipe thickness S [mm]	
					PVC	PVCW
110	350	450	450	8.0	1.8	1.8
125	350	460	450	8.0	1.8	1.8
140	350	470	450	8.0	1.8	1.8
160	350	480	500	8.0	1.8	1.8
180	350	490	500	8.0	1.8	1.8
200	350	500	500	8.0	1.8	1.8
225	350	510	550	10.0	1.8	1.8
250	350	525	550	10.0	2.0	2.0
280	350	540	600	10.0	2.3	2.3
315	350	550	600	10.0	2.5	2.5
355	350	570	650	10.0	2.9	2.9
400	350	600	700	10.0	3.2	3.2
450	350	700	1050	10.0	3.6	3.6
500	350	800	1100	10.0	4.0	4.0
560	-	-	-	-	-	-
600	350	900	1200	10.0	5.0	5.0
630	-	-	-	-	-	-
700	350	1050	1400	12.0	6.0	6.0
710	-	-	-	-	-	-
800	350	1150	1600	12.0	8.0	8.0
900	350	1250	1750	12.0	8.0	8.0
1000	350	1350	1900	12.0	10.0	10.0
1200	350	1650	2150	12.0	12.0	12.0
1250	350	1650	2200	12.0	12.0	12.0

PP / PPs / PE / PP-EL-s								
Ø [mm]	H_1 [mm]	H_2 [mm]	A [mm]	Thickness S plate [mm]	Pipe thickness S [mm]			
					PPs	PP	PPE	PP-EL-s
110	350	450	450	8.0	3.0	2.7	3.4	3.0
125	350	460	450	8.0	3.0	3.1	3.9	3.0
140	350	470	450	8.0	3.0	3.5	5.4	3.0
160	350	480	500	8.0	3.0	4.0	4.0	3.0
180	350	490	500	8.0	3.0	4.4	5.5	3.0
200	350	500	500	8.0	3.0	3.0	6.2	3.0
225	350	510	550	10.0	3.5	5.5	6.9	3.5
250	350	525	550	10.0	3.5	3.5	6.2	3.5
280	350	540	600	10.0	3.5	6.9	8.6	3.5
315	350	550	600	10.0	5.0	5.0	7.7	5.0
355	350	570	650	10.0	5.0	5.0	10.9	5.0
400	350	600	700	10.0	6.0	6.0	12.3	6.0
450	350	700	1050	10.0	6.0	6.0	6.0	6.0
500	350	800	1100	10.0	6.0	6.0	6.0	6.0
560	350	900	1160	10.0	6.0	6.0	6.0	6.0
600	350	900	1200	10.0	6.0	6.0	6.0	6.0
630	350	950	1230	10.0	6.0	6.0	6.0	6.0
700	350	1050	1400	12.0	6.0	6.0	6.0	6.0
710	350	1050	1400	12.0	6.0	6.0	6.0	6.0
800	350	1150	1600	12.0	8.0	8.0	8.0	8.0
900	350	1250	1750	12.0	8.0	8.0	8.0	8.0
1000	350	1350	1900	12.0	10.0	10.0	10.0	10.0
1200	350	1650	2150	12.0	12.0	12.0	12.0	12.0
1250	350	1650	2200	12.0	12.0	12.0	12.0	12.0

ALNOR® ventilation systems
is a legally protected trademark and technical patent. All rights reserved.

Plastic roof exhaust vent

PVC-WDF



Description

Plastic flange socket, manufactured from prefabricates. It is used to connect flange components in round plastic ventilation ducts - e.g. in fans or other elements which are easy to disassemble. It is recommended to use the EPDM PVC-GASKET for flange connections.

Available materials - designation example

PVC-WDF-... - PVC polyvinyl chloride
PPs-WDF-... - PPs flame resistant polypropylene

Available materials - upon special order

PVCW-WDF-... - white PVC polyvinyl chloride
PP-WDF-... - PP polypropylene
PPELs-WDF-... - PP-EL-s flame resistant electrically conductive polypropylene
PE-WDF-... - PE polyethylene
PVDF-WDF-... - PVDF plastic

Designation example:

Product Code: **PVC - WDF - aaa**

material
type
ØDA

Dimensions

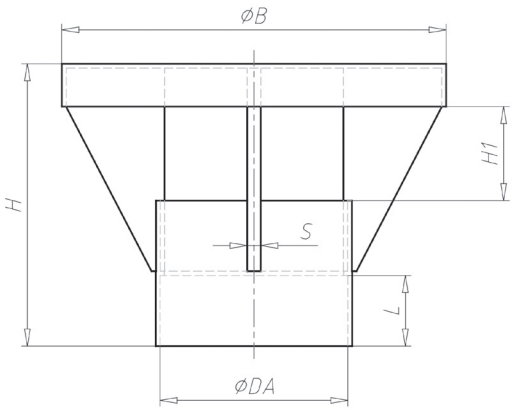

PVC / PVCW					
Ø [mm]	L [mm]	H [mm]	H_1 [mm]	ØB [mm]	S [mm]
75	40	165	55	160	8.0
90	40	165	55	200	8.0
110	40	165	55	225	8.0
125	40	175	65	225	8.0
140	40	180	70	250	8.0
160	40	190	80	250	8.0
180	40	200	90	280	8.0
200	40	210	100	315	8.0
225	40	225	115	355	8.0
250	40	235	125	400	8.0
280	50	275	165	450	10.0
315	50	295	185	500	10.0
355	50	305	195	550	10.0
400	50	335	225	600	10.0
450	50	375	225	650	10.0
500	50	395	275	700	10.0
560	-	-	-	-	-
600	60	480	340	800	10.0
630	-	-	-	-	-
700	70	585	425	900	10.0
710	-	-	-	-	-
800	80	605	425	100	10.0

ALNOR® ventilation systems
is a legally protected trademark and technical patent. All rights reserved.

Plastic roof exhaust vent

PVC-WDF

Dimensions

PP / PPs / PE / PP-EL-s					
Ø [mm]	L [mm]	H [mm]	H_1 [mm]	ØB [mm]	S [mm]
75	40	165	55	160	8.0
90	40	165	55	200	8.0
110	40	165	55	225	8.0
125	40	175	65	225	8.0
140	40	180	70	250	8.0
160	40	190	80	250	8.0
180	40	200	90	280	8.0
200	40	210	100	315	8.0
225	40	225	115	355	8.0
250	40	235	125	400	8.0
280	50	275	165	450	10.0
315	50	295	185	500	10.0
355	50	305	195	550	10.0
400	50	335	225	600	10.0
450	50	375	225	650	10.0
500	50	395	275	700	10.0
560	60	425	305	750	10.0
600	60	480	340	800	10.0
630	70	540	425	850	10.0
700	70	585	425	900	10.0
710	70	605	425	900	10.0
800	80	605	425	100	10.0

ALNOR® ventilation systems
is a legally protected trademark and technical patent. All rights reserved.

Download Wentyle
Download AlnorCAM
Order at B2B

Plastic Rectangular Ventilation Systems

The manufacturer reserves the right to amend product dimensions and technical data due to their constant improvement

ALNOR® ventilation systems
is a legally protected trade mark and technological patent. All rights to change or amend are reserved.

About the system

Rectangular ducts are manufactured from the highest quality thermoplastics. Properly selected type of sheet (extruded, pressed or foamed), material thickness or welding method (hot air, welding, extrusion welding) allow to meet the various installation expectations.

Types of plastics:

To better distinguish the materials that in their natural form, they are generally semi-transparent, we use standardized colours:



- **PE**
- **PP**
- **PPs**
- **PVC**
- **PVCW**
- **PVDF**

Thickness

Width or height of the longer side [mm]	*Sheet thickness [mm]*
200	4
250	4
300	4
400	4
500	5
600	5
800	6
1000	8
1200	10

Custom-made ducts of other thicknesses are available on request, with additional reinforcements.

The characteristics of plastics

PE – Polyethylene
PE-100 has the most versatile advantages among materials used in the chemical industry. PE sheets are UV-stabilised, corrosion resistant, resistant to low and high temperatures (external use). The product's life expectancy reaches even 50 years!

PP – Polypropylene
The most widely used material for chemical applications. High chemical resistance, rigidity and high stress crack resistance. There are few types of polypropylene.

PP-H – homopolymer
PPs – low flammability homopolymer
PPs-EL – electrically conductive copolymer, flame-retardant

PVC – polyvinyl chloride
PVC-U = PVC unplasticized is an amorphous thermoplastic with very good chemical properties, easy in processing and normal impact.
It also comes in a UV-resistant version (PVC-UV) for outdoor applications

PVDF – Polyvinylidene fluoride
Material for applications with extremely high chemical and temperature resistance requirements. Physiological indifference and resistance to UV.

During the material selection it should be taken into consideration chemical resistance, temperature and concentration of transport medium.

Welding parameters

Different welding parameters are used for different materials. Ventilation ducts and fittings are made according to DIN 4740 and DIN 4741 and Alnor factory standards.

Material	*Hot air temperature [°C]*	*Hot Air Flow [NL/min]*	*Welding time [mm/min]*
PVC-U	350 - 370	45 - 55	250 - 350
PVC-U (PVC White)	350 - 370	45 - 55	250 - 350
PPs	300 - 400	45 - 55	250 - 350
PP-H	300 - 400	45 - 55	250 - 350
PP-EL-s	300 - 400	45 - 55	250 - 350
PVDF	365 - 385	45 - 55	200 - 250

ALNOR® ventilation systems
is a legally protected trademark and technical patent. All rights reserved.

Plastic rectangular ventilation ducts

PVC-QDNF



Description

Rectangular ducts and fittings made of plastics are manufactured from sheet using the welding method. The sheet thickness of which the ducts are made depends on the length of the side and the circumference of the duct. The thicknesses are selected in such a way as to ensure the appropriate rigidity of the duct. On top of this, additional reinforcements are applied. The dimension of the duct is the external dimension. Depending on the type of termination, the system of ducts made of plastic materials is joined by welding (female end), screwing (flanges) or gluing (only PVC).
Minimum duct size: 300 x 280 mm.
Standard duct lengths: 1000, 1500, 3000 mm.
Other lengths available upon request

Standard of performance:
PVC-QDNF - duct with a female end (on one side)
PVC-QDNT - duct with flanges
PVC-QDN - bare duct

Available materials - example of designation

PVC-QDNF	- Polyvinylchloride (PVC)
PPs-QDNF	- hardly flammable polypropylene (PP)
PVCW-QDNF	- polyvinyl chloride - white
PP-QDNF	- polypropylene PP
PPELs-QDNF	- hardly flammable conductive polypropylene PP-EL-s
PE-QDNF	- polyethylene PE
PVDF-QDNF	- PVDF material

Example of designation:
Product code: **PVC-QDNF - 500x300 - l000**

type
a
b
l

Dimensions

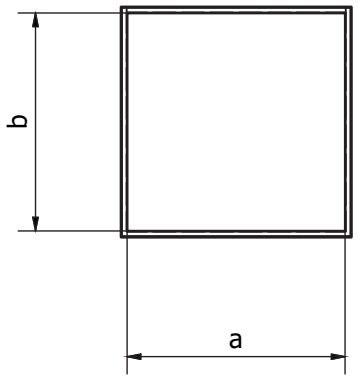

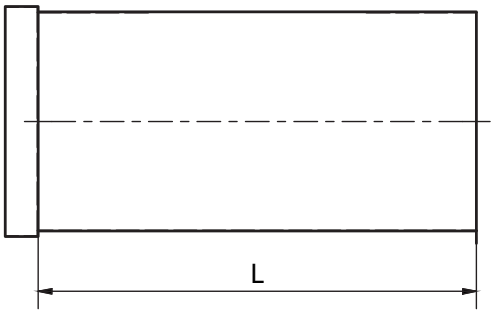

Width or height of the longer side (mm)	*Sheet thickness (mm)*
200	4
250	4
300	4
400	4
500	5
600	5
800	6
1000	8
1200	10

ALNOR® ventilation systems
is a legally protected trademark and technical patent. All rights reserved.

Plastic rectangular ventilation elbow

PVC-QBFF



Dimensions

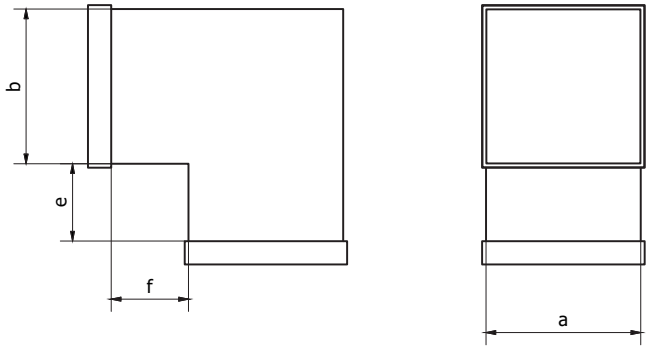

Description

90˚ elbow welded from plastic sheets. Fitting intended for low-pressure systems. All fittings are made with a flange or a female end. The dimension given in the catalogue constitutes the external dimension of the fitting.

Standard of performance: PVC-QBFF - fitting with a female end
PVC-QBFT - fitting with a flange

Available materials - example of designation

PVC-QBFF	- Polyvinylchloride (PVC)
PPs-QBFF	- hardly flammable polypropylene (PP)
PVCW-QBFF	- Polyvinyl chloride - white
PP-QBFF	- polypropylene PP
PPELs-QBFF	- hardly flammable conductive polypropylene PP-EL-s
PE-QBFF	- polyethylene PE
PVDF-QBFF	- PVDF material

Example of designation:
Product code: **PVC-QBFF - 500x300 - 30 - 30**

type
a
b
e
f

ALNOR® ventilation systems
is a legally protected trademark and technical patent. All rights reserved.

Symmetric square-square reducer made of plastics

PVC-QPR6F



Dimensions

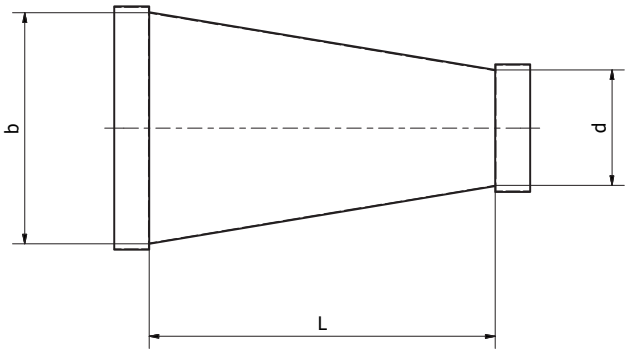

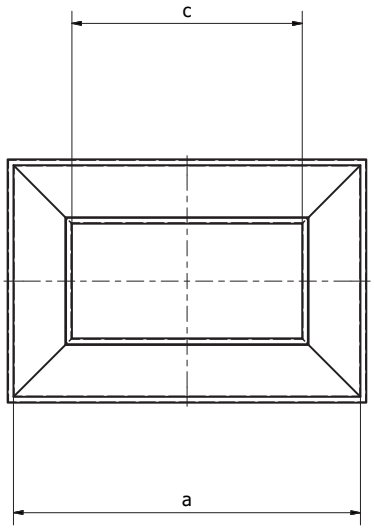

Description

Symmetric reducer for joining two rectangular ducts with different sections. Manufactured from plastic sheets with the wall thickness suitable for the dimensions of the fitting. The dimension given in the catalogue constitutes the external dimension of the fitting.

Standard of performance: PVC-QPR6F - fitting with female
PVC-QPR6T - fitting with flanges

Available materials - example of designation

PVC-QPR6F	- Polyvinylchloride (PVC)
PPs-QPR6F	- hardly flammable polypropylene (PP)
PVCW-QPR6F	- Polyvinyl chloride - white
PP-QPR6F	- polypropylene PP
PPELs-QPR6F	- hardly flammable conductive polypropylene PP-EL-s
PE-QPR6F	- polyethylene PE
PVDF-QPR6F	- PVDF material

Example of designation:
Product code: **PVC-QPR6F - 500x300 - 400x200 - 1000**

type
a
b
c
d
l

ALNOR® ventilation systems
is a legally protected trademark and technical patent. All rights reserved.

Asymmetric square-square reducer made of plastics

PVC-QPR2F



Description

Asymmetric reducer for joining two rectangular ducts with different sections. Except changing the duct dimensions it allows for an offset along the axis. The fitting is manufactured using modern welding tools. The dimension given in the catalogue constitutes the external dimension of the fitting.

Standard of performance: PVC-QPR2F - fitting with female ends
PVC-QPR2T - fitting with flanges

Available materials - example of designation

PVC-QPR2F	- Polyvinylchloride (PVC)
PPs-QPR2F	- hardly flammable polypropylene (PP)
PVCW-QPR2F	- Polyvinyl chloride - white
PP-QPR2F	- polypropylene PP
PPELs-QPR2F	- hardly flammable conductive polypropylene PP-EL-s
PE-QPR2F	- polyethylene PE
PVDF-QPR2F	- PVDF material

Example of designation:
Product code: **PVC-QPR2F-500x300-400x200-50-50-1000**

type
a
b
c
d
e
f
l

Dimensions

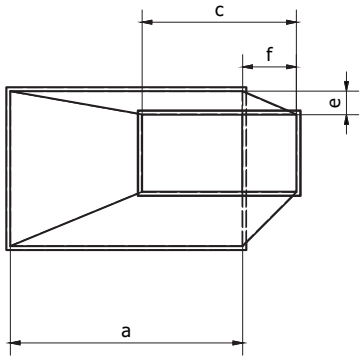

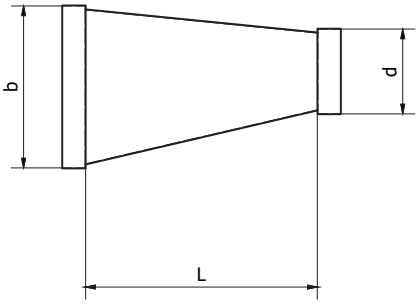

ALNOR® ventilation systems
is a legally protected trademark and technical patent. All rights reserved.

Symmetric square-to-round reducer made of plastics

PVC-PR7F



Dimensions

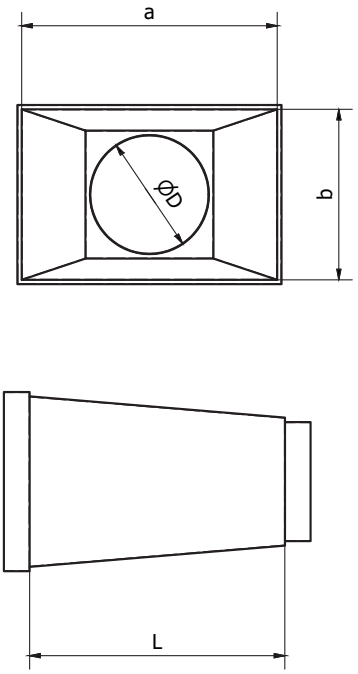

Description

he asymmetric reducer serves the purpose of changing of the system's cross-section from the rectangular cross-section to the round cross-section. Manufactured from plastic sheets with the wall thickness suitable for the dimensions of the fitting. The dimension given in the catalogue constitutes the external dimension of the fitting.

Standard of performance: PVC-PR7F - fittings with female ends
PVC-PR7T - fittings with flanges

Available materials - example of designation

PVC-PR7F	- Polyvinylchloride (PVC)
PPs-PR7F	- hardly flammable polypropylene (PP)
PVCW-PR7F	- Polyvinyl chloride - white
PP-PR7F	- polypropylene PP
PPELs-PR7F	- hardly flammable conductive polypropylene PP-EL-s
PE-PR7F	- polyethylene PE
PVDF-PR7F	- PVDF material

Example of designation:
Product code: **PVC-PR7F - 400x250 - 200 - 1000**

type
a
b
Ø
l

ALNOR® ventilation systems
is a legally protected trademark and technical patent. All rights reserved.

Symmetric rectangular tee made of plastics

PVC-TRF



Dimensions

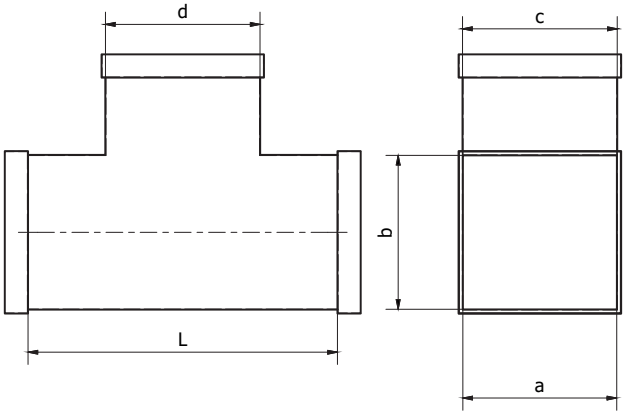

Description

Symmetric tee with the branch-off at 90°, made of welded plastic sheets. Manufactured using high-quality welding equipment. The dimension given in the catalogue constitutes the external dimension of the fitting.

Standard of performance: PVC-QTRF - fittings with female ends
PVC-QTRT - fittings with flanges

Available materials - example of designation

PVC-QTRF	- Polyvinylchloride (PVC)
PPs-QTRF	- hardly flammable polypropylene (PP)
PVCW-QTRF	- Polyvinyl chloride - white
PP-QTRF	- polypropylene PP
PPELs-QTRF	- hardly flammable conductive polypropylene PP-EL-s
PE-QTRF	- polyethylene PE
PVDF-QTRF	- PVDF material

Example of designation:

Product code: **PVC-QTRF - 600x400 - 600x300 - 1000**

type
a
b
c
d
l

ALNOR® ventilation systems
is a legally protected trademark and technical patent. All rights reserved.

Download Wentyle
Download AlnorCAM
Order via B2B platform

TRANS-Quick System

The manufacturer reserves the right to amend product dimensions and technical data given the ongoing product development process.

ALNOR® ventilation systems
is a registered trademark protected by a technical patent. All modification rights reserved.

About the system

TRANS-Quick is a modern clamp-together ducting system intended for industrial dust extraction. Quick assembly and disassembly, using pull rings to connect components - which can be reused and reassembled.Ducts and fittings are manufactured from galvanised steel sheet 0.7 and 0.9 mm in thickness using butt welding method, components are joined with clamps equipped with a gasket.
TRANS-QUICK modular system is used in the variety of of industrial applications which include: woodworking, metallurgical, foundry, food, and paper industry. The system consists of fittings - a diameter of 100 to 600mm and pipes - 500, 1000 and 1500 mm lengths.

Benefits

- Modular system.
- Quick and easy assembly and disassembly with FLKA and FLKA-C connecting clamps.
- System airtightness is accomplished thanks to highly advanced construction of the components.
- Operating temperature ranges from -30˚ to +100 ˚C.
- Aesthetic design - important in the case of exposed ductwork.

Connecting method



TRANS-Quick system ducts and fittings have rolled edge finish at both ends
that serve as a clipping edge for specially designed clamp.



To ensure tight connection snap clamp over rolled edges.



Close the clamp, tighten the screw and secure with a cotter pin.

Tightness

Butt welding ensures the highest airtightness of ventilation pipe. Welding is made longitudinally across pipe's length, it's aesthetic and mechanically resistant.

Features

- Ducts and fittings are made of galvanised steel sheet - 0.7 and 0.9 mm thickness.
- Airtight butt-weld.
- Ducts and fittings are available in diameters from Ø 100 to Ø 600 mm.
- FLKA and FLKA-C connecting clamps with gasket.
- Rolled edge height is about 5-7 mm.
- Pipes are delivered in following lenghts: 1500, 1000 and 500 mm.
- 1D, 1.5D and 2D bends.
- Equal T-pieces, reducing T-pieces and other fittings.
- Fully adjustable with existing ventilation systems.
- No rivets, screws or welding - connecting component using only clamps (pull rings).

Sections

Pipe		*Number of sections*			
D [mm]	*T [mm]*	*L - 500 [mm]*	*L - 1000 [mm]*	*L - 1500 [mm]*	*L - 2000 [mm]*
100	0,7	1	1	1	2
125	0,7	1	1	1	2
150	0,7	1	1	1	2
160	0,7	1	1	1	2
180	0,7	1	1	1	2
200	0,7	1	1	1	2
250	0,7	1	1	1	2
300	0,7	1	1	1	2
315	0,7	1	1	1	2
350	0,7	1	1	1	2
400	0,7	1	1	1	2
500	0,7	1	1	1	2
550	0,7	1	1	1	2
600	0,7	1	1	1	2

How length is indicated in a product code:
code...-0050 as for L=500 mm
code...-0100 as for L=1000 mm
code...-0150 as for L=1500 mm
code...-0200 as for L=2000 mm

is a registered trademark protected by a technical patent. All modification rights reserved.

About the system

Wykres dopuszczalnych podciśnień (kPa) w zależności od średnicy i grubości blachy.

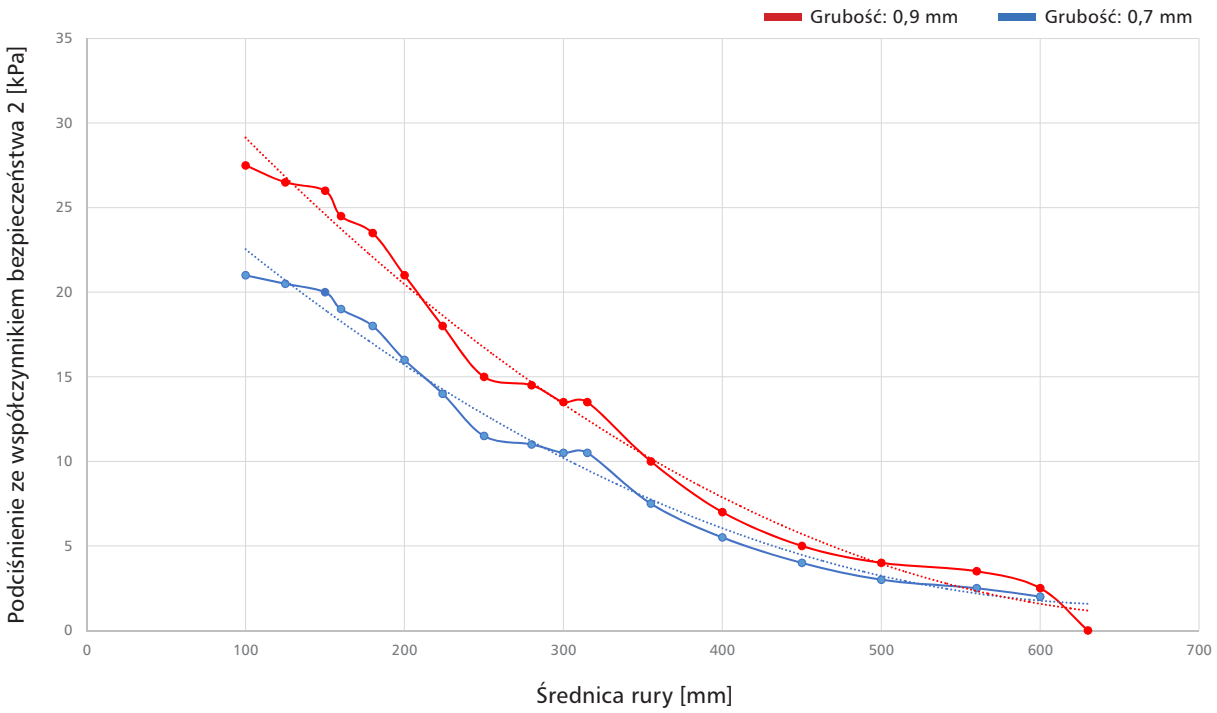

ALNOR® ventilation systems
is a registered trademark protected by a technical patent. All modification rights reserved.

Connecting clamp for clamp-together systems
FLKA



Description

The FLKA clamp is the most important component of TRANS-Quick System ventilation installations. It is used to connect two components ducts or fittings of circular cross-section.
Pipe and fitting have a rolled-up edge at a height about 5-7 mm at 90 degrees angle. The components are clamped together with connecting clamps snapped into place quickly and effectively sealing it centripetally.

The major advantage of clamp-together system is its quick assembly and disassembly without having to displace the installation – 1-3 components can be removed without taking apart the others. Smooth interior, no internal inserts which could block the airflow if covered with sawdust or other particles - fewer bug harbors and snag opportunities.

Designation example
Product Code: **FLKA - aaa**

type
diameter

Dimensions

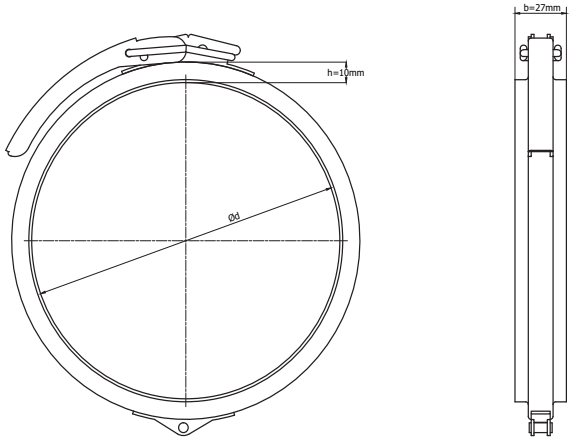

Product code	*Diameter ØD [mm]*
FLKA-100	100
FLKA-125	125
FLKA-160	160
FLKA-200	200
FLKA-250	250
FLKA-315	315

ALNOR® ventilation systems
is a registered trademark protected by a technical patent. All modification rights reserved.

Connecting clamp with a bolt and a pin

FLKA-C



Description

The FLKA clamp is the most important component of TRANS-Quick System. It is used to connect two components - ventilation pipes or fittings of circular cross-section. Pipes and fittings have rolled-up edge at height about 5-7 mm at 90 degrees angle. The components are clamped together with connecting clamps snapped into place quickly and effectively sealing it centripetally.
The major advantage of clamp-together system is its quick assembly and disassembly without having to displace the installation – 1 - 3 components can be removed without taking apart the others. Smooth interior, no internal inserts which could block the airflow if covered with sawdust or other particles - fewer bug harbors and snag opportunities.



Additonally the clamp is equipped with a bolt which needs to be tightened to ensure system airtitghenss.

Note!
If higher airtightness class is required (B class acc. EN 12237:2003), special FLKA-EPDM gasket (sold in 25-meter rolls) is available upon request.

Available materials - designation example
FLKA-C-...- galvanised steel sheet

Designation example
Product Code: **FLKA-C - aaa**

type
diameter

Dimensions

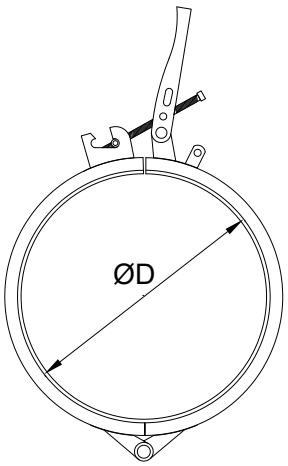

Product code	*Diameter ØD [mm]*
FLKA-C-100	100
FLKA-C-125	125
FLKA-C-150	150
FLKA-C-160	160
FLKA-C-180	180
FLKA-C-200	200
FLKA-C-225	225
FLKA-C-250	250
FLKA-C-300	300
FLKA-C-315	315
FLKA-C-350	350
FLKA-C-400	400
FLKA-C-450	450
FLKA-C-500	500
FLKA-C-550	550
FLKA-C-600	600

Assembly





ALNOR® ventilation systems
is a registered trademark protected by a technical patent. All modification rights reserved.

Clamp to TRANS-Quick system with higher tightness

FLKA-C-D



Description

FLKA-C-D clamp is a special version of FLKA-C clamp. Steel structure is the same – it has clamp with adjusment screw and hinge. However, a special FLKA-EPDM gasket was used in this version. The shape of gasket is wider and it is raised to the edge of the clamp. It allows for increased tightness of the connection. According to the measurement methodology in accordance with PN-EN 12237: 2005, the use of the FLKA-C-D clamp gave the result in class D. It is the highest possible class (the smallest leakage)

Available materials - designation example
FLKA-C-D-...- galvanised steel sheet

Designation example
Product Code: **FLKA-C-D - aaa**

type
diameter

Dimensions

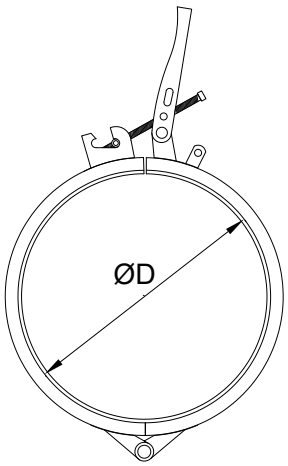

Product code	*Diameter ØD [mm]*
FLKA-C-D-100	100
FLKA-C-D-125	125
FLKA-C-D-150	150
FLKA-C-D-160	160
FLKA-C-D-180	180
FLKA-C-D-200	200
FLKA-C-D-225	225
FLKA-C-D-250	250
FLKA-C-D-300	300
FLKA-C-D-315	315
FLKA-C-D-350	350
FLKA-C-D-400	400
FLKA-C-D-450	450
FLKA-C-D-500	500
FLKA-C-D-550	550
FLKA-C-D-600	600

ALNOR® ventilation systems
is a registered trademark protected by a technical patent. All modification rights reserved.

Welded pipe for dust extraction system

SRGLQT

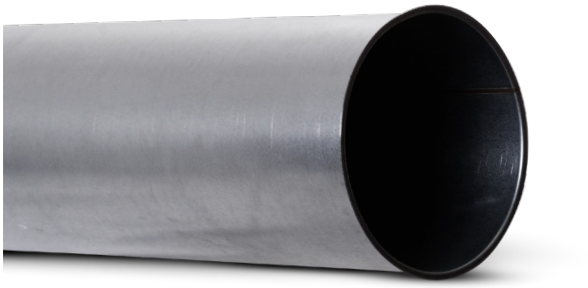

Description

Butt-welded pipe for transporting air and dust. TRANS-Quick system is made of galvanised steel sheet, 0.7 and 0.9 mm in thickness. Depending on the wall thickness there are available various lengths:
0.7 mm thickness: L=500 / 1000 / 1480 mm.
0.9 mm thickness: L=500 / 1000 mm

Available materials - designation example
SRGLQT-200-07-0100 - galvanised steel sheet

Designation example
Product Code: **SRGLQT - aaa - bbb - ccc**

type
diameter
thickness
length

Dimensions

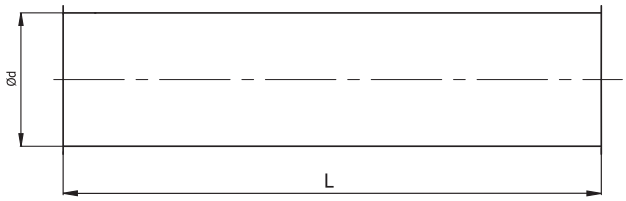

Product Code	*Diameter [mm]*	*Thickness [mm]*	*Length L [mm]*
SRGLQT-100-070-0050	100	0.7	500
SRGLQT-100-070-0100	100	0.7	1000
SRGLQT-100-070-0150	100	0.7	1480
SRGLQT-125-070-0050	125	0.7	500
SRGLQT-125-070-0100	125	0.7	1000
SRGLQT-125-070-0150	125	0.7	1480
SRGLQT-150-070-0050	150	0.7	500
SRGLQT-150-070-0100	150	0.7	1000
SRGLQT-150-070-0150	150	0.7	1480
SRGLQT-160-070-0050	160	0.7	500
SRGLQT-160-070-0100	160	0.7	1000
SRGLQT-160-070-0150	160	0.7	1480
SRGLQT-180-070-0050	180	0.7	500
SRGLQT-180-070-0100	180	0.7	1000
SRGLQT-180-070-0150	180	0.7	1480
SRGLQT-200-070-0150	200	0.7	1480
SRGLQT-225-070-0150	225	0.7	1480
SRGLQT-250-070-0150	250	0.7	1480
SRGLQT-300-070-0150	300	0.7	1480
SRGLQT-315-070-0150	315	0.7	1480
SRGLQT-350-070-0150	350	0.7	1480
SRGLQT-400-070-0150	400	0.7	1480
SRGLQT-450-070-0150	450	0.7	1480
SRGLQT-500-070-0150	500	0.7	1480
SRGLQT-550-070-0150	550	0.7	1480
SRGLQT-600-070-0150	600	0.7	1480

ALNOR® ventilation systems
is a registered trademark protected by a technical patent. All modification rights reserved.

Welded pipe for dust extraction system

SRGLQT

Product Code	Diameter [mm]	Thickness [mm]	Length L [mm]
SRGLQT-100-090-0050	100	0.9	500
SRGLQT-100-090-0100	100	0.9	1000
SRGLQT-125-090-0050	125	0.9	500
SRGLQT-125-090-0100	125	0.9	1000
SRGLQT-150-090-0050	150	0.9	500
SRGLQT-150-090-0100	150	0.9	1000
SRGLQT-160-090-0050	160	0.9	500
SRGLQT-160-090-0100	160	0.9	1000
SRGLQT-180-090-0050	180	0.9	500
SRGLQT-180-090-0100	180	0.9	1000
SRGLQT-200-090-0050	200	0.9	500
SRGLQT-200-090-0100	200	0.9	1000
SRGLQT-200-090-0150	200	0.9	1480
SRGLQT-225-090-0050	225	0.9	500
SRGLQT-225-090-0100	225	0.9	1000
SRGLQT-225-090-0150	225	0.9	1480
SRGLQT-250-090-0050	250	0.9	500
SRGLQT-250-090-0100	250	0.9	1000
SRGLQT-250-090-0150	250	0.9	1480
SRGLQT-300-090-0050	300	0.9	500
SRGLQT-300-090-0100	300	0.9	1000
SRGLQT-300-090-0150	300	0.9	1480
SRGLQT-315-090-0050	315	0.9	500
SRGLQT-315-090-0100	315	0.9	1000
SRGLQT-315-090-0150	315	0.9	1480
SRGLQT-350-090-0050	350	0.9	500
SRGLQT-350-090-0100	350	0.9	1000
SRGLQT-350-090-0150	350	0.9	1480
SRGLQT-400-090-0050	400	0.9	500
SRGLQT-400-090-0100	400	0.9	1000
SRGLQT-400-090-0150	400	0.9	1480
SRGLQT-450-090-0050	450	0.9	500
SRGLQT-450-090-0100	450	0.9	1000
SRGLQT-450-090-0150	450	0.9	1480
SRGLQT-500-090-0050	500	0.9	500
SRGLQT-500-090-0100	500	0.9	1000
SRGLQT-500-090-0150	500	0.9	1480
SRGLQT-550-090-0050	550	0.9	500
SRGLQT-550-090-0100	550	0.9	1000
SRGLQT-550-090-0150	550	0.9	1480
SRGLQT-600-090-0050	600	0.9	500
SRGLQT-600-090-0100	600	0.9	1000
SRGLQT-600-090-0150	600	0.9	1480

ALNOR® ventilation systems
is a registered trademark protected by a technical patent. All modification rights reserved.

Welded pipe for dust extraction system

SRGWQT

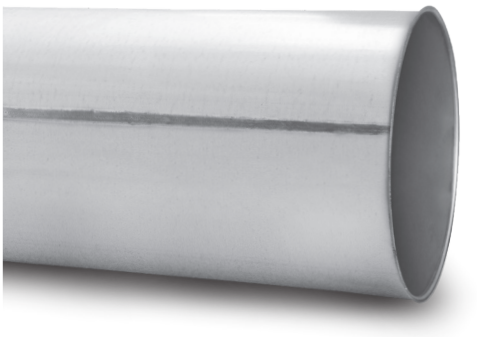

Description

Butt-welded pipe for transporting air and dust. TRANS-Quick system is made of galvanised steel sheet, 0.7 and 0.9 mm in thickness. Depending on the wall thickness there are available various lengths:
0.7 mm thickness: L=500 / 1000 / 1480 mm.
0.9 mm thickness: L=500 / 1000 mm

Available materials - designation example
SRGLQT-200-07-0100 - galvanised steel sheet

Designation example
Product Code: **SRGLQT - aaa - bbb - ccc**

type
diameter
thickness
length

Dimensions

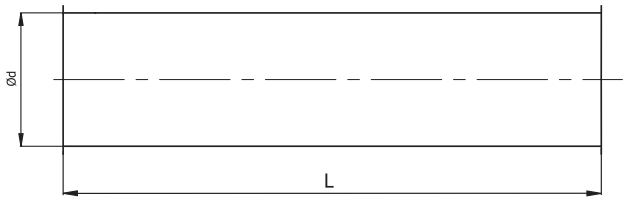

Product Code	*Diameter [mm]*	*Thickness [mm]*	*Length L [mm]*
SRGWQT-100-070-0050	100	0.7	500
SRGWQT-100-070-0100	100	0.7	1000
SRGWQT-125-070-0050	125	0.7	500
SRGWQT-125-070-0100	125	0.7	1000
SRGWQT-150-070-0050	150	0.7	500
SRGWQT-150-070-0100	150	0.7	1000
SRGWQT-160-070-0050	160	0.7	500
SRGWQT-160-070-0100	160	0.7	1000
SRGWQT-180-070-0050	180	0.7	500
SRGWQT-180-070-0100	180	0.7	1000
SRGWQT-200-070-0050	200	0.7	500
SRGWQT-200-070-0100	200	0.7	1000
SRGWQT-225-070-0050	225	0.7	500
SRGWQT-225-070-0100	225	0.7	1000
SRGWQT-250-070-0050	250	0.7	500
SRGWQT-250-070-0100	250	0.7	1000
SRGWQT-300-070-0050	300	0.7	500
SRGWQT-300-070-0100	300	0.7	1000
SRGWQT-315-070-0050	315	0.7	500
SRGWQT-315-070-0100	315	0.7	1000
SRGWQT-350-070-0050	350	0.7	500
SRGWQT-350-070-0100	350	0.7	1000
SRGWQT-400-070-0050	400	0.7	500
SRGWQT-400-070-0100	400	0.7	1000
SRGWQT-450-070-0050	450	0.7	500
SRGWQT-450-070-0100	450	0.7	1000
SRGWQT-500-070-0050	500	0.7	500
SRGWQT-500-070-0100	500	0.7	1000
SRGWQT-550-070-0050	550	0.7	500
SRGWQT-550-070-0100	550	0.7	1000
SRGWQT-600-070-0050	600	0.7	500
SRGWQT-600-070-0100	600	0.7	1000
SRGWQT-630-070-0050	630	0.7	500
SRGWQT-630-070-0100	630	0.7	1000

ALNOR® ventilation systems
is a registered trademark protected by a technical patent. All modification rights reserved.

Welded pipe for dust extraction system

SRGWQT

Product Code	*Diameter [mm]*	*Thickness [mm]*	*Length L [mm]*
SRGWQT-200-090-0050	200	0.9	500
SRGWQT-200-090-0100	200	0.9	1000
SRGWQT-225-090-0050	225	0.9	500
SRGWQT-225-090-0100	225	0.9	1000
SRGWQT-250-090-0050	250	0.9	500
SRGWQT-250-090-0100	250	0.9	1000
SRGWQT-300-090-0050	300	0.9	500
SRGWQT-300-090-0100	300	0.9	1000
SRGWQT-315-090-0050	315	0.9	500
SRGWQT-315-090-0100	315	0.9	1000
SRGWQT-350-090-0050	350	0.9	500
SRGWQT-350-090-0100	350	0.9	1000
SRGWQT-400-090-0050	400	0.9	500
SRGWQT-400-090-0100	400	0.9	1000
SRGWQT-450-090-0050	450	0.9	500
SRGWQT-450-090-0100	450	0.9	1000
SRGWQT-500-090-0050	500	0.9	500
SRGWQT-500-090-0100	500	0.9	1000
SRGWQT-550-090-0050	550	0.9	500
SRGWQT-550-090-0100	550	0.9	1000
SRGWQT-600-090-0050	600	0.9	500
SRGWQT-600-090-0100	600	0.9	1000
SRGWQT-630-090-0050	630	0.9	500
SRGWQT-630-090-0100	630	0.9	1000

ALNOR® ventilation systems
is a registered trademark protected by a technical patent. All modification rights reserved.

Telescopic pipe for dust extraction system

TELQT



Description

TELQT telescopic pipe for TRANS-Quick system is used to provide variable length adjustments in ductwork without additional duct cutting or welding. Adjustment is possible between 500 and 950mm. Outer pipe is equipped with a FLKA-C clamp with a special FLKA-EPDM seal - that ensures high airtightness of the telescopic pipe and low airflow resistance. Telescopic pipe can be made of galvanized steel sheet, 0.7 or 0.9 mm in thickness.

Available materials - designation example
TELQT-200-070- galvanized steel sheet

Designation example
Product Code **TELQT - aaa - bbb - ccc**

type
diameter
thickness
length

Dimensions

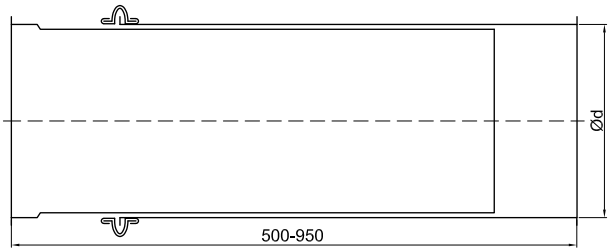

Product Code	Diameter [mm]	Length L [mm]
TELQT-100	100	500 - 950
TELQT-125	125	500 - 950
TELQT-150	150	500 - 950
TELQT-160	160	500 - 950
TELQT-180	180	500 - 950
TELQT-200	200	500 - 950
TELQT-225	225	500 - 950
TELQT-250	250	500 - 950
TELQT-300	300	500 - 950
TELQT-315	315	500 - 950
TELQT-350	350	500 - 950
TELQT-400	400	500 - 950
TELQT-450	450	500 - 950
TELQT-500	500	500 - 950
TELQT-550	550	500 - 950
TELQT-600	600	500 - 950

ALNOR® ventilation systems
is a registered trademark protected by a technical patent. All modification rights reserved.

Segmented ventilation bend for dust extraction system

BSQT



Description

Segmented ventilation elbow is made of galvanised steel sheet, 0.7 and 0.9 mm in thickness.

Standard BSQT bends:
BSQT-...-90-...- bend 90˚, 4 segments
BSQT-...-60-...- bend 60˚, 5 segments
BSQT-...-45-...- bend 45˚, 2 segments
BSQT-...-30-...- bend 30˚, 2 segments

Upon request we can manufacture other bend degrees from 5 to 85˚ with a tolerance of 1-2˚and 7-segment bends (smoother airflow, reduced bend abrasion.

Available materials - designation example
BSQT-200-90-0,7- galvanised steel sheet

Designation example
Product Code: **BSQT - aaa - bbb - ccc**

type
diameter
degree
thickness

Dimensions

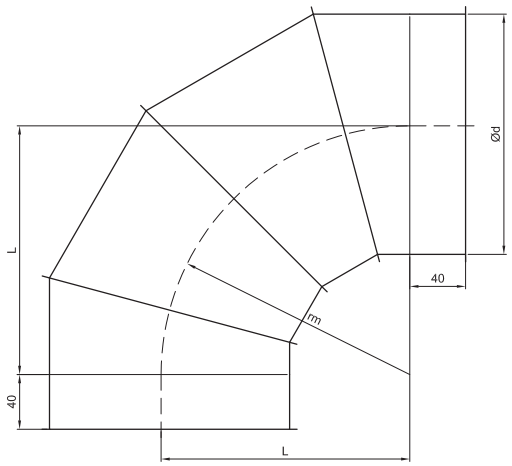

Diameter [mm]	L [mm]
100	100
125	125
150	150
160	160
180	180
200	200
225	225
250	250
300	300
315	315
350	350
400	400
450	450
500	500
550	550
600	600

ALNOR® ventilation systems
is a registered trademark protected by a technical patent. All modification rights reserved.

Segmented ventilation 1.5D bend for dust collection system

BSDQT



Description

Segmented ventilation elbow with smooth radius r=1.5d. Smooth radius reduces resistance in ventilation system. Segmented elbow is made of galvanised steel sheet, 0.7 or 0.9 mm in thickness.

Standard BSDQT bends:
BSDQT-...-90-...- bend 90˚, 5 segments
BSDQT-...-60-...- bend 60˚, 4 segments
BSDQT-...-45-...- bend 45˚, 3 segments
BSDQT-...-30-...- bend 30˚, 3 segments

Upon request we can manufacture other bend degrees from 5 to 85˚ with a tolerance of 1-2˚and 7-segment bends (smoother airflow, reduced bend abrasion.

Available materials - designation example
BSDQT-315-90-0,7 - galvanised steel sheet

Designation example
Product Code: **BSDQT - aaa - bbb - ccc**

type
diameter
degree
thickness

Dimensions

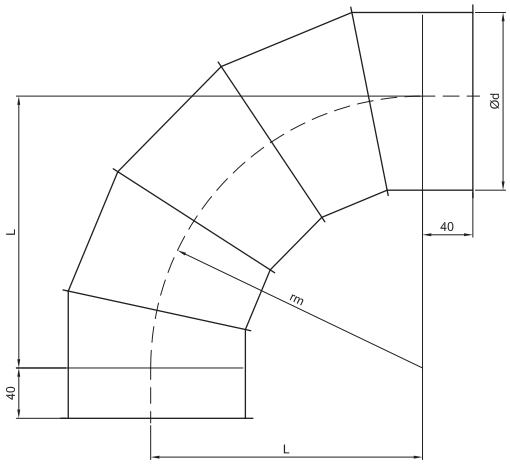

Diameter [mm]	*L [mm]*
100	150
125	187,5
150	225
160	240
180	300
200	270
225	335
250	375
300	450
315	470
350	530
400	600
450	675
500	750
550	840
600	900

ALNOR® ventilation systems
is a registered trademark protected by a technical patent. All modification rights reserved.

Segmented ventilation 2D bend for dust collection system

BSD2QT



Description

Segmented ventilation elbow with smooth radius r=2d. Smooth radius reduces resistance in ventilation system. Segmented elbow is made of galvanised steel sheet, 0.7 or 0.9 mm in thickness.

Standard BSD2QT bends:
BSD2QT-...-90-...- bend 90˚
BSD2QT-...-60-...- bend 60˚
BSD2QT-...-45-...- bend 45˚
BSD2QT-...-30-...- bend 30˚

Upon request we can manufacture other bend degrees from 5 to 85˚ with a tolerance of 1-2˚.

Available materials - designation example
BSD2QT-200-90-0,7 - galvanised steel sheet

Designation example
Product Code: **BSD2QT - aaa - bbb - ccc**

type
diameter
dgree
thickness

Dimensions

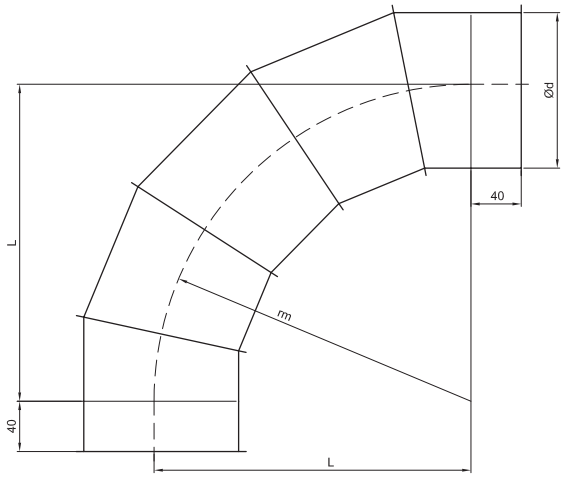

Diameter [mm]	L [mm]
100	200
125	250
150	300
160	320
180	360
200	400
225	450
250	500
300	600
315	630
350	700
400	800
450	900
500	1000
550	1100
600	1200

ALNOR® ventilation systems
is a registered trademark protected by a technical patent. All modification rights reserved.

Reducer for modular TRANS-Quick System

RSCLQT



Description

Reducer - diffusor / confusor reduces the diameter of the ventilation duct to increase or decrease the pressure in the ventilation system. Reducer is made of galvanized steel sheet, 0.7 or 0.9 mm thickness.



Available materials - designation example
RSCLQT-315-250-070 - galvanised steel sheet

Designation example

Product Code: **RSCLQT - aaa - bbb - ccc**

type
diameter Ød$_1$
diameter Ød$_2$
thickness

Dimensions

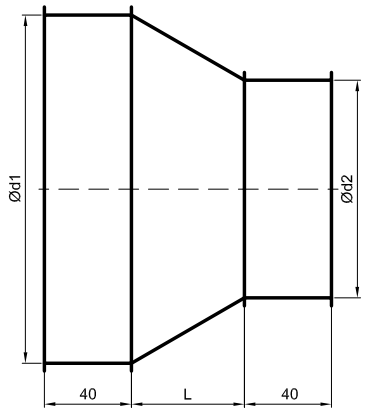

Diameter Ød$_1$ [mm]	Diameter Ød$_2$ [mm]	L [mm]
125	100	52
150	100	80
150	125	51
160	100	91
160	125	63
160	150	35
180	100	113
180	125	86
180	160	47
200	100	135
200	125	107
200	180	47
225	125	134
225	180	73
225	200	50
250	125	163
250	160	124
250	200	80

ALNOR® ventilation systems
is a registered trademark protected by a technical patent. All modification rights reserved.

Reducer for modular TRANS-Quick System

RSCLQT

Dimensions

Diameter Ød$_1$ [mm]	*Diameter Ød$_2$ [mm]*	*L [mm]*
300	150	191
300	200	135
300	250	80
315	160	196
315	250	96
315	300	41
350	180	219
350	250	141
350	315	69
400	200	226
400	250	175
400	315	110
450	315	160
450	400	79
500	350	170
500	400	129
500	450	79
550	400	211
550	500	98
600	450	219
600	500	164
600	550	96

ALNOR® ventilation systems
is a registered trademark protected by a technical patent. All modification rights reserved.

Straight ventilation Tee

TPCQT



Description

Ventilation tee connects with other TRANS-Quick components to transport contaminated air, sawdust, or to simply combine or split air flows. T-piece has a straight 90° branch and the branch size is the same as the header pipe or branch less than that of header size.

Available materials - designation example
TPCQT-160-125-0,7 - galvanised steel sheet

Designation example:
Product Code: **TPCQT - aaa - bbb - ccc**

type
diameter Ød$_1$
diameter Ød$_2$
thickness

Dimensions

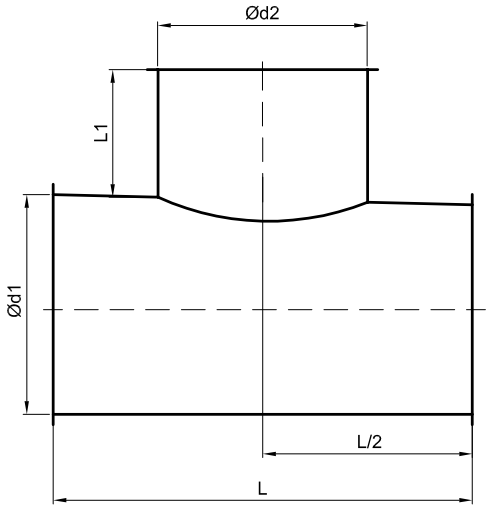

Średnica Ød$_1$ [mm]	*Średnica Ød$_2$ [mm]*	*L [mm]*	*L$_1$ [mm]*
100	100	180	40
125	100	180	40
125	125	210	40
150	100	180	40
150	125	210	40
150	150	230	40
160	100	180	40
160	125	210	40
160	150	230	40
160	160	240	40
180	100	180	40
180	125	210	40
180	150	230	40
180	160	240	40
180	160	240	40
200	100	180	40
200	125	210	40
200	150	230	40
200	160	240	40
200	180	260	40
200	200	320	60
225	125	210	40
225	150	230	40
225	160	240	40
225	180	260	40
225	200	320	60
225	225	350	60

ALNOR® ventilation systems
is a registered trademark protected by a technical patent. All modification rights reserved.

Straight ventilation Tee
TPCQT

Dimensions

Średnica Ød$_1$ [mm]	*Średnica Ød$_2$ [mm]*	*L [mm]*	*L$_1$ [mm]*
250	125	210	40
250	150	230	40
250	160	240	40
250	180	260	40
250	200	320	60
250	225	350	60
250	250	370	60
300	150	230	40
300	160	240	40
300	180	260	40
300	200	320	60
300	225	350	60
300	250	370	60
300	300	460	80
315	160	240	40
315	180	260	40
315	200	320	60
315	225	350	60
315	250	370	60
315	300	460	80
315	315	480	80
350	180	260	40
350	200	320	60
350	250	370	60
350	300	460	80
350	315	480	80
350	350	550	100
400	200	320	60
400	225	350	60
400	250	370	60
400	300	460	80
400	315	480	80
400	350	550	100
400	400	600	100
450	315	480	80
450	350	550	100
450	400	600	100
450	450	690	120
500	350	550	100
500	400	600	100
500	450	690	120
500	500	740	120

Średnica Ød$_1$ [mm]	*Średnica Ød$_2$ [mm]*	*L [mm]*	*L$_1$ [mm]*
550	400	600	100
550	450	690	120
550	500	740	120
550	550	830	140
600	450	690	120
600	500	740	120
600	550	830	140
600	600	880	140

ALNOR® ventilation systems
is a registered trademark protected by a technical patent. All modification rights reserved.

Reducing Tee

TPRQT



Description

Ventilation tee connects with other TRANS-Quick components to transport contaminated air, sawdust, or to simply combine or split airflows. T-piece has straight 90° branch and the branch size is the same as the header pipe or less than that of header size. The tee has reducing 90° branch off (smaller than the main run).

Available materials - designation example
TPRQT-160-120-100-070 - galvanised steel sheet

Designation example
Product code: **TPRQT - aaa - bbb - ccc - ddd**

type
diameter Ød$_1$
diameter Ød$_2$
diameter Ød$_3$
thickness

Dimensions

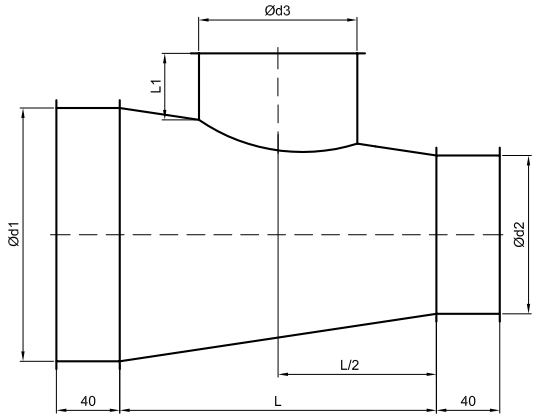

Diameter Ød$_1$ [mm]	Diameter Ød$_2$ [mm]	Diameter Ød$_3$ [mm]	L [mm]	L$_1$ [mm]
125	100	100	200	60
150	100	100	200	60
150	125	100	200	60
150	125	125	250	60
160	100	100	200	60
160	125	100	200	60
160	125	125	250	60
160	150	100	200	60
160	150	125	250	60
160	150	150	300	60
180	100	100	200	60
180	125	100	200	60
180	125	125	250	60
180	150	100	200	60
180	150	125	250	60
180	150	150	300	60
180	160	100	200	60
180	160	125	250	60
180	160	150	300	60
180	160	160	350	60
200	100	100	200	60
200	125	100	200	60
200	125	125	250	60
200	150	100	200	60
200	150	125	250	60
200	150	150	300	60
200	160	100	200	60
200	160	125	250	60
200	160	150	300	60
200	160	160	350	60
200	180	100	200	60
200	180	125	250	60
200	180	150	300	60
200	180	160	350	60
200	180	180	350	60

ALNOR® ventilation systems
is a registered trademark protected by a technical patent. All modification rights reserved.

Reducing Tee

TPRQT

Dimensions

Diameter Ød$_1$ [mm]	Diameter Ød$_2$ [mm]	Diameter Ød$_3$ [mm]	L [mm]	L$_1$ [mm]
225	125	100	200	60
225	125	125	250	60
225	150	100	200	60
225	150	125	250	60
225	150	150	300	60
225	160	100	200	60
225	160	125	250	60
225	160	150	300	60
225	160	160	350	60
225	180	100	200	60
225	180	125	250	60
225	180	150	300	60
225	180	160	350	60
225	180	180	350	60
225	200	100	200	60
225	200	125	250	60
225	200	150	300	60
225	200	160	350	60
225	200	180	350	60
225	200	200	400	80
250	125	100	200	60
250	125	125	250	60
250	150	100	200	60
250	150	125	250	60
250	150	150	300	60
250	160	100	200	60
250	160	125	250	60
250	160	150	300	60
250	160	160	350	60
250	180	100	200	60
250	180	125	250	60
250	180	150	300	60
250	180	160	350	60
250	180	180	350	60
250	200	100	200	60
250	200	125	250	60
250	200	150	300	60
250	200	160	350	60
250	200	180	350	60
250	200	200	400	80
250	225	100	200	60
250	225	125	250	60
250	225	150	300	60
250	225	160	350	60
250	225	180	350	60
250	225	225	400	80

Diameter Ød$_1$ [mm]	Diameter Ød$_2$ [mm]	Diameter Ød$_3$ [mm]	L [mm]	L$_1$ [mm]
300	150	100	200	60
300	150	125	250	60
300	150	150	300	60
300	160	100	200	60
300	160	125	250	60
300	160	150	300	60
300	160	160	350	60
300	180	100	200	60
300	180	125	250	60
300	180	150	300	60
300	180	160	350	60
300	180	180	350	60
300	200	100	200	60
300	200	125	250	60
300	200	150	300	60
300	200	160	350	60
300	200	180	350	60
300	200	200	400	80
300	225	100	200	60
300	225	125	250	60
300	225	150	300	60
300	225	160	350	60
300	225	180	350	60
300	225	200	400	80
300	225	225	400	80
300	250	125	250	60
300	250	150	300	60
300	250	160	350	60
300	250	180	350	60
300	250	200	400	80
300	250	250	450	80

ALNOR® ventilation systems
is a registered trademark protected by a technical patent. All modification rights reserved.

Reducing Tee

TPRQT

Dimensions

Diameter Ød$_1$ [mm]	Diameter Ød$_2$ [mm]	Diameter Ød$_3$ [mm]	L [mm]	L$_1$ [mm]
315	160	100	200	60
315	160	125	250	60
315	160	150	300	60
315	160	160	350	60
315	180	100	200	60
315	180	125	250	60
315	180	150	300	60
315	180	160	350	60
315	180	180	350	60
315	200	100	200	60
315	200	125	250	60
315	200	150	300	60
315	200	160	350	60
315	200	180	350	60
315	200	200	400	80
315	225	100	200	60
315	225	125	250	60
315	225	160	350	60
315	225	180	350	60
315	225	200	400	80
315	225	225	400	80
315	250	125	250	60
315	250	150	300	60
315	250	160	350	60
315	250	180	350	60
315	250	200	400	80
315	250	250	450	80
315	300	150	300	60
315	300	160	350	60
315	300	180	350	60
315	300	200	400	80
315	300	225	400	80
315	300	250	450	80
315	300	300	500	80

Diameter Ød$_1$ [mm]	Diameter Ød$_2$ [mm]	Diameter Ød$_3$ [mm]	L [mm]	L$_1$ [mm]
350	180	100	200	60
350	180	125	250	60
350	180	150	300	60
350	180	160	350	60
350	180	180	350	60
350	200	100	200	60
350	200	125	250	60
350	200	150	300	60
350	200	160	350	60
350	200	180	350	60
350	200	200	400	80
350	250	125	250	60
350	250	150	300	60
350	250	160	350	60
350	250	180	350	60
350	250	200	400	80
350	250	225	400	80
350	250	250	450	80
350	300	150	300	60
350	300	160	350	60
350	300	180	350	60
350	300	200	400	80
350	300	225	400	80
350	300	250	450	80
350	300	300	500	80
350	315	125	250	60
350	315	150	300	60
350	315	160	350	60
350	315	180	350	60
350	315	200	400	80
350	315	225	450	80
350	315	250	450	80
350	315	300	500	80
350	315	315	500	80

ALNOR® ventilation systems
is a registered trademark protected by a technical patent. All modification rights reserved.

Reducing Tee

TPRQT

Dimensions

Diameter $Ød_1$ [mm]	Diameter $Ød_2$ [mm]	Diameter $Ød_3$ [mm]	L [mm]	L_1 [mm]
400	200	100	200	60
400	200	125	250	60
400	200	150	300	60
400	200	160	350	60
400	200	180	350	60
400	200	200	400	80
400	225	100	200	60
400	225	125	250	60
400	225	160	350	60
400	225	180	350	60
400	225	200	400	80
400	225	225	400	80
400	250	125	250	60
400	250	150	300	60
400	250	160	350	60
400	250	180	350	60
400	250	200	400	80
400	250	225	400	80
400	250	250	450	80
400	300	150	300	60
400	300	160	350	60
400	300	180	350	60
400	300	200	400	80
400	300	225	400	80
400	300	250	450	80
400	300	300	500	80
400	315	160	350	60
400	315	180	350	60
400	315	200	400	80
400	315	225	400	80
400	315	250	450	80
400	315	300	500	80
400	315	315	500	80
400	350	200	400	80
400	350	250	450	80
400	350	300	500	80
400	350	315	500	80
400	350	350	650	100

Diameter $Ød_1$ [mm]	Diameter $Ød_2$ [mm]	Diameter $Ød_3$ [mm]	L [mm]	L_1 [mm]
450	315	250	450	80
450	315	300	500	80
450	315	315	500	80
450	350	300	500	80
450	350	315	500	80
450	350	350	650	100
450	400	315	500	80
450	400	350	500	100
450	400	400	700	100
500	350	300	500	80
500	350	315	500	80
500	350	350	650	100
500	400	315	500	80
500	400	350	650	100
500	400	400	700	100
500	450	350	650	100
500	450	400	700	100
500	450	450	800	120
550	400	315	500	80
550	400	350	650	100
550	400	400	700	100
550	450	350	650	100
550	450	400	700	100
550	450	450	800	120
550	510	400	700	100
550	500	450	800	120
550	500	500	900	120
600	450	350	650	100
600	450	400	700	100
600	450	450	800	120
600	500	400	700	100
600	500	450	800	120
600	500	500	900	120
600	550	450	800	120
600	550	500	900	120
600	550	550	1000	140

ALNOR® ventilation systems
is a registered trademark protected by a technical patent. All modification rights reserved.

Straight tee

TSVQT



Description

Ventilation straight tee with a branch at an angle of 45° is a TRANS-Quick system component, is connected with other fittings using FLKA and FLKA-C pull rings. Being a part of clamp together system, it is used to transport contaminated air, sawdust - dust collection systems or to simply combine or split airflows.
The straight tee can be supplied with a branch at an angle of: 30˚-85˚.

Available materials - designation example
TSVQT-45-160-125-070 - galvanised steel sheet

Designation example
Product code: **TSVQT - aaa - bbb - ccc - ddd**

type
degree
diameter Ød$_1$
diameter Ød$_2$
thickness

Dimensions

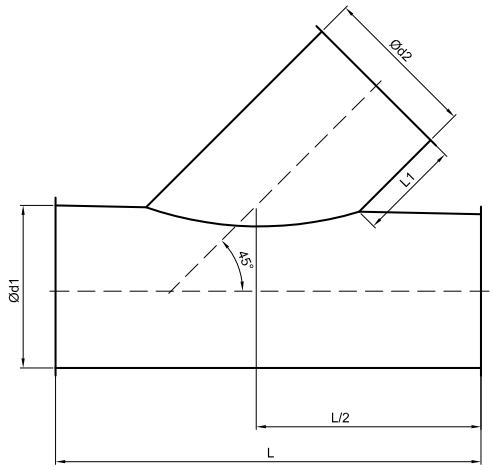

Diameter Ød$_1$ [mm]	Diameter Ød$_2$ [mm]	L [mm]	L$_1$ [mm]
100	100	240	40
125	100	240	40
125	125	280	40
150	100	240	40
150	125	280	40
150	150	320	40
160	100	240	40
160	125	280	40
160	150	320	40
160	160	320	40
180	100	240	40
180	125	280	40
180	150	320	40
180	160	320	40
200	100	240	40
200	125	280	40
200	150	320	40
200	160	320	40
200	180	360	40
200	200	400	60
225	125	280	60
225	150	320	40
225	160	320	40
225	180	360	40
225	200	400	60
225	225	440	60
250	125	280	40
250	150	320	40
250	160	320	40
250	180	360	40
250	200	400	60
250	225	440	60
250	250	480	60

ALNOR® ventilation systems
is a registered trademark protected by a technical patent. All modification rights reserved.

Straight tee

TSVQT

Dimensions

Diameter $Ød_1$ [mm]	Diameter $Ød_2$ [mm]	L [mm]	L_1 [mm]
300	150	320	40
300	160	320	40
300	180	360	40
300	200	400	60
300	225	440	60
300	250	480	60
300	300	580	80
315	160	320	40
315	180	360	40
315	200	400	60
315	225	440	60
315	250	480	60
315	300	580	80
315	315	600	80
350	180	360	40
350	200	400	60
350	250	480	60
350	300	580	80
350	315	600	80
350	350	680	100
400	200	400	60
400	225	440	60
400	250	480	60
400	300	580	80
400	315	600	80
400	350	680	100
400	400	740	100
450	315	600	80
450	350	680	100
450	400	740	100
450	450	850	120
500	350	680	100
500	400	740	100
500	450	850	120
500	500	900	120
550	400	740	100
550	450	850	120
550	500	900	120
550	550	1000	140
600	450	850	120
600	500	900	120
600	550	1000	140
600	600	1100	140

ALNOR® ventilation systems
is a registered trademark protected by a technical patent. All modification rights reserved.

Reducing tee

TVRQT-45



Description

Ventilation tee connects with other TRANS-Quick components to transport contaminated air, sawdust, or to simply combine or split airflows. The tee has a reducing 45° branch off.

Wall thickness: 0.7 or 0.9 mm.
45° branch.

Available materials - designation example
TVRQT-45-160-125-100-070 - galvanised steel sheet

Designation example
Product Code: **TVRQT-45 - aaa - bbb - ccc - ddd**

type
diameter Ød$_1$
diameter Ød$_2$
diameter Ød$_3$
thickness

Dimensions

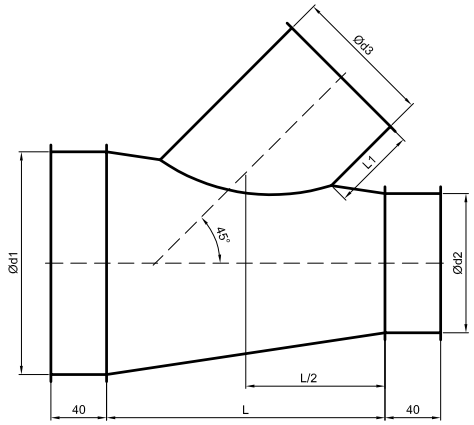

Diameter Ød$_1$ [mm]	Diameter Ød$_2$ [mm]	Diameter Ød$_3$ [mm]	L [mm]	L$_1$ [mm]
125	100	100	180	40
150	100	100	180	40
150	125	100	180	40
150	125	125	220	40
160	100	100	180	40
160	125	100	180	40
160	125	125	220	40
160	150	100	180	40
160	150	125	220	40
160	150	150	250	40
180	100	100	180	40
180	125	100	180	40
180	125	125	220	40
180	150	100	180	40
180	150	125	220	40
180	150	150	250	40
180	160	100	180	40
180	160	125	220	40
180	160	150	250	40
180	160	160	270	40
200	100	100	180	40
200	125	100	180	40
200	125	125	220	40
200	150	100	180	40
200	150	125	220	40
200	150	150	250	40
200	160	100	180	40
200	160	125	220	40
200	160	150	250	40
200	160	160	270	40
200	180	100	180	40
200	180	125	220	40
200	180	150	250	40
200	180	160	270	40
200	180	180	300	40

ALNOR® ventilation systems
is a registered trademark protected by a technical patent. All modification rights reserved.

Reducing tee

TVRQT-45

Dimensions

Diameter Ød$_1$ [mm]	Diameter Ød$_2$ [mm]	Diameter Ød$_3$ [mm]	L [mm]	L$_1$ [mm]
225	125	100	180	40
225	125	125	220	40
225	150	100	180	40
225	150	125	220	40
225	150	150	250	40
225	160	100	180	40
225	160	125	220	40
225	160	150	250	40
225	160	160	270	40
225	180	100	180	40
225	180	125	220	40
225	180	150	250	40
225	180	160	270	40
225	180	180	300	40
225	200	100	180	40
225	200	125	220	40
225	200	150	250	40
225	200	160	270	40
225	200	180	300	40
225	200	200	350	60
250	125	100	180	40
250	125	125	220	40
250	150	100	180	40
250	150	125	220	40
250	150	150	250	40
250	160	100	180	40
250	160	125	220	40
250	160	150	250	40
250	160	160	270	40
250	180	100	180	40
250	180	125	220	40
250	180	150	250	40
250	180	160	270	40
250	180	180	300	40
250	200	100	180	40
250	200	125	220	40
250	200	150	250	40
250	200	160	270	40
250	200	180	300	40
250	200	200	350	60
250	225	100	180	40
250	225	125	220	40
250	225	150	250	40
250	225	160	270	40
250	225	180	300	40
250	225	225	400	60

Diameter Ød$_1$ [mm]	Diameter Ød$_2$ [mm]	Diameter Ød$_3$ [mm]	L [mm]	L$_1$ [mm]
300	150	100	180	40
300	150	125	220	40
300	150	150	250	40
300	160	100	180	40
300	160	125	220	40
300	160	150	250	40
300	160	160	270	40
300	180	100	180	40
300	180	125	220	40
300	180	150	250	40
300	180	160	270	40
300	180	180	300	40
300	200	100	180	40
300	200	125	220	40
300	200	150	250	40
300	200	160	270	40
300	200	180	300	40
300	200	200	350	60
300	225	100	180	40
300	225	125	220	40
300	225	150	250	40
300	225	160	270	40
300	225	180	300	40
300	225	200	350	60
300	225	225	400	60
300	250	125	220	40
300	250	150	250	40
300	250	160	270	40
300	250	180	300	40
300	250	200	350	60
300	250	250	450	80

ALNOR® ventilation systems
is a registered trademark protected by a technical patent. All modification rights reserved.

Reducing tee

TVRQT-45

Dimensions

Diameter Ød$_1$ [mm]	Diameter Ød$_2$ [mm]	Diameter Ød$_3$ [mm]	L [mm]	L$_1$ [mm]
315	160	100	180	40
315	160	125	220	40
315	160	150	250	40
315	160	160	270	40
315	180	100	180	40
315	180	125	220	40
315	180	150	250	40
315	180	160	270	40
315	180	180	300	40
315	200	100	180	40
315	200	125	220	40
315	200	150	250	40
315	200	160	270	40
315	200	180	300	40
315	200	200	350	60
315	225	100	180	40
315	225	125	220	40
315	225	160	270	40
315	225	180	300	40
315	225	200	350	60
315	225	225	400	60
315	250	125	220	40
315	250	150	250	40
315	250	160	270	40
315	250	180	300	40
315	250	200	350	60
315	250	250	450	80
315	300	150	250	40
315	300	160	270	40
315	300	180	300	40
315	300	200	350	60
315	300	225	400	60
315	300	250	450	80
315	300	300	450	80

Diameter Ød$_1$ [mm]	Diameter Ød$_2$ [mm]	Diameter Ød$_3$ [mm]	L [mm]	L$_1$ [mm]
350	180	100	180	40
350	180	125	220	40
350	180	150	250	40
350	180	160	270	40
350	180	180	300	40
350	200	100	180	40
350	200	125	220	40
350	200	150	250	40
350	200	160	270	40
350	200	180	300	40
350	200	200	350	60
350	250	125	220	40
350	250	150	250	40
350	250	160	270	40
350	250	180	300	40
350	250	200	350	60
350	250	225	400	60
350	250	250	450	80
350	300	150	250	40
350	300	160	270	40
350	300	180	300	40
350	300	200	350	60
350	300	225	400	60
350	300	250	450	80
350	300	300	450	80
350	315	125	220	40
350	315	150	250	40
350	315	160	270	40
350	315	180	300	40
350	315	200	350	60
350	315	225	400	60
350	315	250	450	80
350	315	300	450	80
350	315	315	500	80

ALNOR® ventilation systems
is a registered trademark protected by a technical patent. All modification rights reserved.

Reducing tee

TVRQT-45

Dimensions

Diameter Ød$_1$ [mm]	Diameter Ød$_2$ [mm]	Diameter Ød$_3$ [mm]	L [mm]	L$_1$ [mm]
400	200	100	180	40
400	200	125	220	40
400	200	150	250	40
400	200	160	270	40
400	200	180	300	40
400	200	200	350	60
400	225	100	180	40
400	225	125	220	40
400	225	160	270	40
400	225	180	300	40
400	225	200	350	60
400	225	225	400	60
400	250	125	220	40
400	250	150	250	40
400	250	160	270	40
400	250	180	300	40
400	250	200	350	60
400	250	225	400	60
400	250	250	450	80
400	300	150	250	40
400	300	160	270	40
400	300	180	300	40
400	300	200	350	60
400	300	225	400	60
400	300	250	450	80
400	300	300	450	80
400	315	160	270	40
400	315	180	300	40
400	315	200	350	60
400	315	225	400	60
400	315	250	450	80
400	315	300	450	80
400	315	315	500	80
400	350	200	350	60
400	350	250	450	80
400	350	300	450	80
400	350	315	500	80
400	350	350	500	100

Diameter Ød$_1$ [mm]	Diameter Ød$_2$ [mm]	Diameter Ød$_3$ [mm]	L [mm]	L$_1$ [mm]
450	315	250	450	80
450	315	300	450	80
450	315	315	500	80
450	350	300	450	80
450	350	315	500	80
450	350	350	500	100
450	400	315	500	80
450	400	350	500	100
450	400	400	550	100
500	350	300	450	80
500	350	315	500	80
500	350	350	500	100
500	400	315	500	80
500	400	350	500	100
500	400	400	550	100
500	450	350	500	100
500	450	400	550	100
500	450	450	600	120
550	400	315	500	80
550	400	350	500	100
550	400	400	550	100
550	450	350	500	100
550	450	400	550	100
550	450	450	600	120
550	510	400	550	100
550	500	450	600	120
550	500	500	650	120
600	450	350	500	100
600	450	400	550	100
600	450	450	600	120
600	500	400	550	100
600	500	450	600	120
600	500	500	650	120
600	550	450	600	120
600	550	500	650	120
600	550	550	700	140

ALNOR® ventilation systems
is a registered trademark protected by a technical patent. All modification rights reserved.

Y Pieces for dust extraction systems

YSVQT-45



Description

Ventilation Y piece connects with other TRANS-Quick components to transport contaminated air, sawdust - dust collection systems or to simply combine or split airflows.

Wall thickness: 0.7 or 0.9 mm.

Available materials - designation example
YSVQT-45-160-125-070 - galvanised steel sheet

Designation example
Product Code: **YSVQT-45 - aaa - bbb - ccc - ddd**

type
degree
diameter $Ød_1$
$Ød_3$ / $Ød_4$
thickness

Dimensions

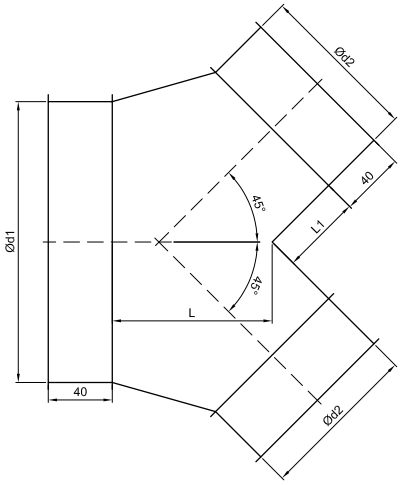

Diameter $Ød_1$ [mm]	Diameter $Ød_3$ / $Ød_4$ [mm]	L [mm]	L_1 [mm]
100	100	100	100
125	100	100	100
125	125	125	100
150	100	100	100
150	150	150	100
160	100	100	100
160	140	140	100
160	160	160	100
180	100	100	100
180	180	180	100
200	100	100	150
200	200	200	100
225	100	100	150
225	225	225	100
250	100	100	150
250	250	250	100
300	100	100	150
300	300	300	100
315	125	125	150
315	315	315	100
350	125	125	150
350	350	350	100
400	200	200	150
400	400	400	100
450	250	250	100
450	450	450	100
500	300	300	100
500	500	500	100
550	350	350	100
550	550	550	100
600	400	400	100
600	600	600	100
630	450	450	100
630	630	630	100

ALNOR® ventilation systems
is a registered trademark protected by a technical patent. All modification rights reserved.

Adapter for clamp-together TRANS-Quick & Spiral® system

NSLQT / NSQT



Description

The adapter is used for joining TRANS-Quick ducts with Spiral® System circular ducts. The adapter has a rolled-up lip on the on end, on the other male connection with a seal.

Available materials - designation example
NSLQT-160-090 - galvanised steel sheet

Designation example
Product code: **NSLQT - aaa - bbb**

type
diameter Ød
thickness

Dimensions

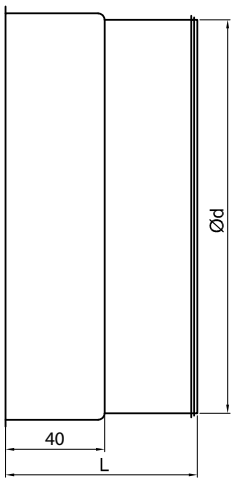

Diameter Ød [mm]	*L [mm]*
100	76
125	76
150	76
160	76
180	76
200	76
225	76
250	76
300	76
315	76
350	95
400	95
450	115
500	115
550	115
600	115

ALNOR® ventilation systems
is a registered trademark protected by a technical patent. All modification rights reserved.

Adapter for clamp-together TRANS-Quick & Spiral® system

MSFQT



Description

Adapter is used for joining TRANS-Quick ducts with Spiral® System fittings. The adapter has a rolled-up lip at the one end, at the other female connection.

Available materials - designation example
MSFQT-160-070 - galvanised steel sheet

Designation example
Product Code: **MSFQT - aaa - bbb**

type
diameter Ød
thickness

Dimensions

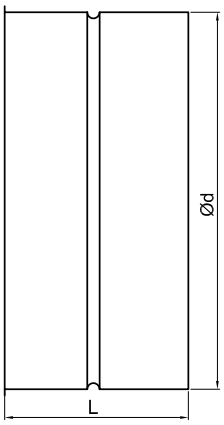

Diameter Ød [mm]	*L [mm]*
100	76
125	76
150	76
160	76
180	76
200	76
225	76
250	76
300	76
315	76
350	95
400	95
450	115
500	115
550	115
600	115

ALNOR® ventilation systems
is a registered trademark protected by a technical patent. All modification rights reserved.

Adapter for clamp-together TRANS-Quick & rectangular system

ILSQT



Description

The connector is used to join TRANS-Quick installations to rectangular ventilation ducts.
Wall thickness: 0.7 or 0.9 mm.

Available materials - designation example
ILSQT-160-070 - galvanised steel sheet

Designation example
Product code: **ILSQT - aaa - bbb**

type
diameter Ød$_1$
thickness

Dimensions

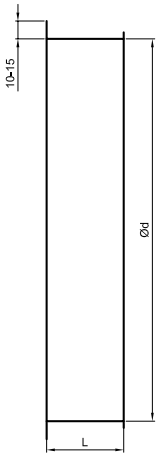

Code	Ød [mm]	Lenght L			
		40 [mm]	50 [mm]	70 [mm]	90 [mm]
ILSQT-150	150	ok	ok	ok	ok
ILSQT-160	160	ok	ok	ok	ok
ILSQT-180	180	ok	ok	ok	ok
ILSQT-200	200	ok	ok	ok	ok
ILSQT-225	225	ok	ok	ok	ok
ILSQT-250	250	ok	ok	ok	ok
ILSQT-280	280	ok	ok	ok	ok
ILSQT-300	300	ok	ok	ok	ok
ILSQT-315	315	ok	ok	ok	ok
ILSQT-350	350	-	-	ok	ok
ILSQT-400	400	-	-	ok	ok
ILSQT-450	450	-	-	-	ok
ILSQT-500	500	-	-	-	ok
ILSQT-550	550	-	-	-	ok
ILSQT-600	600		-	-	ok

ALNOR® ventilation systems
is a registered trademark protected by a technical patent. All modification rights reserved.

Flexible duct connector

ILAFQT

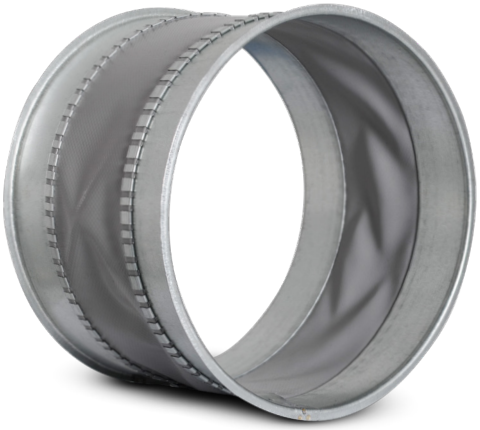

Description

ILAFQT is a flexible duct connector for TRANS-Quick system. Flexible duct connector is used to eliminate vibrations in the ventilation ductwork. It's made of AMT duct connector, available in a variety of materials (coatings): PVC, Silicone, PU.

Available materials - designation example
ILAFQT-PVC-160 - galvanised steel sheet

Designation example
Product code: **ILAFQT - aaa - bbb**

type
material
diameter Ød

Dimensions

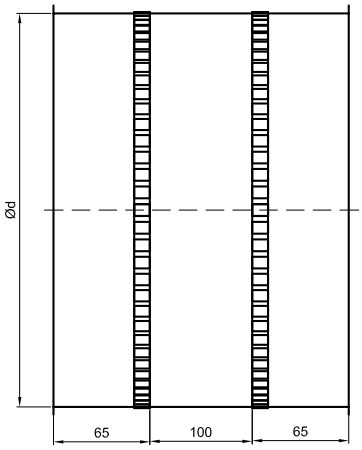

Code	Ød [mm]	Lenght L [mm]
ILAFQT-...-100	100	230
ILAFQT-...-125	125	230
ILAFQT-...-150	150	230
ILAFQT-...-160	160	230
ILAFQT-...-180	180	230
ILAFQT-...-200	200	230
ILAFQT-...-225	225	230
ILAFQT-...-250	250	230
ILAFQT-...-280	280	230
ILAFQT-...-300	300	230
ILAFQT-...-315	315	230
ILAFQT-...-350	350	230
ILAFQT-...-400	400	230
ILAFQT-...-450	450	230
ILAFQT-...-500	500	230
ILAFQT-...-550	550	230
ILAFQT-...-600	600	230

ALNOR® ventilation systems
is a registered trademark protected by a technical patent. All modification rights reserved.

End cap for dust collection systems

CSHQT



Description

The end cap with a handle is used to terminate a duct run in clamp-together system by snapping on FLKA-C or FLKA pull rings. End caps are made of galvanised steel in 0.9 mm thickness.

Available materials - designation example
CSHQT-160-090 - galvanised steel sheet

Designation example
Product code: **CSHQT - aaa - bbb**

type
diameter Ød
thickness

Dimensions

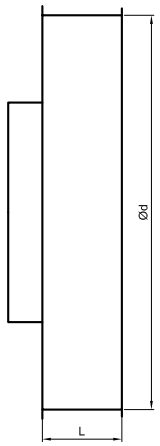

Diameter Ød [mm]	*Lenght L [mm]*
100	40
125	40
150	40
160	40
180	40
200	40
225	40
250	40
300	40
315	40
350	60
400	60
450	80
500	80
550	80
600	80

ALNOR® ventilation systems
is a registered trademark protected by a technical patent. All modification rights reserved.

Silencer for dust extraction system TRANS-Quick

SILQT-GL



Description

SILQT-GL silencer is a special version of our standard SIL silencer, equipped with TRANS-Quick system clamping elements and outer jacket made of plain butt-welded metal sheet. Insulation thickness: 100, 50 and 25 mm; lengths: 600 and 900 mm. Depending on the diameter, silencers are made of 0.7 mm (dia 100-315mm) or 1.0 mm (dia 350-630mm) metal sheet. For sound insulation and pressure drop data refer to the technical sheet of the SIL silencer.

Available materials - designation example
SILQT-GL-...-....-...- galvanized steel sheet, mineral wool

Designation example
Product code: **SILQT-QT - aaa - bbb - ccc**

type
diameter Ød
insulation thick.
length

Dimensions

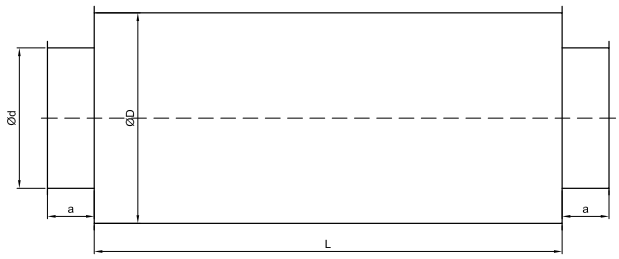

Product code	Insulation (mm)	Diameter Ød (mm)	External dia. ØD (mm)	Length L (mm)	a (mm)
SILQT-GL-100-100-600	100	100	300	600	40
SILQT-GL-100-125-600	100	125	315	600	40
SILQT-GL-100-140-600	100	140	350	600	40
SILQT-GL-100-150-600	100	150	350	600	40
SILQT-GL-100-160-600	100	160	350	600	40
SILQT-GL-100-180-600	100	180	350	600	40
SILQT-GL-100-200-600	100	200	400	600	40
SILQT-GL-100-225-600	100	225	450	600	40
SILQT-GL-100-250-600	100	250	450	600	40
SILQT-GL-100-280-600	100	280	450	600	40
SILQT-GL-100-300-600	100	300	500	600	40
SILQT-GL-100-315-600	100	315	500	600	40
SILQT-GL-100-350-600	100	350	550	600	80
SILQT-GL-100-400-600	100	400	600	600	80
SILQT-GL-100-450-600	100	450	630	600	80
SILQT-GL-100-500-600	100	500	710	600	80
SILQT-GL-100-550-600	100	550	800	600	80
SILQT-GL-100-600-600	100	600	800	600	80
SILQT-GL-100-630-600	100	630	800	600	80
SILQT-GL-100-100-900	100	100	300	900	40
SILQT-GL-100-125-900	100	125	315	900	40
SILQT-GL-100-140-900	100	140	350	900	40
SILQT-GL-100-150-900	100	150	350	900	40
SILQT-GL-100-160-900	100	160	350	900	40
SILQT-GL-100-180-900	100	180	350	900	40
SILQT-GL-100-200-900	100	200	400	900	40
SILQT-GL-100-225-900	100	225	450	900	40
SILQT-GL-100-250-900	100	250	450	900	40
SILQT-GL-100-280-900	100	280	450	900	40
SILQT-GL-100-300-900	100	300	500	900	40
SILQT-GL-100-315-900	100	315	500	900	40

ALNOR® ventilation systems
is a registered trademark protected by a technical patent. All modification rights reserved.

Silencer for dust extraction syteme TRANS-Quick

SILQT-GL

Product code	Insulation (mm)	Diameter Ød (mm)	External dia. ØD (mm)	Length L (mm)	a (mm)
SILQT-GL-100-350-900	100	350	550	900	80
SILQT-GL-100-400-900	100	400	600	900	80
SILQT-GL-100-450-900	100	450	630	900	80
SILQT-GL-100-500-900	100	500	710	900	80
SILQT-GL-100-550-900	100	550	800	900	80
SILQT-GL-100-600-900	100	600	800	900	80
SILQT-GL-100-630-900	100	630	800	900	80
SILQT-GL-50-100-600	50	100	200	600	40
SILQT-GL-50-125-600	50	125	225	600	40
SILQT-GL-50-140-600	50	140	250	600	40
SILQT-GL-50-150-600	50	150	250	600	40
SILQT-GL-50-160-600	50	160	250	600	40
SILQT-GL-50-180-600	50	180	280	600	40
SILQT-GL-50-200-600	50	200	300	600	40
SILQT-GL-50-225-600	50	225	315	600	40
SILQT-GL-50-250-600	50	250	350	600	40
SILQT-GL-50-280-600	50	280	350	600	40
SILQT-GL-50-300-600	50	300	400	600	40
SILQT-GL-50-315-600	50	315	400	600	40
SILQT-GL-50-350-600	50	350	450	600	80
SILQT-GL-50-400-600	50	400	500	600	80
SILQT-GL-50-450-600	50	450	550	600	80
SILQT-GL-50-500-600	50	500	600	600	80
SILQT-GL-50-550-600	50	550	630	600	80
SILQT-GL-50-600-600	50	600	710	600	80
SILQT-GL-50-630-600	50	630	710	600	80
SILQT-GL-50-100-900	50	100	200	900	40
SILQT-GL-50-125-900	50	125	225	900	40
SILQT-GL-50-140-900	50	140	250	900	40
SILQT-GL-50-150-900	50	150	250	900	40
SILQT-GL-50-160-900	50	160	250	900	40
SILQT-GL-50-180-900	50	180	280	900	40
SILQT-GL-50-200-900	50	200	300	900	40
SILQT-GL-50-225-900	50	225	315	900	40
SILQT-GL-50-250-900	50	250	350	900	40
SILQT-GL-50-280-900	50	280	350	900	40
SILQT-GL-50-300-900	50	300	400	900	40
SILQT-GL-50-315-900	50	315	400	900	40
SILQT-GL-50-350-900	50	350	450	900	80
SILQT-GL-50-400-900	50	400	500	900	80
SILQT-GL-50-450-900	50	450	550	900	80
SILQT-GL-50-500-900	50	500	600	900	80
SILQT-GL-50-550-900	50	550	630	900	80
SILQT-GL-50-600-900	50	600	710	900	80
SILQT-GL-50-630-900	50	630	710	90	80

Product code	Insulation (mm)	Diameter Ød (mm)	External dia. ØD (mm)	Length L (mm)	a (mm)
SILQT-GL-25-100-600	25	100	150	600	40
SILQT-GL-25-125-600	25	125	180	600	40
SILQT-GL-25-140-600	25	140	200	600	40
SILQT-GL-25-150-600	25	150	200	600	40
SILQT-GL-25-160-600	25	160	225	600	40
SILQT-GL-25-180-600	25	180	225	600	40
SILQT-GL-25-200-600	25	200	250	600	40
SILQT-GL-25-225-600	25	225	280	600	40
SILQT-GL-25-250-600	25	250	300	600	40
SILQT-GL-25-280-600	25	280	315	600	40
SILQT-GL-25-300-600	25	300	350	600	40
SILQT-GL-25-315-600	25	315	350	600	40
SILQT-GL-25-350-600	25	350	400	600	80
SILQT-GL-25-400-600	25	400	450	600	80
SILQT-GL-25-450-600	25	450	500	600	80
SILQT-GL-25-500-600	25	500	550	600	80
SILQT-GL-25-550-600	25	550	600	600	80
SILQT-GL-25-600-600	25	600	630	600	80
SILQT-GL-25-630-600	25	630	710	600	80
SILQT-GL-25-100-900	25	100	150	900	40
SILQT-GL-25-125-900	25	125	180	900	40
SILQT-GL-25-140-900	25	140	200	900	40
SILQT-GL-25-150-900	25	150	200	900	40
SILQT-GL-25-160-900	25	160	225	900	40
SILQT-GL-25-180-900	25	180	225	900	40
SILQT-GL-25-200-900	25	200	250	900	40
SILQT-GL-25-225-900	25	225	280	900	40
SILQT-GL-25-250-900	25	250	300	900	40
SILQT-GL-25-280-900	25	280	315	900	40
SILQT-GL-25-300-900	25	300	350	900	40
SILQT-GL-25-315-900	25	315	350	900	40
SILQT-GL-25-350-900	25	350	400	900	80
SILQT-GL-25-400-900	25	400	450	900	80
SILQT-GL-25-450-900	25	450	500	900	80
SILQT-GL-25-500-900	25	500	550	900	80
SILQT-GL-25-550-900	25	550	600	900	80
SILQT-GL-25-600-900	25	600	630	900	80
SILQT-GL-25-630-900	25	630	710	900	80

ALNOR® ventilation systems
is a registered trademark protected by a technical patent. All modification rights reserved.

Manifold for dust extraction system TRANS-Quick

MPRQT

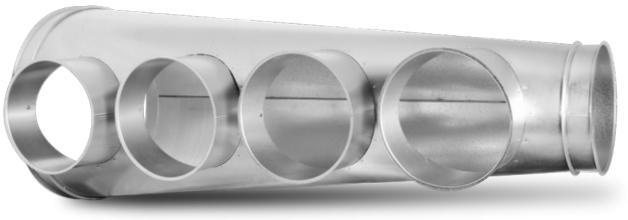

Dimensions

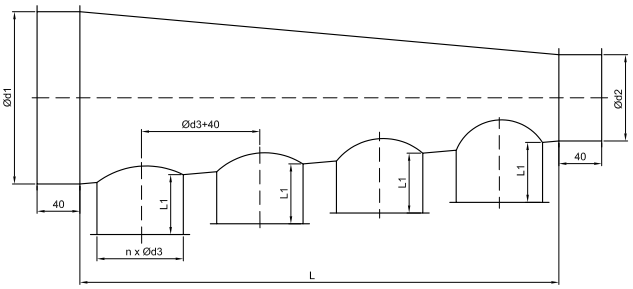

Description

MPRQT Reducing manifold is used for branching out extraction ducting, commonly by using PUQT flexible hoses which are directly connected to terminal units. The reducer allows to maintain a even extraction from each of the spigots, the number of which can range from 2 to 4.
Standard dimensions are given in the table below.
Other combinations of diameters and spigots (e.g. spigots without turned-up edge for flexible hoses) are available on request.

Available materials - designation example
MPRQT-400-200-200-4-070 - galvanized steel sheet

Designation example
Product Code: MPRQT **- aaa - bbb - ccc - ddd - eee**

type
diameter $Ød_1$
diameter $Ød_2$
diameter $Ød_3$
no of spigots $Ød_3$
thickness

Diameter $Ød_1$ *(mm)*	*Diameter $Ød_3$* *(mm)*	*Diameter $Ød_3$* *(mm)*	*n*	*L* *(mm)*	*L_1* *(mm)*
200	100	100	2	280	60
200	100	100	3	420	60
200	100	100	4	560	60
400	100	100	3	420	60
400	100	100	4	560	60
400	200	100	2	280	60
400	200	100	3	420	60
400	200	100	4	560	60
400	200	200	2	480	60
400	200	200	3	720	60
400	200	200	4	960	60
400	300	100	2	280	60
400	300	100	3	420	60
400	300	100	4	560	60
400	300	250	2	580	60
400	300	250	3	870	60
400	300	250	4	1160	60
600	400	100	2	280	60
600	400	100	3	420	60
600	400	100	4	560	60
600	400	250	2	580	90
600	400	250	3	870	60
600	400	250	4	1160	60

ALNOR® ventilation systems
is a registered trademark protected by a technical patent. All modification rights reserved.

Extraction hose

PUQT-AS / PUQT



Description

PUQT flexible hoses are used to connect end extraction ducting directly to the machinery or local extractors. Hoses are made of polyurethane; wall thickness: 0.5mm, 0.7mm and 1.0 mm, reinforced with steel spiral wire.
PUQT industrial hoses have high resistance to abrasion, chemical compounds and fire resistance B1 according to DIN 4102. The PUQT-AS version is antistatic in accordance with DIN ISO 8031.

Available materials - designation example

PUQT-...-AS - polyurethane, steel spiral wire, anti-static
PUQT-... - polyurethane, steel spiral wire

Designation example

Product Code: **PUQT - aaa - bbb - AS**

type
wall thickness
diameter Ød
anti-static

Dimensions

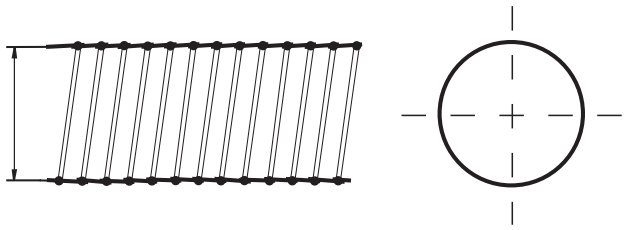

Diameter Ød (mm)	*Wire pitchi (mm)*	*Wire diameter (mm)*	*Negative pressure (Pa)*		
			0.5	0.7	1.0
80	25	1.8	22000	23500	24000
100	25	1.8	20000	21000	22000
120	25	1.8	18000	18000	19000
125	25	1.8	15500	16000	17000
140	25	1.8	13500	13500	14000
150	30	2.0	11000	12000	12500
160	30	2.0	9500	10500	11000
180	30	2.0	6900	8000	8000
200	30	2.0	5000	5700	5800
225	30	2.0	3800	4200	4300
250	30	2.0	2900	2900	3000
280	30	2.0	1900	2000	2000
300	30	2.0	1400	1400	1500

Technical data

Product code	*Material*	*Wall thickness (mm)*	*Temp. range (˚C)*	*Fire class acc. DIN 4102*	*Anti-static DIN ISO 8031*
PUQT-05-...-AS	PU	0.5	-40/+90	B1	YES
PUQT-07-...-AS	PU	0.7	-40/+90	B1	YES
PUQT-10-...-AS	PU	1.0	-40/+90	B1	YES
PUQT-05-...	PU	0.5	-40/+90	B1	-
PUQT-07-...	PU	0.7	-40/+90	B1	-
PUQT-10-...	PU	1.0	-40/+90	B1	-

ALNOR® ventilation systems
is a registered trademark protected by a technical patent. All modification rights reserved.

Access door for TRANS-Quick system

IPRQT-DUCT-H



Description

The access door is pre-installed on the TRANS-Quick pipe. Access doors are equipped with hinges, draw latches and EPDM seals. The pipe is butt welded and has with a rolled-up edge. In the IPRQT-DUCT-H2 version, only draw latches are used for fastening instead of hinges. This solution allows easy dismounting the cover in hard to reach places. Available in 0.7 or 0.9 mm thickness.



The photo on the left shows IPRQT-DUCT-H2 access door with the possibility of removing the cover completely. Especially useful in hard to reach places.

Available materials - designation example
IPRQT-DUCT-H-... - galvanised steel sheet
IPRQT-DUCT-H2-... - galvanised steel sheet

Designation example
Product Code: **IPRQT-DUCT-H - aaa**

type
diameter Ød

Dimensions

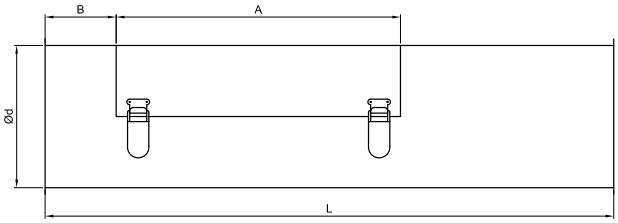

Diameter Ød (mm)	Sheet thickness (mm)	L (mm)	A (mm)	B (mm)
100	0.7	400	180	50
125	0.7	400	180	50
150	0.7	500	230	50
160	0.7	500	230	50
180	0.7	600	280	50
200	0.7	600	280	50
225	0.7	600	280	50
250	0.7	800	380	150
300	0.7	800	380	150
315	0.7	800	380	150
350	0.7	1000	480	150
400	0.7	1000	480	150
450	0.7	1000	480	150
500	0.7	1000	480	150
550	0.7	1000	480	150
600	0.7	1000	480	150
100	0.9	400	180	50
125	0.9	400	180	50
140	0.9	400	180	50
150	0.9	500	230	50
160	0.9	500	230	50
180	0.9	600	280	50
200	0.9	600	280	50
225	0.9	600	280	50
250	0.9	800	380	150
280	0.9	800	380	150
300	0.9	800	380	150
315	0.9	800	380	150
350	0.9	1000	480	150
400	0.9	1000	480	150
450	0.9	1000	480	150
500	0.9	1000	480	150
550	0.9	1000	480	150
600	0.9	1000	480	150

ALNOR® ventilation systems
is a registered trademark protected by a technical patent. All modification rights reserved.

Regulating damper

DASQT / DASQT-B



Description

DASQT damper is made of galvanized steel sheet, it is used to regulate the air flow in TRANS-Quick dust extraction system when airtight seal is not required. This damper is also available in the DASQT-B airtight version - which also has a thicker rod and additional reinforcements. The damper position indicator is visible on the handle, adjustment is possible within 0° ÷ 90° Available in 0.7 and 0.9mm thickness.

Available materials - designation example

DASQT-... - galvanised steel sheet
DASQT-B-... - galvanised steel sheet + reinforcement

Designation example

Product code: **DASQT - aaa - bbb**

type
diameter Ød
thickness

Dimensions

DASQT

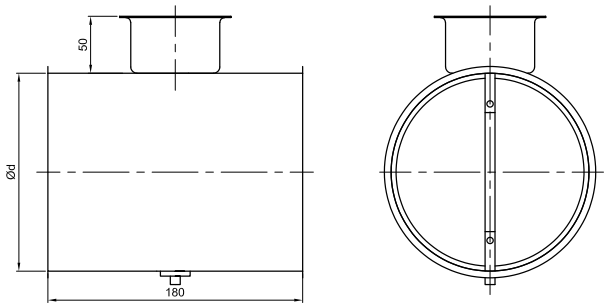

Product code	*Diameter Ød (mm)*	*Length L (mm)*
DASQT-100	100	180
DASQT-125	125	180
DASQT-150	150	180
DASQT-160	160	180
DASQT-180	180	180
DASQT-200	200	180
DASQT-225	225	180
DASQT-250	250	180
DASQT-300	300	180
DASQT-315	315	180
DASQT-350	350	180
DASQT-400	400	180
DASQT-450	450	180
DASQT-500	500	180
DASQT-550	550	180
DASQT-600	600	180

ALNOR® ventilation systems
is a registered trademark protected by a technical patent. All modification rights reserved.

Regulating damper

DASQT / DASQT-B

Dimensions

DASQT-B

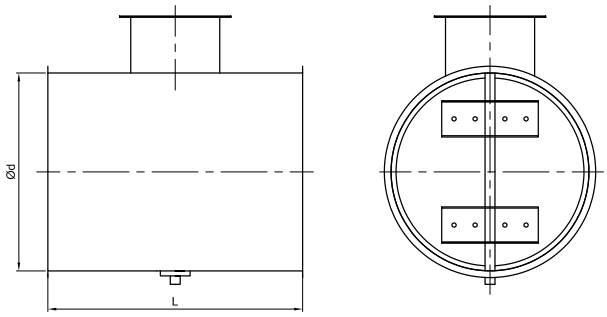

Product code	*Diameter Ød (mm)*	*Length L (mm)*
DASQT-B-100	100	200
DASQT-B-125	125	200
DASQT-B-140	140	200
DASQT-B-160	160	200
DASQT-B-200	200	200
DASQT-B-225	225	200
DASQT-B-250	250	200
DASQT-B-280	280	200
DASQT-B-315	315	265
DASQT-B-350	350	265
DASQT-B-400	400	265

DASQT-B Ød>400

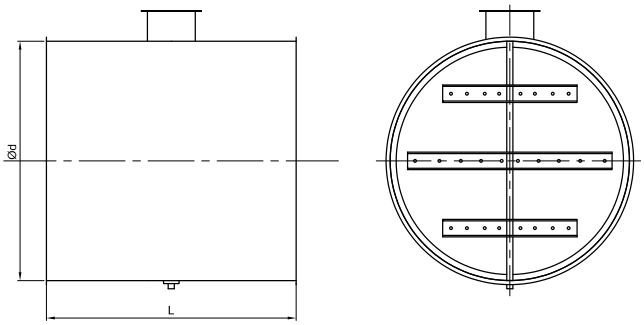

Product code	*Diameter Ød (mm)*	*Length L (mm)*
DASQT-B-450	450	305
DASQT-B-500	500	400
DASQT-B-550	550	400
DASQT-B-630	630	500
DASQT-B-710	710	600
DASQT-B-800	800	600
DASQT-B-900	900	600
DASQT-B-1000	1000	600

ALNOR® ventilation systems
is a registered trademark protected by a technical patent. All modification rights reserved.

Airtight closing damper

DATQT / DATQT-B



Description

The DATQT damper is made of galvanized steel sheet, it is used to regulate the air flow in TRANS-Quick dust extraction system and enables airtight shut-off of the airflow due to the additional seal on the closing element. This damper is also available in the DATQT-B version - which has a thicker rod and additional reinforcements. The damper position indicator is visible on the handle, adjustment is possible within 0° ÷ 90°. Available in 0.7 and 0.9 mm thickness.

Available materials - designation example

DATQT-... - galvanized steel sheet
DATQT-B-... - galvanized steel sheet + reinforcement

Designation example

Product code: **DATQT - aaa - bbb**

type
diameter Ød
thickness

Dimensions

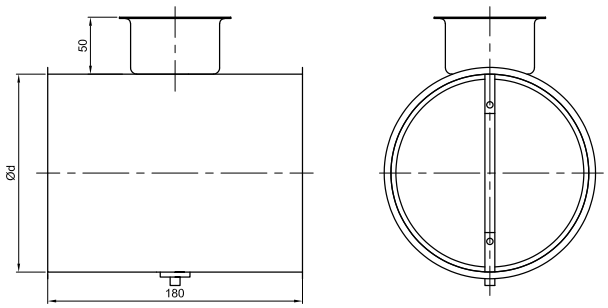

Product code	Diameter Ød (mm)	Length L (mm)
DATQT-100	100	180
DATQT-125	125	180
DATQT-150	150	180
DATQT-160	160	180
DATQT-180	180	180
DATQT-200	200	180
DATQT-225	225	180
DATQT-250	250	180
DATQT-300	300	180
DATQT-315	315	180
DATQT-350	350	180
DATQT-400	400	180
DATQT-450	450	180
DATQT-500	500	180
DATQT-550	550	180
DATQT-600	600	180

ALNOR® ventilation systems
is a registered trademark protected by a technical patent. All modification rights reserved.

Airtight closing damper

DATQT / DATQT-B

Dimensions

DATQT-B

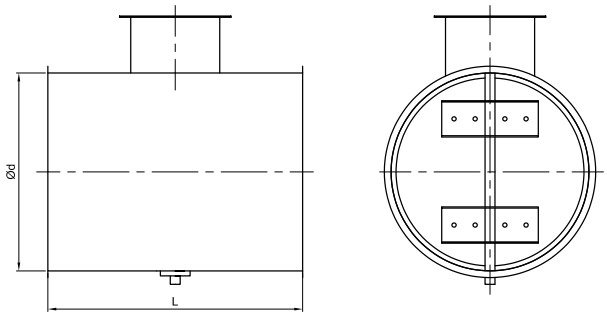

Product code	*Diameter Ød (mm)*	*Length L (mm)*
DATQT-B-100	100	200
DATQT-B-125	125	200
DATQT-B-140	140	200
DATQT-B-160	160	200
DATQT-B-200	200	200
DATQT-B-225	225	200
DATQT-B-250	250	200
DATQT-B-280	280	200
DATQT-B-315	315	265
DATQT-B-350	350	265
DATQT-B-400	400	265

DATQT-B Ød>400

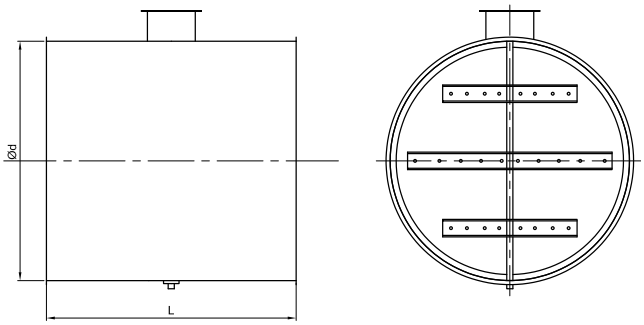

Product code	*Diameter Ød (mm)*	*Length L (mm)*
DATQT-B-450	450	305
DATQT-B-500	500	400
DATQT-B-550	550	400
DATQT-B-630	630	500
DATQT-B-710	710	600
DATQT-B-800	800	600
DATQT-B-900	900	600
DATQT-B-1000	1000	600

ALNOR® ventilation systems
is a registered trademark protected by a technical patent. All modification rights reserved.

Backdraft damper for TRANS-Quick system

DAOSQT



Description

The DAOSQT backdraft damper automatically closes the ventilation duct when there is no airflow (the exhaust is switched off). The damper prevents reverse airflow and natural airflow in the ductwork. The use of a foam seal eliminates the noise when closing the damper, the split flap closure is held closed with a spring gear, which makes it also possible to use the damper in vertical installations.

Available materials - designation example
DAOSQT-... - galvanized steel sheet

Designation example
Product code: **DAOSQT - aaa**

type
diameter Ød

Dimensions

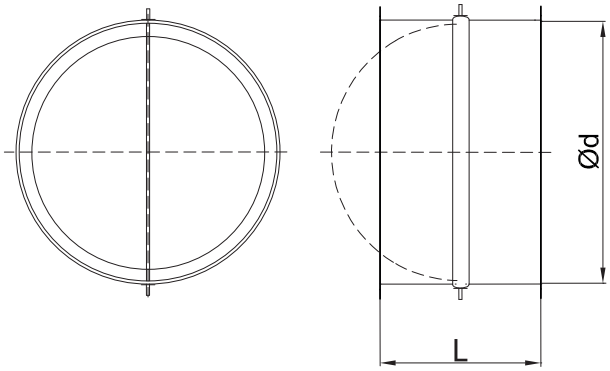

Product code	*Diameter Ød [mm]*	*L [mm]*
DAOSQT-100	100	80
DAOSQT-125	125	80
DAOSQT-150	150	80
DAOSQT-160	160	80
DAOSQT-180	180	80
DAOSQT-200	200	80
DAOSQT-225	225	80
DAOSQT-250	250	80
DAOSQT-300	300	80
DAOSQT-315	315	80
DAOSQT-350	350	100
DAOSQT-400	400	100
DAOSQT-450	450	100
DAOSQT-500	500	100

ALNOR® ventilation systems
is a registered trademark protected by a technical patent. All modification rights reserved.

Manual sliding damper for dust extraction systems

GKQT



Description

Sliding damper is equipped with manually operated damper plate. It is used in dust collection systems to shut off a line or control the airflow.

There is also available the sliding damper with pneumatic actuator - GKQTM.

Available materials - designation example
GKQT-160 - galvanised steel sheet

Designation example
Product Code: **GKQT - aaa**

type
diameter Ød

Dimensions

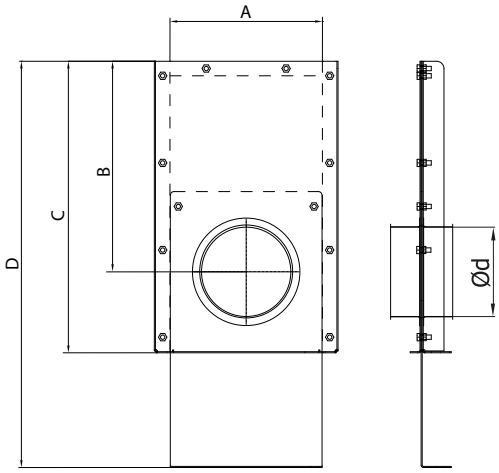

Diameter Ød [mm]	A [mm]	B [mm]	C [mm]	D [mm]
100	184	210	320	455
125	209	290	400	555
150	244	300	405	590
160	244	300	405	600
180	265	330	460	640
200	315	370	515	750
225	335	450	620	910
250	440	530	757	1120
300	440	530	757	1120
315	400	530	757	1120
350	440	593	836	1196
400	484	675	915	1355
450	484	675	915	1355
500	685	960	1300	1940
550	685	960	1300	1940
600	685	960	1300	1940

ALNOR® ventilation systems
is a registered trademark protected by a technical patent. All modification rights reserved.

Pneumatic sliding damper for dust extraction systems

GKMQT

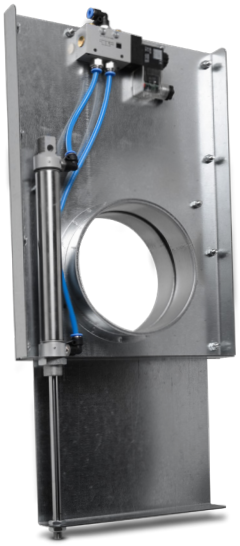

Description

Sliding damper is equipped with a pneumatic actuator. Sliding damper (blast gate) is used in dust collection systems to shut off a line or control the air flow.

The power supply of the solenoid valve: 230V, 24V AC or 24V DC should be specified during the ordering process.

Available materials - designation example
GKMQT-160 - galvanised steel sheet

Designation example
Product Code: **GKMQT - aaa**

type
diameter Ød

Dimensions

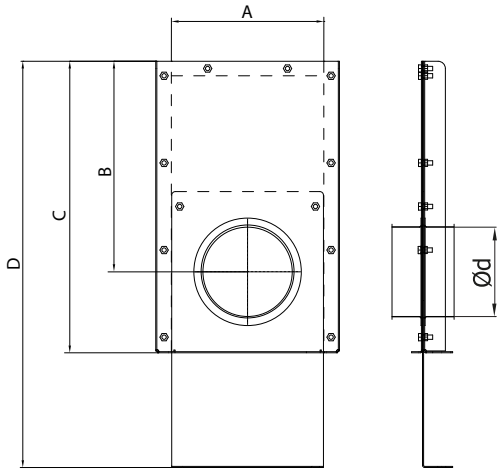

Diameter Ød [mm]	A [mm]	B [mm]	C [mm]	D [mm]
100	184	210	320	455
125	209	290	400	555
150	244	300	405	590
160	244	300	405	600
180	265	330	460	640
200	315	370	515	750
225	335	450	620	910
250	440	530	757	1120
300	440	530	757	1120
315	400	530	757	1120
350	440	593	836	1196
400	484	675	915	1355
450	484	675	915	1355
500	685	960	1300	1940
550	685	960	1300	1940
600	685	960	1300	1940

ALNOR® ventilation systems
is a registered trademark protected by a technical patent. All modification rights reserved.

Download Wentyle
Download AlnorCAM
B2B ordering

SMOKE system
Single-compartment circular smoke ventilation ducts with components

ALNOR reserves the right to modify technical specifications in line with the policy of continuous product improvement.

ALNOR® ventilation systems
is a legally protected trademark and technical patent. All rights reserved.

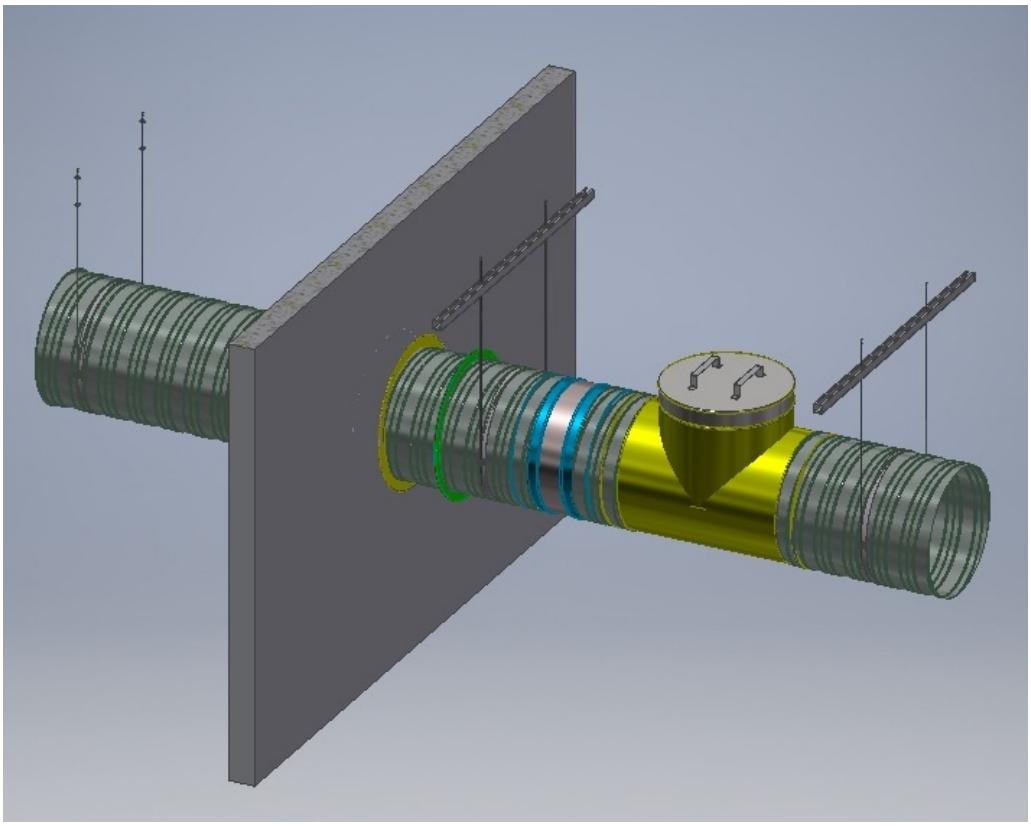

About the system

The system of single-compartment steel, circular smoke extraction ducts in E $_{600}$ 120 (h_o) S1500 single fire resistance class is intended to be used in the construction industry in a horizontal system as elements creating a smoke extraction ventilation system or combined ventilation, fulfilling at the same time the functions of general and smoke extraction ventilation, assuming that they serve only the compartment in which they have been installed. Systems serving one fire compartment may be independent systems or may be combined with a collective, multi-compartment system. The main task of the smoke extraction systems is to remove hot gases and smoke from the area covered by the fire in order to facilitate the evacuation of people and to enable the extinguishing action and the evacuation of people from the area at risk, while complying with the criteria of fire and/or smoke tightness specified under conditions of exposure to a temperature of 600°C.

The system of smoke extraction ducts consists of:

- standard straight duct sections and round fittings (bends, end caps, T-pieces, reducers, etc.), of a diameter from Ø100 to Ø1000mm,
- flexible duct connectors, type ILA-NSL-SMO, ILA-K-SMO,
- circular silencers, type SIL-GL-SMO,
- smoke extraction grilles, type SGR-SMO-0H (0V).

Intended use

They can also be used in mixed-type installations, which simultaneously perform the function of residential ventilation and smoke extraction, provided that, in the smoke extraction function, they operate only in the fire zone in which they are installed. In the case of combination systems, the smoke extraction function is primary. They also may be independent systems or may be combined with a collective, multi-compartment system. It should be remembered that passing through a fire compartment is treated as an element of a multi-compartment system.

Application

SMOKE system single-compartment circular smoke extraction ducts have the following application areas:

- Smoke extraction ducts are designed for single fire compartments,
- The smoke extraction ducts are available in diameter range is from Ø100 to Ø1000mm,
- The maximum temperature of the fire gases discharged through the SMOKE system ducts is 600 °C,
- Individual duct sections and ventilation fittings of SMOKE system ducts may only be installed horizontally (vertical installation is not permitted),
- The scope of application of smoke extraction ducts includes ventilation systems with operating pressure from -1500 Pa to +500 Pa.

ALNOR® ventilation system
is a legally protected trademark and technical patent. All rights reserved.

Standard

The SMOKE system steel, single-compartment, round smoke extraction ducts, together with their components, are classified according to the PN-EN 13501-4+A1:2016 in $E_{600}120$ (h_o) S1500single fire resistance class, and as non-combustible and non-fire spreading.

Seals

All male components of the SMOKE system smoke extraction ducts are equipped with GASK double lip seals for ventilation fittings made of EPDM and a 1.8 mm thick and 10 mm wide intumescent seal.



The GASK seal is made of EPDM material, which is resistant to ozone, UV radiation and temperature fluctuations in the range of -30%˚C÷+100˚C. It is fastened at the end of the male smoke extraction coupling through its rolled-up, tightened edge.

The operation of the GASK seal is shown in the figure below.

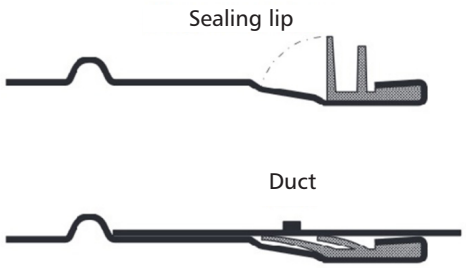

GASK seal type depending on the diameter range

80-280 mm

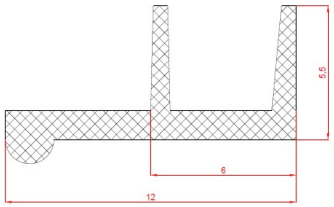

300-500 mm

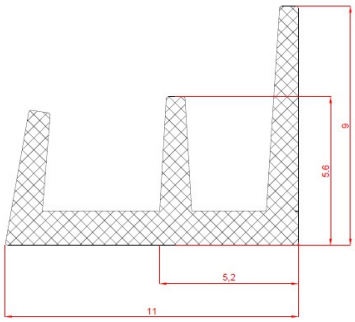

560-1000 mm

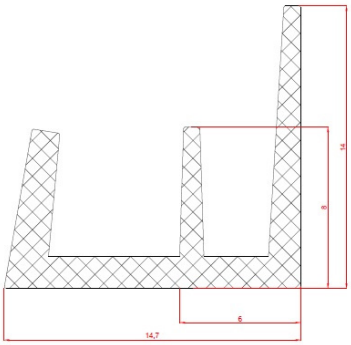

A 10 mm thick and 10 mm wide i**ntumescent seal**, under the influence of high temperature of about 180˚C, increases its volume several times, causing sealing of the system during a fire so that hot gases and smoke do not escape to the outside and so that the vacuum for their discharge is maintained.

ALNOR® ventilation system
is a legally protected trademark and technical patent. All rights reserved.

Airtightness

The components of the SMOKE system circular smoke extraction duct components meet the requirements of airtightness class D if all recommendations for correct installation, transport, storage, etc. are followed.

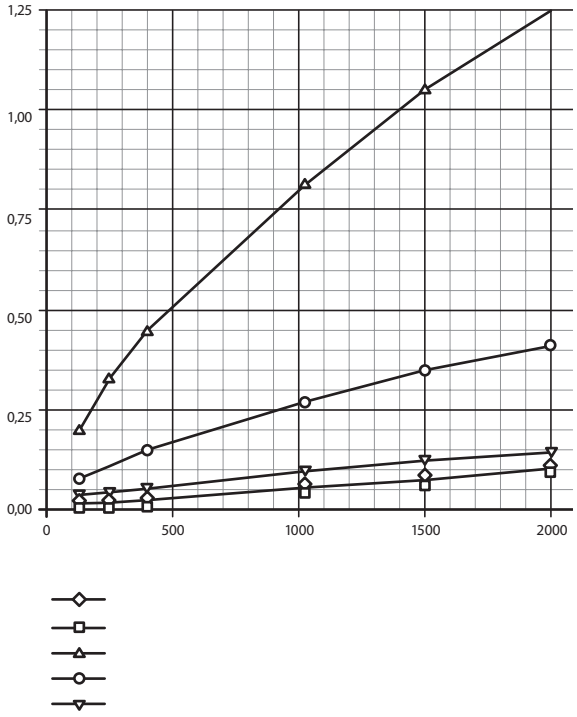

Tolerances for dimensions

Tolerances for fittings dimensions:

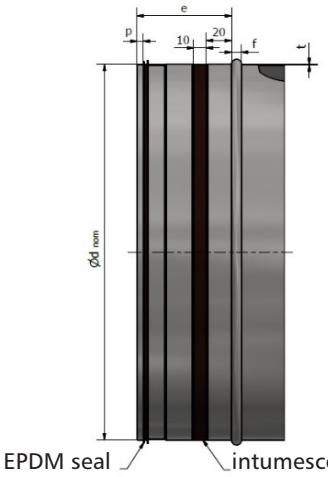

Fitting diameter $Ød_{nom}$ [mm]	Sheet thickness t [mm]	Width f [mm]	Distance e [mm]	Distance p [mm]	Tolerance [mm]	
100	0.7	8	55	7	+0	-6
112	0.7	8	55	7	+0	-6
125	0.7	8	55	7	+0	-6
140	0.7	8	55	7	+0	-6
150	0.7	8	55	7	+0	-6
160	0.7	8	55	7	+0	-6
180	0.7	8	55	7	+0	-6
200	0.7	8	55	7	+0	-6
224	0.7	8	55	7	+0	-6
250	0.7	8	55	7	+0	-6
280	0.7	8	55	7	+0	-6
300	0.7	8	55	7	+0	-6
315	0.7	8	55	7	+0	-6
355	0.7	8	55	7	+0	-6
400	0.7	8	55	7	+0	-6
450	0.7	8	75	7	+0	-10
500	0.7	8	75	7	+0	-10
560	0.7	8	75	9	+0	-10
600	0.7	8	75	9	+0	-10
630	0.7	8	75	9	+0	-10
710	0.7	10	100	9	+0	-10
800	0.9	10	100	9	+0	-10
900	0.9	12	100	9	+0	-10
1000	0.9	12	115	9	+0	-20

ALNOR® ventilation system
is a legally protected trademark and technical patent. All rights reserved.

Tolerances for diameters

Tolerance for ducts and female couplings		
diameter $Ød_{nom}$ *[mm]*	*inner diameter* $Ød_{min}$ - $Ød_{max}$ *[mm]*	*sheet thickness* t_{nom} *[mm]*
100	100.0-100.5	0.7
112	112.0-112.5	0.7
125	125.0-125.5	0.7
140	140.0-140.6	0.7
150	150.0-150.6	0.7
160	160.0-160.6	0.7
180	180.0-180.7	0.7
200	200.0-200.7	0.7
224	224.0-224.8	0.7
250	250.0-250.8	0.7
280	280.0-280.9	0.7
300	300.0-300.9	0.7
315	315.0-315.9	0.7
355	355.0-356.0	0.7
400	400.0-401.0	0.7
450	450.0-451.1	0.7
500	500.0-501.1	0.7
560	560.0-561.2	0.7
600	600.0-601.2	0.7
630	630.0-631.2	0.7
710	710.0-711.5	0.7
800	800.0-801.6	0.9
900	900.0-902.0	0.9
1000	1000.0-1002.0	0.9

Tolerances for male couplings		
diameter $Ød_{nom}$ *[mm]*	*outer diameter* $Ød_{min}$ - $Ød_{max}$ *[mm]*	*sheet thickness* t_{nom} *[mm]*
100	98.8-99.3	0.7
112	110.5-111.3	0.7
125	123.8-124.3	0.7
140	138.7-139.3	0.7
150	148.7-149.3	0.7
160	158.7-159.3	0.7
180	178.6-179.3	0.7
200	198.6-199.3	0.7
224	222.5-223.3	0.7
250	248.5-249.3	0.7
280	278.4-279.3	0.7
300	298.4-299.3	0.7
315	313.4-314.3	0.7
355	353.3-354.3	0.7
400	398.3-399.3	0.7
450	448.2-449.3	0.7
500	498.2-499.3	0.7
560	558.1-559.3	0.7
600	598.2-599.3	0.7
630	628.1-629.3	0.7
710	708.0-709.3	0.7
800	798.0-799.3	0.9
900	897.9-899.3	0.9
1000	997.9-999.3	0.9

Tolerances for sizes: L, H, r, rm, a

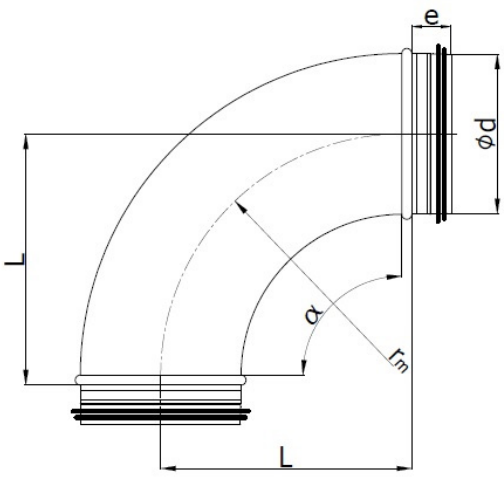

Sizes: L, r, rm, a	*Tolerance [mm]*
≤15 mm	±3
15 - 100 mm	±7
>100 mm	+10 -15
L (ducts)	± 0,005 L
a	± 2°

ALNOR® ventilation system
is a legally protected trademark and technical patent. All rights reserved.

Sealant

For sealing all components that are part of the SMOKE system smoke extraction ducts, in the places of welding and other joints, e.g. on fabric stitching in flexible duct connectors, we apply, from the inside, and in the case of flexible duct connectors from both sides, a high-temperature sealing compound (e.g. one-component fire retardant flexible silicone sealant with neutral hardening for internal and external use).

Assembly

The SMOKE system smoke extraction ducts should be installed according to the guidelines contained in the OMM, taking care of both the installers and the assembled system. Only the correct connection and installation will guarantee the correct functioning of the system in case of fire.
The smoke extraction ducts and other installation elements of the ventilation system should be made exclusively of non-combustible materials.
The SMOKE system ducts may only be installed in systems with a horizontal orientation. This means that the section of the system cannot be suspended from the vertical structure and in the vertical position.
The thermal or acoustic insulation of the SMOKE system ducts is acceptable for use on the outside of the ducts. It must be made in a way which guarantees:

- no damage to the structure and airtightness of ducts
- no spread of fire

In case of insulation - identification elements (stick-on labels) should be placed on the outer jacket for identification purposes.

Connection of the SMOKE system smoke extraction duct components - the male-female connection:

If necessary, cut the straight ducts SPR-Z-SMO to the required size with the cutting disc of the angle grinder, taking into account the length of the installation elements (in the male-female connection, the male piece fits into the female piece - dimension "e"). The cut must be perpendicular to the duct axis. Remember to wear safety goggles when cutting. Remove burrs and sharp edges using a file or other suitable tool. Clean the inside of the duct from residual chips.
The prepared ducts should be mounted by inserting the male coupling into the female one, turning it and pressing it so that the female coupling part stops at the male coupling stop fold. Then install self-drilling screws (Table 7.) around the perimeter to prevent them from slipping out. For a better fit, the screws should be installed in the correct order, opposite each other in a crosswise direction. Mount the screws 10 mm from the duct edge and the stop fold on the fitting.

Correct installation of smoke extraction ducts:



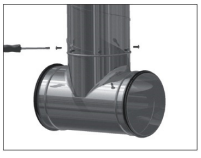

Size and number of screws depending on the diameter of the smoke extraction duct:

Diameter Ød [mm]	*Minimum screw size*	*Minimum number of screws*
100÷280	ST 3,2x13	4
300÷500	ST 3,2x13	8
560÷1000	ST 4,2x13	12

Connection of the SMOKE system smoke extraction duct components - flange connection:

Smoke extraction systems can be connected to each other using FLS flanges. In order to do so, the FLS flange should be slid onto the ILSL-SMO male coupling and then inserted into the female coupling (SPR-Z-SMO, MSF-SMO) according to the installation instructions as in the previous point and Tables 6 and 7. The flanges must be bolted using SRS-M8 bolts, NKS-M8 nuts, PDS-8 washers, using between them a flange gasket made of 1260˚C ceramic fibre paper with a thickness of 6 mm, with the same dimensions as the FLS flange.

Technical data of FLS flanges and flange gaskets made of ceramic fibre paper:

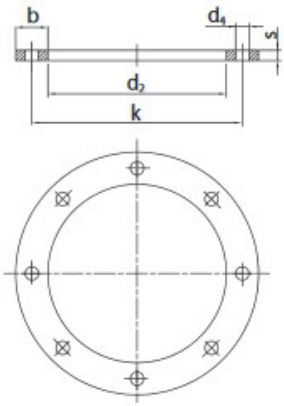

Ød$_{nom}$ [mm]	*Ød$_2$ [mm]*	*b x s- FLS flange*	*b x s- ceramic paper*	*Øk [mm]*	*Ød$_4$ [mm]*	*Number of holes [pcs.]*
100	102	25x3	25x6	132	8.5	4
112	114	25x3	25x6	144	8.5	4
125	127	25x3	25x6	157	8.5	4
140	142	25x4	25x6	172	8.5	6
150	152	25x4	25x6	182	8.5	6
160	162	25x4	25x6	192	8.5	6
180	182	25x4	25x6	212	8.5	6
200	203	25x4	25x6	233	8.5	6
224	227	25x4	25x6	257	8.5	6
250	253	25x4	25x6	283	8.5	6
280	283	30x4	30x6	317	8.5	8
300	303	30x4	30x6	337	8.5	8
315	318	30x4	30x6	352	8.5	8
355	358	30x4	30x6	392	8.5	8
400	404	30x4	30x6	438	8.5	8

ALNOR® ventilation system
is a legally protected trademark and technical patent. All rights reserved.

Assembly of SMOKE System ducts and fittings

$Ød_{nom}$ [mm]	$Ød_2$ [mm]	b x s- kołnierz FLS	b x s- papier ceramiczny	Øk [mm]	$Ød_4$ [mm]	Number of holes [pcs.]
450	454	30x4	30x6	488	8,5	8
500	504	30x4	30x6	538	8,5	8
560	564	35x4	35x6	600	8,5	12
600	604	35x4	35x6	640	8,5	12
630	634	35x4	35x6	670	8,5	12
710	714	35x4	35x6	750	8,5	12
800	804	35x4	35x6	840	8,5	16
900	904	35x4	35x6	940	8,5	16
1000	1005	35x4	35x6	1041	8,5	16

Suspension of SMOKE System ducts:

CLR suspension rings, PG threaded rods, TK drop-in anchors, NKS nuts, PDS-P and PDS washers are used to suspend ducts to the ceiling. At least one suspension ring should be placed as close as possible to the places where the ducts are connected at least 100 mm from the edge, but not more than 500 mm from the edge (it is recommended to install suspension clamps on each side of the joint). The distance between two suspension elements must not exceed 2000mm.

Types of suspension rings depending on the duct:
in duct diameter range from 100 to 400 mm

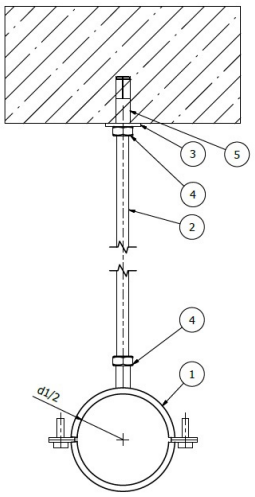

1. CLR - 2 mm thick and 20mm wide galvanized steel suspension ring.
2. PG8 - galvanized steel threaded rod.
3. PDS-P-8 - galvanized steel round washer DIN 9021.
4. NKS-M8 - galvanized steel hexagon nut.
5. TK8-3 or TK8-4 - steel drop-in anchors.

in duct diameter range from 450 to 1000 mm

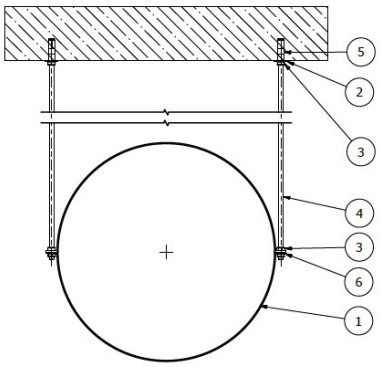

1. CLR - 2.5 mm thick and 25 mm wide galvanized steel suspension ring.
2. PDS-P-8 - galvanized steel round washer DIN 9021.
3. NKS-M8 - galvanized steel hexagon nut.
4. PG8 - galvanized steel threaded rod.
5. TK8-3 or TK8-4 - steel drop-in anchors.
6. PDS-8 - galvanized steel round washer DIN 125-1A.

Types of fixing, duct suspensions:

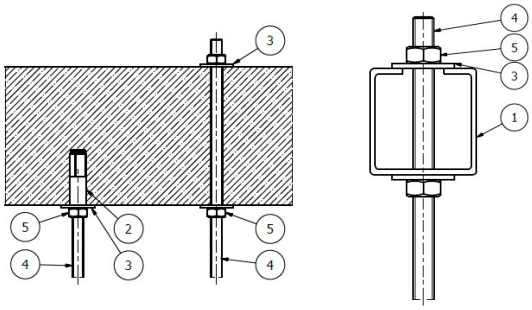

1. LDB – fixing rail.
2. TK8-3 lub TK8-4 – steel drop-in anchor.
3. PDS-P-8 – galvanized steel round washer DIN 9021.
4. PG8 – galvanized steel threaded rod.
5. NKS-M8 – galvanized steel hexagon nut.

ALNOR® ventilation system
is a legally protected trademark and technical patent. All rights reserved.

Technical data and specifications

Technical data and application of suspension system elements depending on diameters

D [mm]	*Threaded rod*	*Load capacity of anchors [kN]*	*Drop-in anchors*	*Suspension ring*	*Load capacity of suspension rings [kN]*	*Washer DIN 9021*	*Washer DIN 125-1A*	*Nut DIN 934*	*Fixing rail*
100	PG8 (M8)	0.7	TK8-3 lub TK8-4 (M8)	CLR-100	0.45	PDS-P-8	PDS-8	NKS-M8	LDB 30-30-1,5
112				CLR-112	0.45				
125				CLR-125	0.45				
140				CLR-140	0.45				
150				CLR-150	0.45				
160				CLR-160	0.38				
180				CLR-180	0.38				
200				CLR-200	0.38				
224				CLR-224	0.36				
250				CLR-250	0.36				
280				CLR-280	0.36				
300				CLR-300	0.36				
315				CLR-315	0.36				
355				CLR-355	0.32				
400				CLR-400	0.32				
450				CLR-450	0.42				LDB 41-41-2
500				CLR-500	0.40				
560				CLR-560	0.40				
600				CLR-600	0.40				
630				CLR-630	0.40				
710				CLR-710	0.40				
800				CLR-800	0.40				
900				CLR-900	0.40				
1000				CLR-1000	0.40				

Marking

All components of the SMOKE system smoke extraction ducts can be clearly identified by the permanent red-orange marking (in the form of a stick-on label), which is the product's control marking.
Each section of the smoke extraction ductwork must be marked with the following information:

- Name and identification number of the manufacturer
- Model, type
- Number of this standard and year of its publication (i.e. EN 12101-7:2011) with a reference to the general product name "Fire ventilation duct section"
- Fire resistance classification and other related information according to EN 13501-4
- In case the section of the fire ventilation duct is classified as "S" (EN 13501-4) the word smoke-proof shall be added
- Production date (month and year)

Classification

Classification according to EN 13501-4:2016 standard:

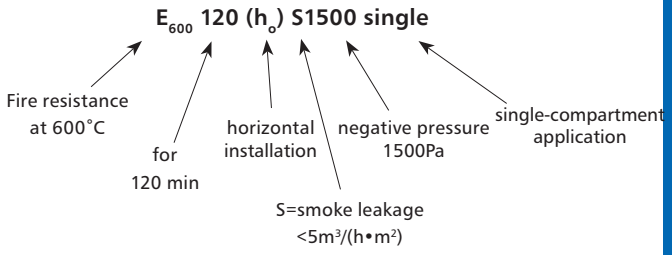

Label example:



ALNOR® ventilation system
is a legally protected trademark and technical patent. All rights reserved.

Spiral smoke extraction duct

SPR-Z-SMO

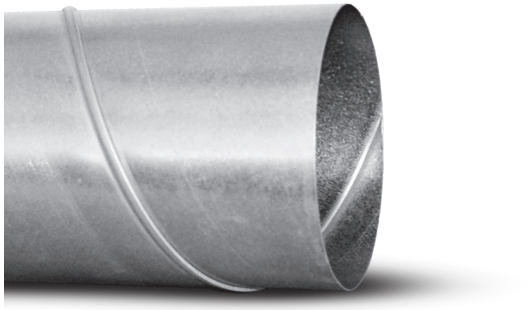

Description

SPR-Z-SMO SMOKE system spiral circular duct, fire resistance class:E_{600} 120 (h_o) S1500 single, designed for single-compartment smoke extraction systems and combined (dual-function) systems. Made of galvanized steel sheet DX51D+Z275 according to PN-EN10346:2011, thickness 0.7mm for diameters from 100-710mm, 0.9mm for diameters from 800-1000mm. The maximum length of a straight duct is 6000mm. Spiral ducts meet the requirements of airtightness class D in accordance with PN-EN 12237.
In the whole range of diameters they are made as spiral lockseamed ducts made of 137mm wide sheet metal sheet, additionally, from the diameter of 250 to 1000mm, they are corrugated;

SPR-Z-SMO ducts are produced in standard lengths L=3m and L=6m.
Order example: SPR-Z-SMO-200-070-0300

Product code example:

Product code: **SPR-Z-SMO - aaa - bbb - ccc**

type
diameter Ød
thickness
length

Dimensions

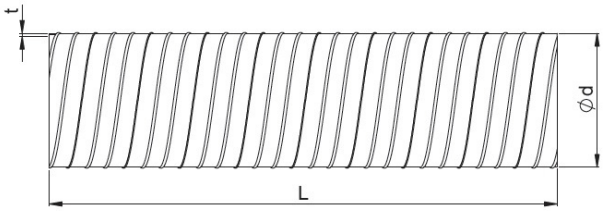

Shape of duct depending on diameter:
100 - 224mm

250 - 1000mm

$Ød_{nom}$ [mm]	Thickness t [mm]	Length L [m]	πd [m]	$\frac{\pi d^2}{4}$ [m^2]
100	0.7	6	0.314	0.008
112	0.7	6	0.352	0.010
125	0.7	6	0.393	0.012
140	0.7	6	0.440	0.015
150	0.7	6	0.471	0.018
160	0.7	6	0.502	0.020
180	0.7	6	0.565	0.025
200	0.7	6	0.628	0.031
224	0.7	6	0.703	0.039
250	0.7	6	0.785	0.049
280	0.7	6	0.879	0.062
300	0.7	6	0.942	0.071
315	0.7	6	0.989	0.078
355	0.7	6	1.115	0.099
400	0.7	6	1.256	0.126
450	0.7	6	1.413	0.159
500	0.7	6	1.570	0.196
560	0.7	6	1.758	0.246
600	0.7	6	1.884	0.283
630	0.7	6	1.978	0.312
710	0.7	6	2.229	0.396
800	0.9	3	2.512	0.503
900	0.9	3	2.826	0.636
1000	0.9	3	3.140	0.785

ALNOR® ventilation system
is a legally protected trademark and technical patent. All rights reserved.

SPR-Z-SMO

Technical specification

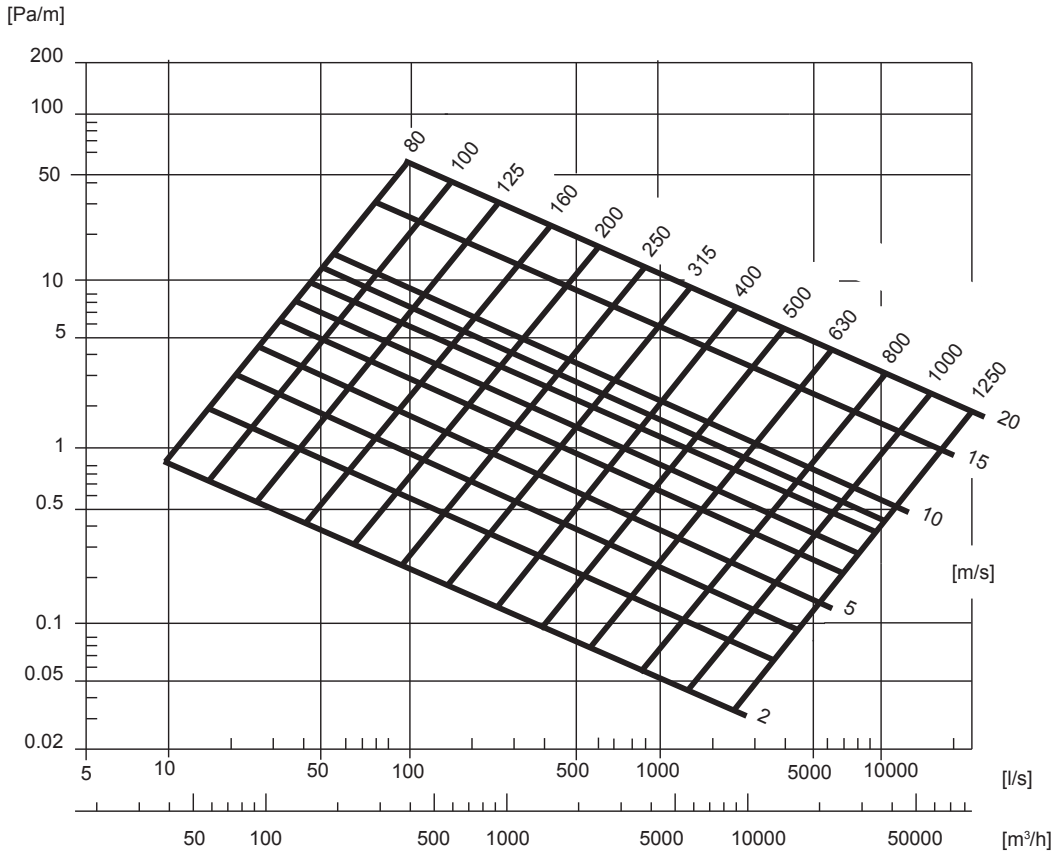

ALNOR® ventilation system
is a legally protected trademark and technical patent. All rights reserved.

Smoke extraction segmented bend

BSL-SMO-90



Description

BSL-SMO segmented male bend, fire resistance class:E_{600} 120 (h_o) S1500 single, designed for single-compartment smoke extraction systems and combined (dual-function) systems. The bend with a standard radius rm=d1 is equipped with GASK - double lip seals for ventilation fittings made of EPDM and a 1.8 mm thick and 10 mm wide intumescent seal. Welding points and other joints are covered with high-temperature sealant. SMOKE System fittings are available in diameters from 100 to 1000 mm.

Order example: BSL-SMO-200-90

Product code example:

Product code: **BSL-SMO - aaa - bbb**

type
diameter Ød$_1$
angle

Dimensions

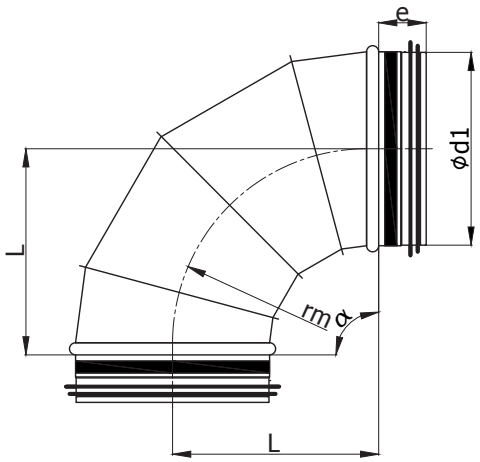

Diameter Ød$_1$ [mm]	L [mm]	Weight [kg]
100	100	0.54
125	125	0.74
140	140	0.88
150	150	0.99
160	160	1.10
180	180	1.33
200	200	1.59
224	224	1.94
250	250	2.33
280	280	2.84
300	300	3.28
315	315	3.58
355	355	4.42
400	400	5.48
450	450	7.09
500	500	8.56
560	560	10.66
600	600	12.12
630	630	13.21
710	710	17.29
800	800	27.78
900	900	34.46
1000	1000	42.77

ALNOR® ventilation system
is a legally protected trademark and technical patent. All rights reserved.

Smoke extraction segmented bend

BSL-SMO-90

Technical specification

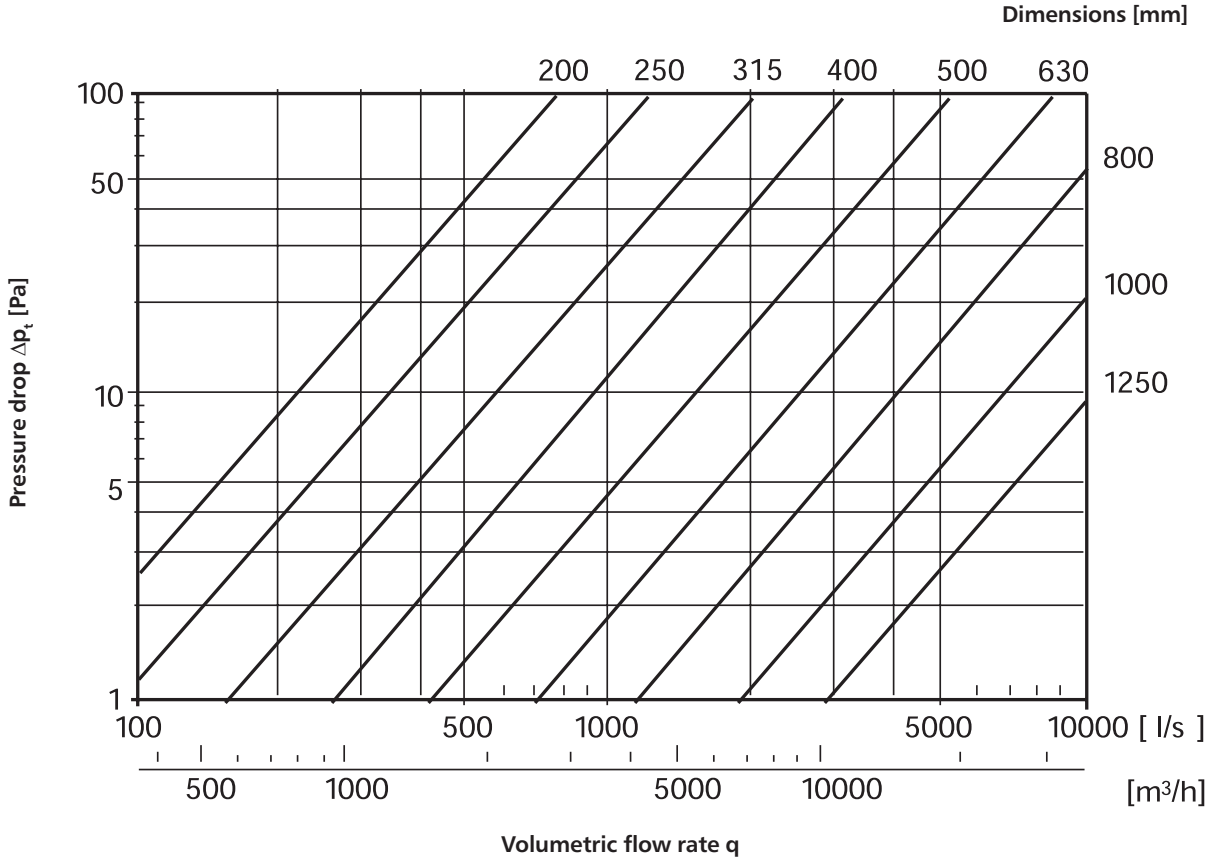

ALNOR® ventilation system
is a legally protected trademark and technical patent. All rights reserved.

Smoke extraction segmented bend

BSL-SMO-45



Description

BSL-SMO-45 segmented male bend, fire resistance class: E_{600} 120 (h_o) S1500 single, designed for single-compartment smoke extraction systems and combined (dual-function) systems. The bend with a standard radius rm=d1 is equipped with GASK double lip seals for ventilation fittings made of EPDM and a 1.8 mm thick and 10 mm wide intumescent seal. Welding points and other joints are covered with high-temperature sealant. SMOKE System fittings are available in diameters from 100 to 1000 mm.

Order example: BSL-SMO-300-45

Product code example:

Product code: **BSL-SMO - aaa - bbb**

type
diameter Ød$_1$
angle

Dimensions

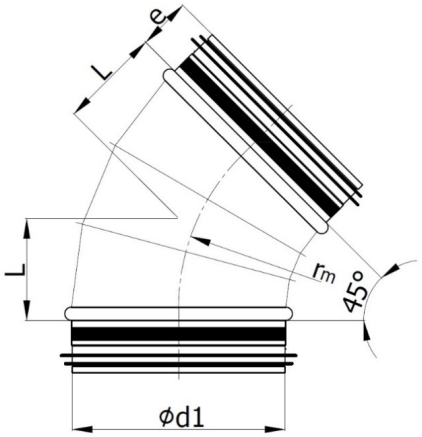

Diameter Ød$_1$ [mm]	L [mm]	Weight [kg]
100	41	0.39
125	52	0.53
140	56	0.62
150	62	0.68
160	66	0.75
180	75	0.89
200	83	1.05
224	93	1.25
250	104	1.48
280	116	1.77
300	124	2.03
315	130	2.20
355	145	2.67
400	162	3.25
450	186	4.27
500	204	5.09
560	232	6.25
600	249	7.04
630	261	7.63
710	294	10.14
800	331	15.95
900	373	19.54
1000	414	24.21

ALNOR® ventilation system
is a legally protected trademark and technical patent. All rights reserved.

Smoke extraction segmented bend

BSL-SMO-45

Technical data

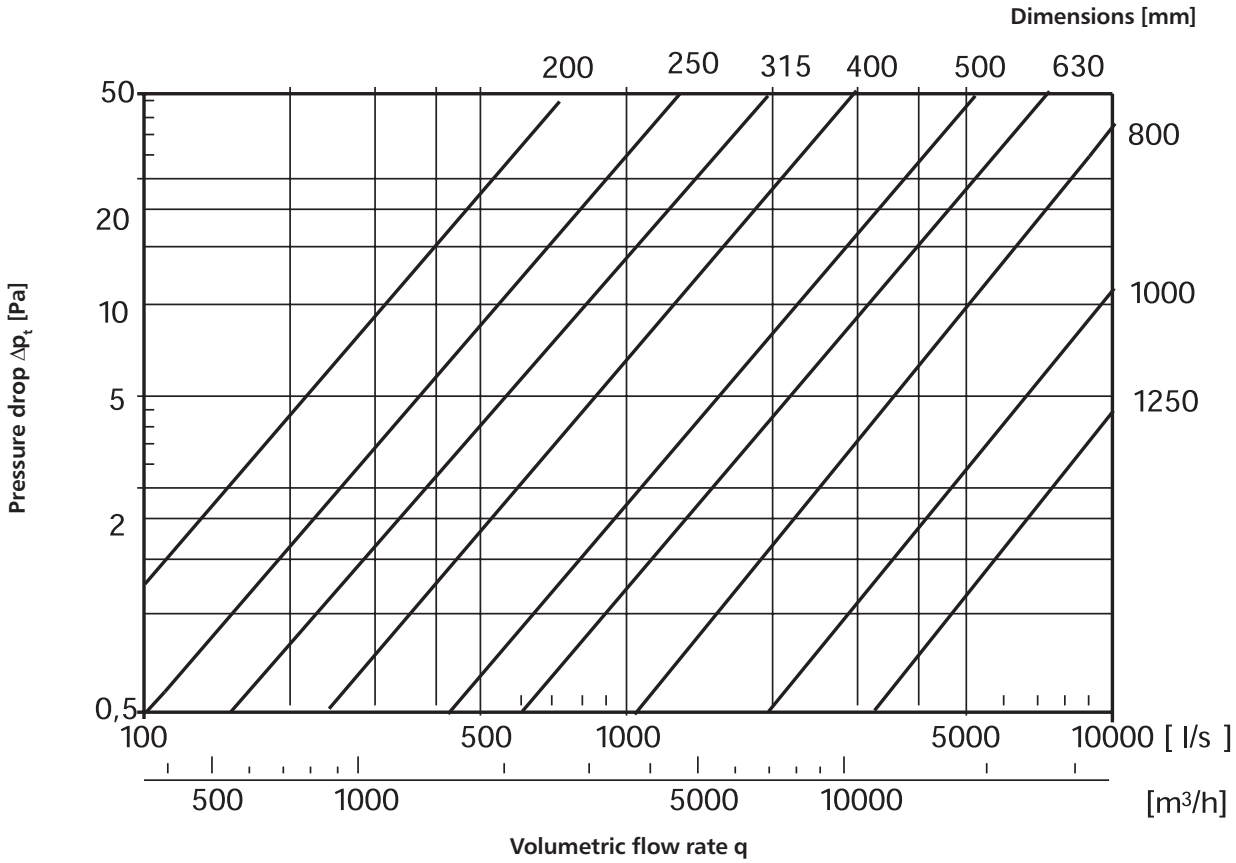

ALNOR® ventilation system
is a legally protected trademark and technical patent. All rights reserved.

Long smoke extraction segmented bend

BSDL-SMO-90



Description

BSDL-SMO-90 long segmented male bend, fire resistance class: E_{600} 120 (h_o) S1500 single, designed for single-compartment smoke extraction systems and combined (dual-function) systems. The bend with a standard radius rm=d1 is equipped with GASK double lip seals for ventilation fittings made of EPDM and a 1.8 mm thick and 10 mm wide intumescent seal. Welding points and other joints are covered with high-temperature sealant. SMOKE System fittings are available in diameters from 100 to 1000 mm.

Example order: BSDL-SMO-250-90

Product code example:

Product code: **BSDL-SMO - aaa - bbb**

type
diameter Ød$_1$
angle

Dimensions

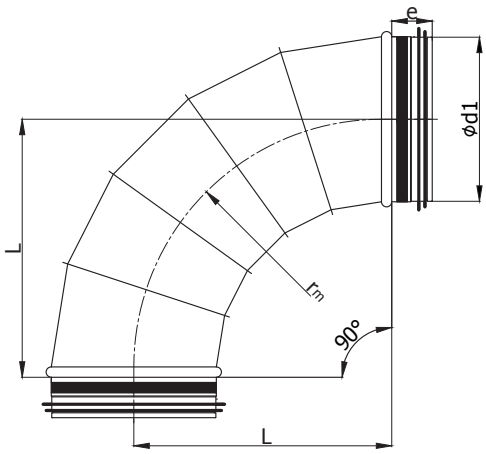

Diameter Ød$_1$ [mm]	L [mm]	Weight [kg]
100	150	0.693
125	187.5	0.10
140	210	1.20
150	225	1.35
160	240	1.50
180	270	1.84
200	300	2.21
224	336	2.70
250	375	3.27
280	420	4.01
300	450	4.63
315	472.5	5.06
355	532.5	6.28
400	600	7.81
450	675	10.01
500	750	12.14
560	840	15.29
600	900	17.42
630	945	19.01
710	1065	24.68
800	1200	39.54
900	1350	49.25
1000	1500	60.90

ALNOR® ventilation system
is a legally protected trademark and technical patent. All rights reserved.

Long smoke extraction segmented bend

BSDL-SMO-90

Technical data

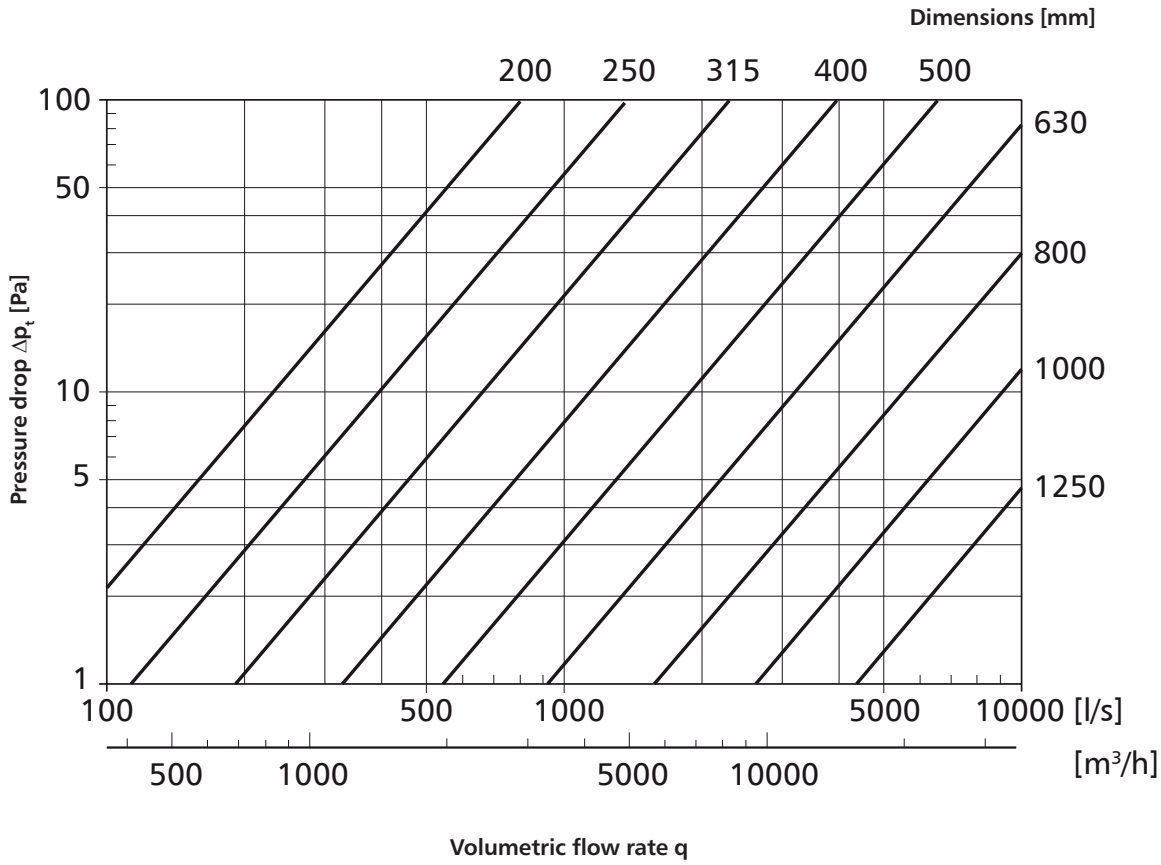

ALNOR® ventilation system
is a legally protected trademark and technical patent. All rights reserved.

Smoke extraction reducer

RSCLL-SMO/RSCLFL-SMO/RSLL-SMO/RSLFL-SMO



Description

Segmented male reducers, fire resistance class: E_{600} 120 (h_o) S1500 single, designed for single-compartment smoke extraction systems and combined (dual-function) systems. All male reducers are equipped with GASK double lip seals for ventilation fittings made of EPDM and a 1.8 mm thick and 10 mm wide intumescent seal. Welding points and other joints are covered with high-temperature sealant. SMOKE System fittings are available in diameters from 100 to 1000 mm.

Available materials – product code example:

RSCLL-SMO – galvanized steel, symmetrical reducer, male ends

RSCLFL–SMO – galvanized steel, symmetrical reducer, male and female end

RSLL–SMO – galvanized steel, asymmetrical reducer, male ends

RSLFL–SMO – galvanized steel, asymmetrical reducer, male and female end

Order example: RSCLL-SMO-200-100

Product code example:

Kod produktu: **RSCLL-SMO - aaa - bbb**

type

diameter Ød$_1$

diameter Ød$_2$

Dimensions

RSCLL

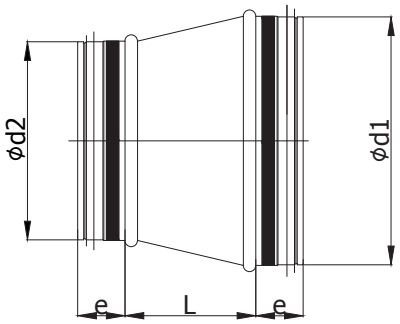

RSCLFL

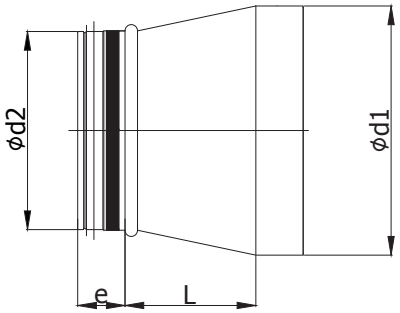

RSLL

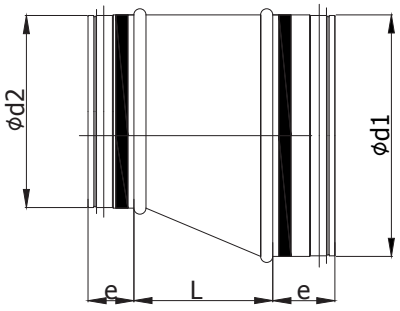

RSLFL

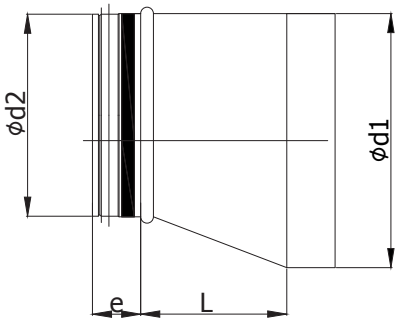

ALNOR® ventilation system
is a legally protected trademark and technical patent. All rights reserved.

Smoke extraction reducer

RSCLL-SMO/RSCLFL-SMO/RSLL-SMO/RSLFL-SMO

Dimensions

Ød$_1$ [mm]	Ød$_2$ [mm]	Sheet thickness t [mm]	L [mm]	Weight [kg]
125	100	0.7	52	0.39
140	100	0.7	69	0.45
	125	0.7	46	0.44
150	100	0.7	80	0.50
	125	0.7	51	0.47
	140	0.7	35	0.45
160	100	0.7	91	0.54
	125	0.7	63	0.52
	140	0.7	46	0.50
	150	0.7	35	0.49
180	100	0.7	113	0.64
	125	0.7	86	0.62
	140	0.7	69	0.60
	150	0.7	57	0.58
	160	0.7	47	0.57
200	100	0.7	135	0.75
	125	0.7	107	0.73
	140	0.7	90	0.71
	150	0.7	80	0.69
	160	0.7	69	0.68
	180	0.7	47	0.64
224	100	0.7	162	0.89
	125	0.7	134	0.87
	140	0.7	118	0.85
	150	0.7	106	0.83
	160	0.7	96	0.82
	180	0.7	73	0.78
	200	0.7	50	0.72
250	100	0.7	191	1.06
	125	0.7	163	1.04
	140	0.7	146	1.02
	150	0.7	135	1.00
	160	0.7	124	0.98
	180	0.7	102	0.94
	200	0.7	80	0.89
	224	0.7	53	0.82
280	125	0.7	196	1.25
	140	0.7	180	1.23
	150	0.7	169	1.21
	160	0.7	158	1.20
	180	0.7	135	1.15
	200	0.7	113	1.10
	224	0.7	87	1.03
	250	0.7	57	0.94

Ød$_1$ [mm]	Ød$_2$ [mm]	Sheet thickness t [mm]	L [mm]	Weight [kg]
300	100	0.7	245	1.44
	125	0.7	219	1.42
	140	0.7	203	1.41
	150	0.7	191	1.39
	160	0.7	180	1.37
	180	0.7	158	1.33
	200	0.7	135	1.27
	224	0.7	109	1.21
	250	0.7	80	1.12
	280	0.7	47	1.00
315	100	0.7	261	1.56
	125	0.7	235	1.54
	140	0.7	219	1.52
	150	0.7	208	1.51
	160	0.7	196	1.49
	180	0.7	175	1.45
	200	0.7	152	1.40
	224	0.7	125	1.32
	250	0.7	96	1.23
	280	0.7	63	1.11
	300	0.7	41	1.05
355	100	0.7	285	1.83
	125	0.7	280	1.89
	140	0.7	275	1.91
	150	0.7	268	1.92
	160	0.7	241	1.83
	180	0.7	219	1.79
	200	0.7	196	1.74
	224	0.7	170	1.67
	250	0.7	141	1.58
	280	0.7	108	1.46
	300	0.7	86	1.39
	315	0.7	69	1.32
400	100	0.7	345	2.28
	125	0.7	325	2.29
	140	0.7	310	2.28
	150	0.7	295	2.25
	160	0.7	295	2.28
	180	0.7	273	2.24
	200	0.7	226	2.07
	224	0.7	210	2.05
	250	0.7	175	1.92
	280	0.7	162	1.91
	300	0.7	139	1.83
	315	0.7	110	1.68
	355	0.7	71	1.50

ALNOR® ventilation system
is a legally protected trademark and technical patent. All rights reserved.

Smoke extraction reducer

RSCLL-SMO/RSCLFL-SMO/RSLL-SMO/RSLFL-SMO

Ød$_1$ [mm]	Ød$_2$ [mm]	Sheet thickness t [mm]	L [mm]	Weight [kg]
450	100	0.7	355	2.76
	125	0.7	335	2.76
	140	0.7	320	2.74
	150	0.7	305	2.71
	160	0.7	291	2.67
	180	0.7	283	2.69
	200	0.7	276	2.71
	224	0.7	258	2.68
	250	0.7	226	2.57
	280	0.7	210	2.54
	300	0.7	194	2.51
	315	0.7	160	2.32
	355	0.7	121	2.14
	400	0.7	79	1.90
500	100	0.7	443	3.52
	125	0.7	419	3.51
	140	0.7	408	3.52
	150	0.7	391	3.47
	160	0.7	369	3.40
	180	0.7	366	3.45
	200	0.7	362	3.50
	224	0.7	335	3.43
	250	0.7	276	3.16
	280	0.7	264	3.16
	300	0.7	251	3.15
	315	0.7	211	2.93
	355	0.7	170	2.72
	400	0.7	129	2.48
	450	0.7	79	2.31
560	250	0.7	377	4.15
	280	0.7	340	4.01
	300	0.7	317	3.93
	315	0.7	300	3.86
	355	0.7	257	3.65
	400	0.7	211	3.40
	450	0.7	154	3.17
	500	0.7	98	2.80
600	250	0.7	447	4.89
	280	0.7	404	4.71
	300	0.7	382	4.65
	315	0.7	365	4.57
	355	0.7	321	4.37
	400	0.7	275	4.12
	450	0.7	219	3.92
	500	0.7	164	3.57
	560	0.7	96	3.03

Ød$_1$ [mm]	Ød$_2$ [mm]	Sheet thickness t [mm]	L [mm]	Weight [kg]
630	250	0.7	451	5.14
	280	0.7	418	5.02
	300	0.7	395	4.95
	315	0.7	379	4.88
	355	0.7	334	4.66
	400	0.7	288	4.39
	450	0.7	232	4.19
	500	0.7	177	3.82
	560	0.7	110	3.28
	600	0.7	73	2.97
710	250	0.7	485	6.42
	280	0.7	470	6.42
	300	0.7	455	6.41
	315	0.7	445	6.38
	355	0.7	428	6.39
	400	0.7	381	6.11
	450	0.7	325	5.87
	500	0.7	269	5.53
	560	0.7	202	4.97
	600	0.7	159	4.60
	630	0.7	125	4.32
800	250	0.9	505	9.46
	280	0.9	500	9.56
	300	0.9	495	9.64
	315	0.9	492	9.68
	355	0.9	469	9.62
	400	0.9	447	9.57
	450	0.9	426	9.72
	500	0.9	386	9.47
	560	0.9	304	8.56
	600	0.9	259	8.04
	630	0.9	226	7.69
	710	0.9	140	6.91
900	400	0.9	563	12.22
	450	0.9	536	12.33
	500	0.9	480	11.86
	560	0.9	414	11.17
	600	0.9	370	10.66
	630	0.9	337	10.33
	710	0.9	251	9.53
	800	0.9	151	8.01

ALNOR® ventilation system
is a legally protected trademark and technical patent. All rights reserved.

Smoke extraction reducer

RSCLL-SMO/RSCLFL-SMO/RSLL-SMO/RSLFL-SMO

$Ød_1$ [mm]	$Ød_2$ [mm]	Sheet thickness t [mm]	L [mm]	Weight [kg]
1000	400	0.9	592	14.29
	450	0.9	592	14.77
	500	0.9	592	15.15
	560	0.9	525	14.44
	600	0.9	481	13.92
	630	0.9	447	13.46
	710	0.9	363	12.82
	800	0.9	263	11.27
	900	0.9	151	9.30

Technical data

Pressure loss charts

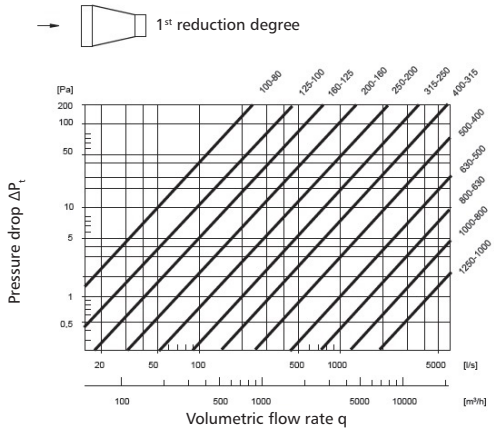

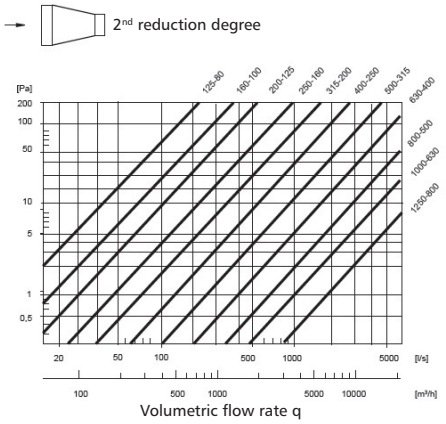

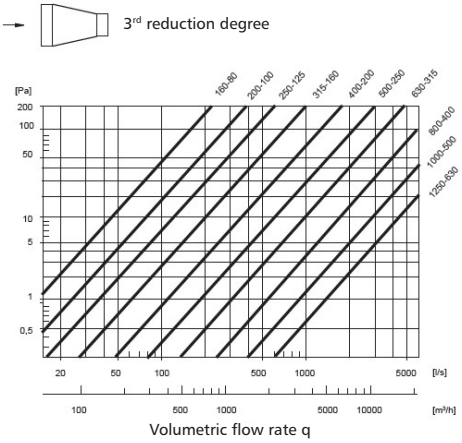

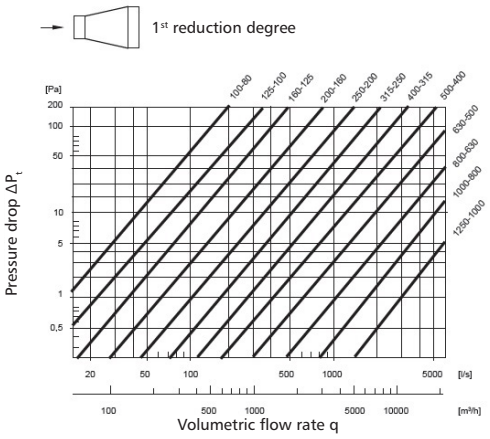

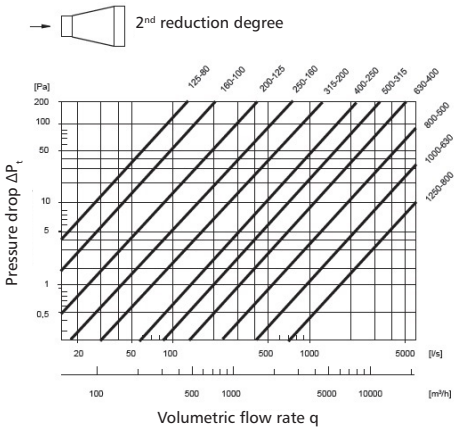

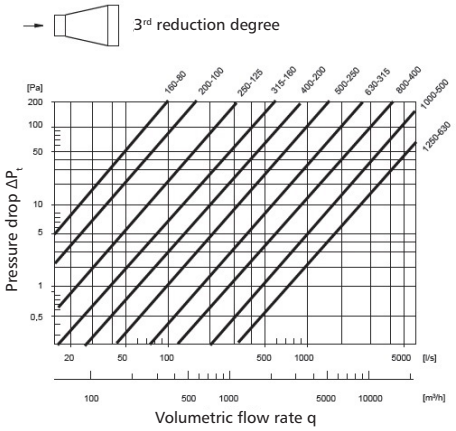

ALNOR® ventilation system
is a legally protected trademark and technical patent. All rights reserved.

Segmented T-piece for smoke extraction systems

TSCL-SMO / TSL-SMO



Description

TSCL-SMO / TSL-SMO segmented T-pieces, fire resistance class: E_{600} 120 (h_o) S1500 single, designed for single-compartment smoke extraction systems and combined (dual-function) systems. They are available in a symmetrical and asymmetrical version, they are equipped with GASK double lip seals for ventilation fittings made of EPDM and a 1.8 mm thick and 10 mm wide intumescent seal. Welding points and other joints are covered with high-temperature sealant. SMOKE System fittings are available in diameters from 100 to 1000 mm.

Available versions:
TSCL-SMO T-piece made of SSCL-SMO segmented symmetrical full saddle for spiral ducts.
TSL-SMO T-piece made of SSL-SMO.segmented asymmetrical full saddle for spiral ducts.

Order example: TSCL-SMO-200-100

Product code example
Product code: **TSCL-SMO - aaa - bbb**

type
Ød$_1$
Ød$_3$

Dimensions

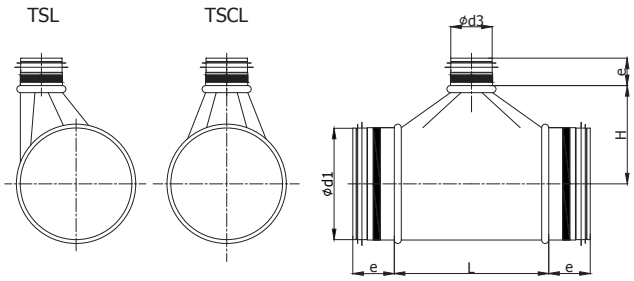

Ød$_{1\ nom}$ [mm]	Ød$_{3\ nom}$ [mm]	Sheet thickness t [mm]	L [mm]	H [mm]	Weight [kg]
100	100	0.7	190	95	0.85
	125	0.7	215	95	0.95
	140	0.7	240	100	1.04
	150	0.7	250	100	1.08
	160	0.7	260	100	1.12
125	100	0.7	190	110	1.03
	125	0.7	215	110	1.14
	140	0.7	240	115	1.24
	150	0.7	250	115	1.28
	160	0.7	260	115	1.32
	180	0.7	280	115	1.42
	200	0.7	330	130	1.64
140	100	0.7	190	115	1.11
	125	0.7	215	115	1.22
	140	0.7	240	120	1.33
	150	0.7	250	120	1.37
	160	0.7	260	120	1.41
	180	0.7	280	120	1.50
	200	0.7	330	135	1.74
	224	0.7	355	135	1.85
150	100	0.7	190	120	1.16
	125	0.7	215	120	1.28
	140	0.7	240	125	1.39
	150	0.7	250	125	1.43
	160	0.7	260	125	1.47
	180	0.7	280	125	1.57
	200	0.7	330	140	1.81
	224	0.7	355	140	1.93
	250	0.7	380	140	2.06

ALNOR® ventilation system
is a legally protected trademark and technical patent. All rights reserved.

Segmented T-piece for smoke extraction systems

TSCL-SMO / TSL-SMO

Ød$_{1\ nom}$ [mm]	Ød$_{3\ nom}$ [mm]	Sheet thickness t [mm]	L [mm]	H [mm]	Weight [kg]
160	100	0.7	190	125	1.22
	125	0.7	215	125	1.34
	140	0.7	240	130	1.45
	150	0.7	250	130	1.49
	160	0.7	260	130	1.54
	180	0.7	280	130	1.64
	200	0.7	330	145	1.88
	224	0.7	355	145	2.01
	250	0.7	380	145	2.14
180	100	0.7	190	135	1.35
	125	0.7	215	135	1.48
	140	0.7	240	140	1.60
	150	0.7	250	140	1.64
	160	0.7	260	140	1.69
	180	0.7	280	140	1.79
	200	0.7	330	155	2.05
	224	0.7	355	155	2.18
	250	0.7	380	155	2.32
	280	0.7	430	165	2.62
200	100	0.7	190	145	1.48
	125	0.7	215	145	1.61
	140	0.7	240	150	1.74
	150	0.7	250	150	1.79
	160	0.7	260	150	1.84
	180	0.7	280	150	1.95
	200	0.7	330	165	2.22
	224	0.7	355	165	2.36
	250	0.7	380	165	2.50
	280	0.7	430	175	2.81
	300	0.7	450	175	2.94
	315	0.7	465	175	3.03
224	100	0.7	190	160	1.66
	125	0.7	215	160	1.80
	140	0.7	240	165	1.94
	150	0.7	250	165	1.99
	160	0.7	260	165	2.04
	180	0.7	280	165	2.16
	200	0.7	330	180	2.45
	224	0.7	355	180	2.59
	250	0.7	380	180	2.75
	280	0.7	430	190	3.08
	300	0.7	450	190	3.21
	315	0.7	465	190	3.31
	355	0.7	525	200	3.72

Ød$_{1\ nom}$ [mm]	Ød$_{3\ nom}$ [mm]	Sheet thickness t [mm]	L [mm]	H [mm]	Weight [kg]
250	100	0.7	190	170	1.78
	125	0.7	215	170	1.93
	140	0.7	240	175	2.08
	150	0.7	250	175	2.13
	160	0.7	260	175	2.19
	180	0.7	280	175	2.31
	200	0.7	330	190	2.62
	224	0.7	355	190	2.77
	250	0.7	380	190	2.93
	280	0.7	430	200	3.28
	300	0.7	450	200	3.41
	315	0.7	465	200	3.51
	355	0.7	525	210	3.94
	400	0.7	570	210	4.27
280	100	0.7	190	185	1.97
	125	0.7	215	185	2.13
	140	0.7	240	190	2.29
	150	0.7	250	190	2.35
	160	0.7	260	190	2.41
	180	0.7	280	190	2.54
	200	0.7	330	205	2.88
	224	0.7	355	205	3.03
	250	0.7	380	205	3.20
	280	0.7	430	215	3.57
	300	0.7	450	215	3.71
	315	0.7	465	215	3.82
	355	0.7	525	225	4.27
	400	0.7	570	225	4.61
	450	0.7	620	225	5.16
300	100	0.7	190	195	2.10
	125	0.7	215	195	2.27
	140	0.7	240	200	2.44
	150	0.7	250	200	2.50
	160	0.7	260	200	2.56
	180	0.7	280	200	2.70
	200	0.7	330	215	3.05
	224	0.7	355	215	3.21
	250	0.7	380	215	3.39
	280	0.7	430	225	3.77
	300	0.7	450	225	3.92
	315	0.7	465	225	4.03
	355	0.7	525	235	4.49
	400	0.7	570	235	4.84
	450	0.7	620	235	5.40

ALNOR® ventilation system
is a legally protected trademark and technical patent. All rights reserved.

Segmented T-piece for smoke extraction systems

TSCL-SMO / TSL-SMO

Ød$_{1\ nom}$ [mm]	Ød$_{3\ nom}$ [mm]	Sheet thickness t [mm]	L [mm]	H [mm]	Waga [kg]
315	100	0.7	190	205	2.23
	125	0.7	215	205	2.41
	140	0.7	240	210	2.58
	150	0.7	250	210	2.64
	160	0.7	260	210	2.71
	180	0.7	280	210	2.85
	200	0.7	330	225	3.22
	224	0.7	355	225	3.38
	250	0.7	380	225	3.56
	280	0.7	430	235	3.96
	300	0.7	450	235	4.11
	315	0.7	465	235	4.22
	355	0.7	525	245	4.70
	400	0.7	570	245	5.06
	450	0.7	620	245	5.63
	500	0.7	680	250	6.16
355	100	0.7	190	225	2.48
	125	0.7	215	225	2.67
	140	0.7	240	230	2.86
	150	0.7	250	230	2.93
	160	0.7	260	230	3.00
	180	0.7	280	230	3.15
	200	0.7	330	245	3.55
	224	0.7	355	245	3.73
	250	0.7	380	245	3.93
	280	0.7	430	245	4.17
	300	0.7	450	255	4.51
	315	0.7	465	255	4.63
	355	0.7	525	265	5.15
	400	0.7	570	265	5.52
	450	0.7	620	265	6.11
	500	0.7	680	270	6.67
	560	0.7	740	270	7.24

Ød$_{1\ nom}$ [mm]	Ød$_{3\ nom}$ [mm]	Sheet thickness t [mm]	L [mm]	H [mm]	Weight [kg]
400	100	0.7	190	245	2.77
	125	0.7	215	245	2.98
	140	0.7	240	250	3.18
	150	0.7	250	250	3.26
	160	0.7	260	250	3.34
	180	0.7	280	250	3.50
	200	0.7	330	265	3.94
	224	0.7	355	265	4.13
	250	0.7	380	265	4.34
	280	0.7	430	275	4.80
	300	0.7	450	275	4.97
	315	0.7	465	275	5.10
	355	0.7	525	285	5.64
	400	0.7	570	285	6.04
	450	0.7	620	285	6.65
	500	0.7	680	290	7.24
	560	0.7	740	290	7.83
	600	0.7	780	290	8.24
	630	0.7	810	290	8.55
450	100	0.7	190	270	3.41
	125	0.7	215	270	3.65
	140	0.7	240	275	3.87
	150	0.7	250	275	3.96
	160	0.7	260	275	4.04
	180	0.7	280	275	4.23
	200	0.7	330	290	4.70
	224	0.7	355	290	4.91
	250	0.7	380	290	5.14
	280	0.7	430	300	5.63
	300	0.7	450	300	5.82
	315	0.7	465	300	5.95
	355	0.7	525	310	6.54
	400	0.7	570	310	6.97
	450	0.7	620	310	7.61
	500	0.7	680	315	8.23
	560	0.7	740	315	8.85
	600	0.7	780	315	9.28
	630	0.7	810	315	9.60
	710	0.7	890	315	10.86

ALNOR® ventilation system
is a legally protected trademark and technical patent. All rights reserved.

Segmented T-piece for smoke extraction systems

TSCL-SMO / TSL-SMO

Ød$_{1\ nom}$ [mm]	Ød$_{3\ nom}$ [mm]	Sheet thickness t [mm]	L [mm]	H [mm]	Weight [kg]
500	100	0.7	190	300	3.76
	125	0.7	215	300	4.02
	140	0.7	240	305	4.26
	150	0.7	250	305	4.36
	160	0.7	260	305	4.45
	180	0.7	280	305	4.65
	200	0.7	330	320	5.16
	224	0.7	355	320	5.39
	250	0.7	380	320	5.64
	280	0.7	430	330	6.17
	300	0.7	450	330	6.37
	315	0.7	465	330	6.52
	355	0.7	525	340	7.15
	400	0.7	570	340	7.60
	450	0.7	620	340	7.66
	500	0.7	680	345	8.93
	560	0.7	740	345	9.59
	600	0.7	780	345	10.03
	630	0.7	810	345	10.37
	710	0.7	890	345	11.66
	800	0.9	980	345	15.97
560	200	0.7	330	345	5.72
	224	0.7	355	345	5.98
	250	0.7	380	345	6.25
	280	0.7	430	355	6.81
	300	0.7	450	355	7.03
	315	0.7	465	355	7.19
	355	0.7	525	365	7.87
	400	0.7	570	365	8.36
	450	0.7	620	365	9.09
	500	0.7	680	370	9.80
	560	0.7	740	370	10.49
	600	0.7	780	370	10.96
	630	0.7	810	370	11.32
	710	0.7	890	370	12.66
	800	0.9	980	370	17.25
	900	0.9	1080	370	19.19

Ød$_{1\ nom}$ [mm]	Ød$_{3\ nom}$ [mm]	Sheet thickness t [mm]	L [mm]	H [mm]	Weight [kg]
600	200	0.7	330	365	6.60
	224	0.7	355	365	6.88
	250	0.7	380	365	7.18
	280	0.7	430	375	7.53
	300	0.7	450	375	7.77
	315	0.7	465	375	7.94
	355	0.7	525	385	8.39
	400	0.7	570	385	8.91
	450	0.7	620	385	9.64
	500	0.7	680	390	10.38
	560	0.7	740	390	11.11
	600	0.7	780	390	12.79
	630	0.7	810	390	16.93
	710	0.7	890	390	19.14
	800	0.9	980	390	21.43
	900	0.9	1080	390	13.14
	1000	0.9	1180	390	13.97
630	200	0.7	330	380	6.39
	224	0.7	355	380	6.67
	250	0.7	380	380	6.97
	280	0.7	430	390	7.60
	300	0.7	450	390	7.84
	315	0.7	465	390	8.02
	355	0.7	525	400	8.77
	400	0.7	570	400	9.30
	450	0.7	620	400	10.06
	500	0.7	680	405	10.82
	560	0.7	740	405	10.35
	600	0.7	780	405	12.07
	630	0.7	810	405	12.45
	710	0.7	890	405	13.85
	800	0.9	980	405	18.79
	900	0.9	1080	405	20.83
	1000	0.9	1180	405	22.96

ALNOR® ventilation system
is a legally protected trademark and technical patent. All rights reserved.

Segmented T-piece for smoke extraction systems

TSCL-SMO / TSL-SMO

Ød$_{1\ nom}$ [mm]	Ød$_{3\ nom}$ [mm]	Sheet thickness t [mm]	L [mm]	H [mm]	Weight [kg]
710	250	0.7	380	420	8.53
	280	0.7	430	420	8.93
	300	0.7	450	430	9.48
	315	0.7	465	430	9.68
	355	0.7	525	440	10.50
	400	0.7	570	440	11.09
	450	0.7	620	440	11.90
	500	0.7	680	445	12.73
	560	0.7	740	445	13.54
	600	0.7	780	445	14.08
	630	0.7	810	445	14.49
	710	0.7	890	445	15.96
	800	0.9	980	445	21.32
	900	0.9	1080	445	23.48
	1000	0.9	1180	445	25.72
800	250	0.9	380	465	12.18
	280	0.9	430	475	13.16
	300	0.9	450	475	13.53
	315	0.9	465	475	13.80
	355	0.9	525	485	14.95
	400	0.9	570	485	15.76
	450	0.9	620	485	16.83
	500	0.9	680	490	17.97
	560	0.9	740	490	19.07
	600	0.9	780	490	19.81
	630	0.9	810	490	20.37
	710	0.9	890	490	22.23
	800	0.9	980	490	24.48
	900	0.9	1080	490	26.78
	1000	0.9	1180	490	29.13
	710	0.7	890	405	13.85
	800	0.9	980	405	18.79
	900	0.9	1080	405	20.83
	1000	0.9	1180	405	22.96

Ød$_{1\ nom}$ [mm]	Ød$_{3\ nom}$ [mm]	Sheet thickness t [mm]	L [mm]	H [mm]	Weight [kg]
900	315	0.9	465	525	15.45
	355	0.9	525	535	16.73
	400	0.9	570	535	17.63
	450	0.9	620	535	18.79
	500	0.9	680	540	20.05
	560	0.9	740	540	21.26
	600	0.9	780	540	22.07
	630	0.9	810	540	22.67
	710	0.9	890	540	24.66
	800	0.9	980	540	27.06
	900	0.9	1080	540	29.53
	1000	0.9	1180	540	32.02
1000	315	0.9	465	575	17.57
	355	0.9	525	585	18.97
	400	0.9	570	585	19.97
	450	0.9	620	585	21.22
	500	0.9	680	590	22.60
	560	0.9	740	590	23.92
	600	0.9	780	590	24.80
	630	0.9	810	590	25.46
	710	0.9	890	590	27.59
	800	0.9	980	590	30.13
	900	0.9	1080	590	32.79
	1000	0.9	1180	590	35.40
	600	0.9	780	490	19.81
	630	0.9	810	490	20.37
	710	0.9	890	490	22.23
	800	0.9	980	490	24.48
	900	0.9	1080	490	26.78
	1000	0.9	1180	490	29.13

ALNOR® ventilation system
is a legally protected trademark and technical patent. All rights reserved.

Pressed T-piece for smoke extraction systems

TPCL-SMO



Description

TPCL-SMO equal pressed T-piece, fire resistance class: E_{600} 120 (h_o) S1500 single, designed for single-compartment smoke extraction systems and combined (dual-function) systems. It is equipped with GASK double lip seals for ventilation fittings made of EPDM and a 1.8 mm thick and 10 mm wide intumescent seal. Welding points and other joints are covered with high-temperature sealant. SMOKE System fittings are available in diameters from 100 to 1000 mm.
TPCL-SMO equal pressed T-piece made of a SPSL-SMO short segmented saddle for ducts.

Order example: TPCL-SMO-200-100

Product code example

Product code: **TPCL-SMO - aaa - bbb**

type
Ød$_1$
Ød$_3$

Dimensions

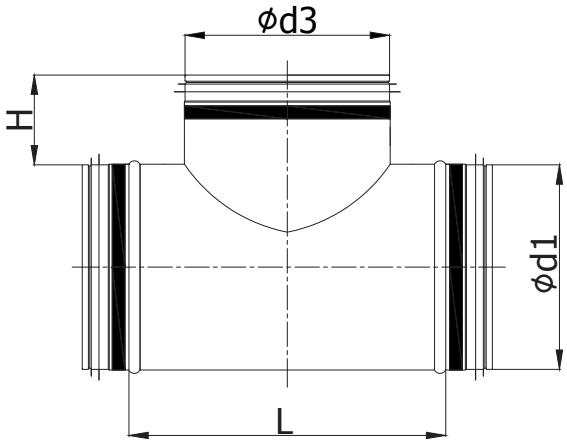

Ød$_{1\ nom}$ [mm]	Ød$_{3\ nom}$ [mm]	Sheet thickness t [mm]	L [mm]	H [mm]	Weight [kg]
100	100	0.7	150	80	0.61
125	100	0.7	150	80	0.72
	125	0.7	185	80	0.84
140	100	0.7	150	80	0.79
	125	0.7	185	80	0.87
	140	0.7	200	80	0.97
150	100	0.7	150	80	0.84
	125	0.7	185	80	0.96
	140	0.7	200	80	1.02
	150	0.7	210	80	1.06
160	100	0.7	150	80	0.89
	125	0.7	185	80	1.01
	140	0.7	200	80	1.07
	150	0.7	210	80	1.11
	160	0.7	220	80	1.14
180	100	0.7	160	80	1.01
	125	0.7	185	80	1.12
	140	0.7	200	80	1.18
	150	0.7	210	80	1.22
	160	0.7	220	80	1.26
	180	0.7	240	80	1.35
200	100	0.7	160	80	1.11
	125	0.7	185	80	1.22
	140	0.7	200	80	1.29
	150	0.7	210	80	1.33
	160	0.7	220	80	1.35
	180	0.7	240	80	1.47
	200	0.7	270	80	1.60

ALNOR® ventilation system
is a legally protected trademark and technical patent. All rights reserved.

Pressed T-piece for smoke extraction systems

TPCL-SMO

Ød$_{1\ nom}$ [mm]	Ød$_{3\ nom}$ [mm]	Sheet thickness t [mm]	L [mm]	H [mm]	Weight [kg]
224	100	0.7	160	80	1.22
	125	0.7	185	80	1.35
	140	0.7	200	80	1.42
	150	0.7	210	80	1.47
	160	0.7	220	80	1.52
	180	0.7	240	80	1.61
	200	0.7	270	80	1.75
	224	0.7	290	80	1.86
250	100	0.7	160	80	1.35
	125	0.7	185	80	1.48
	140	0.7	200	80	1.56
	150	0.7	210	80	1.61
	160	0.7	220	80	1.66
	180	0.7	240	80	1.77
	200	0.7	270	80	1.91
	224	0.7	290	80	2.02
	250	0.7	320	80	2.18
280	100	0.7	160	80	1.49
	125	0.7	185	80	1.64
	140	0.7	200	80	1.72
	150	0.7	210	80	1.78
	160	0.7	220	80	1.84
	180	0.7	240	80	1.95
	200	0.7	270	80	2.11
	224	0.7	290	80	2.22
	250	0.7	320	80	2.39
	280	0.7	340	80	2.52
300	100	0.7	160	80	1.59
	125	0.7	185	80	1.72
	140	0.7	200	80	1.83
	150	0.7	210	80	1.89
	160	0.7	220	80	1.95
	180	0.7	240	80	2.07
	200	0.7	270	80	2.24
	224	0.7	290	80	2.36
	250	0.7	320	80	2.54
	280	0.7	340	80	2.66
	300	0.7	370	80	2.84

Ød$_{1\ nom}$ [mm]	Ød$_{3\ nom}$ [mm]	Sheet thickness t [mm]	L [mm]	H [mm]	Weight [kg]
315	100	0.7	160	80	1.66
	125	0.7	185	80	1.82
	140	0.7	200	80	1.92
	150	0.7	210	80	1.98
	160	0.7	220	80	2.04
	180	0.7	240	80	2.16
	200	0.7	270	80	2.34
	224	0.7	290	80	2.46
	250	0.7	320	80	2.64
	280	0.7	340	80	2.77
	300	0.7	370	80	2.95
	315	0.7	385	80	3.05
355	100	0.7	160	80	1.86
	125	0.7	185	80	2.03
	140	0.7	200	80	2.14
	150	0.7	210	80	2.21
	160	0.7	220	80	2.27
	180	0.7	240	80	2.41
	200	0.7	270	80	2.61
	224	0.7	290	80	2.74
	250	0.7	320	80	2.94
	280	0.7	340	80	3.08
	300	0.7	370	80	3.27
	315	0.7	385	80	3.37
	355	0.7	425	80	3.65
400	100	0.7	160	80	2.08
	125	0.7	185	80	2.27
	140	0.7	200	80	2.39
	150	0.7	210	80	2.46
	160	0.7	220	80	2.54
	180	0.7	240	80	2.69
	200	0.7	270	80	2.91
	224	0.7	290	80	3.05
	250	0.7	320	80	3.27
	280	0.7	340	80	3.42
	300	0.7	370	80	3.64
	315	0.7	385	80	3.75
	355	0.7	425	80	4.04
	400	0.7	480	80	4.45

ALNOR® ventilation system
is a legally protected trademark and technical patent. All rights reserved.

Pressed T-piece for smoke extraction systems

TPCL-SMO

Ød$_{1\ nom}$ [mm]	Ød$_{3\ nom}$ [mm]	Sheet thickness t[mm]	L [mm]	H [mm]	Weight [kg]
450	100	0.7	160	80	2.63
	125	0.7	185	80	2.84
	140	0.7	200	80	2.97
	150	0.7	210	80	3.06
	160	0.7	220	80	3.14
	180	0.7	240	80	3.31
	200	0.7	270	80	3.55
	224	0.7	290	80	3.71
	250	0.7	320	80	3.95
	280	0.7	340	80	4.12
	300	0.7	370	80	4.35
	315	0.7	385	80	4.33
	355	0.7	425	80	4.79
	400	0.7	500	80	5.39
	450	0.7	530	80	5.62
500	100	0.7	160	80	2.91
	125	0.7	185	80	3.14
	140	0.7	200	80	3.28
	150	0.7	210	80	3.38
	160	0.7	220	80	3.47
	180	0.7	240	80	3.65
	200	0.7	270	80	3.92
	224	0.7	290	80	4.10
	250	0.7	320	80	4.36
	280	0.7	340	80	4.54
	300	0.7	370	80	4.80
	315	0.7	385	80	4.93
	355	0.7	425	80	5.28
	400	0.7	500	80	5.93
	450	0.7	530	80	6.19
	500	0.7	580	80	6.65
560	200	0.7	270	80	4.20
	224	0.7	290	80	4.56
	250	0.7	320	80	4.86
	280	0.7	340	80	5.05
	300	0.7	370	80	5.34
	315	0.7	385	80	5.49
	355	0.7	425	80	5.87
	400	0.7	500	80	6.41
	450	0.7	530	80	6.87
	500	0.7	580	80	7.35
	560	0.7	640	80	7.95

Ød$_{1\ nom}$ [mm]	Ød$_{3\ nom}$ [mm]	Sheet thickness t [mm]	L [mm]	H [mm]	Weight [kg]
600	200	0.7	270	80	4.57
	224	0.7	290	80	4.88
	250	0.7	320	80	5.20
	280	0.7	340	80	5.41
	300	0.7	370	80	5.72
	315	0.7	385	80	5.69
	355	0.7	425	80	6.09
	400	0.7	500	80	6.85
	450	0.7	530	80	7.14
	500	0.7	580	80	7.64
	560	0.7	640	80	8.25
	600	0.7	680	80	8.26
630	200	0.7	270	80	4.10
	224	0.7	290	80	5.11
	250	0.7	320	80	5.44
	280	0.7	340	80	5.65
	300	0.7	370	80	5.98
	315	0.7	385	80	6.14
	355	0.7	425	80	6.37
	400	0.7	500	80	7.39
	450	0.7	530	80	8.40
	500	0.7	580	80	8.20
	560	0.7	640	80	8.84
	600	0.7	680	80	9.27
	630	0.7	720	80	9.70
710	250	0.7	320	80	6.71
	280	0.7	350	80	7.07
	300	0.7	370	80	7.32
	315	0.7	385	80	7.50
	355	0.7	425	80	7.97
	400	0.7	470	80	8.50
	450	0.7	520	80	9.09
	500	0.7	570	80	9.70
	560	0.7	630	80	10.37
	600	0.7	670	80	10.84
	630	0.7	700	80	11.19
	710	0.7	800	110	12.73

ALNOR® ventilation system
is a legally protected trademark and technical patent. All rights reserved.

Pressed T-piece for smoke extraction systems

TPCL-SMO

Ød1 nom [mm]	Ød3 nom [mm]	Sheet thickness t [mm]	L [mm]	H [mm]	Weight [kg]
800	250	0.9	320	80	9.68
	280	0.9	350	80	9.68
	300	0.9	370	80	10.56
	315	0.9	385	80	10.82
	355	0.9	425	80	11.51
	400	0.9	470	80	12.27
	450	0.9	520	80	13.11
	500	0.9	570	80	13.95
	560	0.9	630	80	14.94
	600	0.9	670	80	15.61
	630	0.9	700	80	16.10
	710	0.9	800	110	18.26
	800	0.9	900	110	20.03
900	315	0.9	385	80	12.14
	355	0.9	425	80	12.91
	400	0.9	470	80	13.77
	450	0.9	520	80	14.71
	500	0.9	570	80	15.65
	560	0.9	630	80	16.76
	600	0.9	670	80	17.49
	630	0.9	700	80	18.05
	710	0.9	800	110	20.39
	800	0.9	900	110	22.31
	900	0.9	1000	110	24.29
1000	315	0.9	385	80	14.12
	355	0.9	425	80	14.98
	400	0.9	470	80	15.93
	450	0.9	520	80	16.98
	500	0.9	570	80	18.02
	560	0.9	630	80	19.25
	600	0.9	670	80	20.06
	630	0.9	700	80	20.67
	710	0.9	800	110	23.20
	800	0.9	900	110	25.30
	900	0.9	1000	110	27.40
	1000	0.9	1100	130	30.01

Technical data

Pressure loss charts for T-pieces:

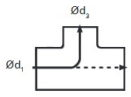

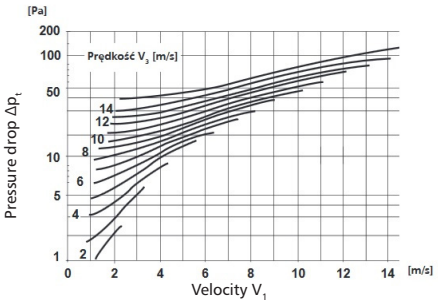

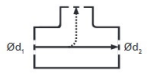

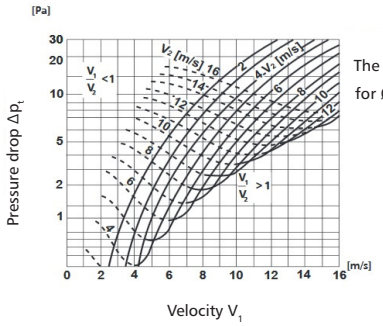

The chart is valid for Ød2 reducer.

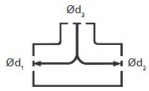

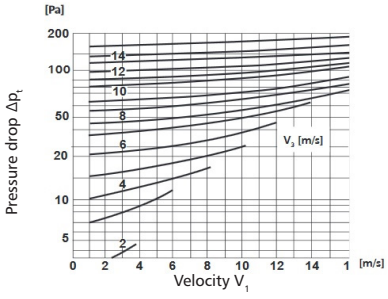

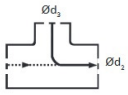

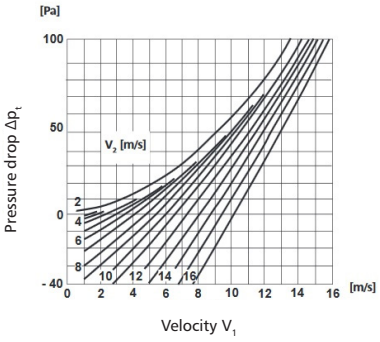

ALNOR® ventilation system
is a legally protected trademark and technical patent. All rights reserved.

Pressed T-piece for smoke extraction systems

TPCL-SMO

Pressure loss charts for T-pieces:

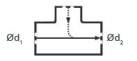

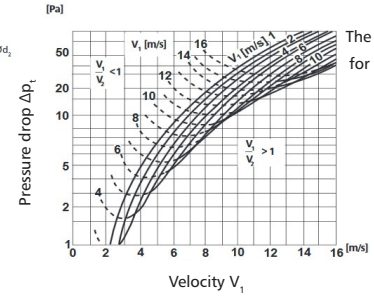

The chart is valid for $Ød_1$ reducer.

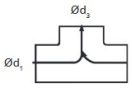

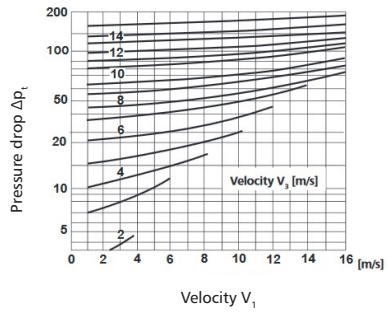

V_1 – average velocity in d_1
V_2 – average velocity in d_2
V_3 – average velocity in d_3

ALNOR® ventilation system
is a legally protected trademark and technical patent. All rights reserved.

Y-piece for smoke extraction systems

YSVL-SMO



Description

YSVL-SMO symmetrical Y-piece, fire resistance class: E_{600} 120 (h_o) S1500 single, designed for single-compartment smoke extraction systems and combined (dual-function) systems. Its design enables even air distribution. It is equipped with GASK double lip seals for ventilation fittings made of EPDM and a 1.8 mm thick and 10 mm wide intumescent seal. Welding points and other joints are covered with high-temperature sealant. SMOKE System fittings are available in diameters from 100 to 1000 mm.

Order example: YSVL-SMO-600-400-400

Product code example

Product code: **YSVL-SMO - aaa - bbb - ccc**

type
Ød$_1$
Ød$_3$
Ød$_4$

Dimensions

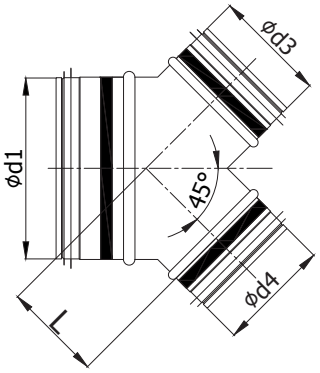

Ød$_{1\ nom}$ [mm]	Ød$_{3\ nom}$ [mm]	Ød$_{4\ nom}$ [mm]	Sheet thickness t [mm]	L [mm]	Weight [kg]
100	100	100	0.7	80	0.56
125	100	100	0.7	170	1.00
	125	125	0.7	90	0.73
140	100	100	0.7	185	1.08
	125	125	0.7	185	1.18
	140	140	0.7	100	0.84
150	100	100	0.7	190	1.17
	125	125	0.7	190	1.27
	140	140	0.7	190	1.33
	150	150	0.7	110	0.96
160	100	100	0.7	205	1.25
	125	125	0.7	205	1.38
	140	140	0.7	205	1.43
	150	150	0.7	205	1.46
	160	160	0.7	115	1.04
180	100	100	0.7	215	1.40
	125	125	0.7	215	1.52
	140	140	0.7	215	1.57
	150	150	0.7	215	1.61
	160	160	0.7	215	1.62
	180	180	0.7	125	1.21
200	100	100	0.7	230	1.57
	125	125	0.7	230	1.69
	140	140	0.7	230	1.75
	150	150	0.7	230	1.78
	160	160	0.7	230	1.81
	180	180	0.7	230	1.88
	200	200	0.7	135	1.39

ALNOR® ventilation system
is a legally protected trademark and technical patent. All rights reserved.

Y-piece for smoke extraction systems

YSVL-SMO

Ød$_{1\ nom}$ [mm]	Ød$_{3\ nom}$ [mm]	Ød$_{4\ nom}$ [mm]	Sheet thickness t [mm]	L [mm]	Weight [kg]
224	100	100	0.7	250	1.76
	125	125	0.7	250	1.89
	140	140	0.7	250	1.95
	150	150	0.7	250	1.98
	160	160	0.7	250	2.01
	180	180	0.7	250	2.08
	200	200	0.7	250	2.14
	224	224	0.7	150	1.61
250	100	100	0.7	280	2.08
	125	125	0.7	280	2.22
	140	140	0.7	280	2.26
	150	150	0.7	280	2.30
	160	160	0.7	280	2.32
	180	180	0.7	280	2.44
	200	200	0.7	280	2.51
	224	224	0.7	280	2.57
	250	250	0.7	165	1.93
280	140	140	0.7	310	2.63
	150	150	0.7	310	2.67
	160	160	0.7	310	2.70
	180	180	0.7	310	2.79
	200	200	0.7	310	2.87
	224	224	0.7	310	2.95
	250	250	0.7	310	2.99
	280	280	0.7	180	2.25
300	150	150	0.7	320	2.87
	160	160	0.7	320	2.94
	180	180	0.7	320	3.02
	200	200	0.7	320	3.10
	224	224	0.7	320	3.19
	250	250	0.7	320	3.24
	280	280	0.7	320	3.33
	300	300	0.7	195	2.56
315	160	160	0.7	335	3.13
	180	180	0.7	335	3.23
	200	200	0.7	335	3.31
	224	224	0.7	335	3.40
	250	250	0.7	335	3.47
	280	280	0.7	335	3.56
	300	300	0.7	335	3.59
	315	315	0.7	207	2.82

Ød$_{1\ nom}$ [mm]	Ød$_{3\ nom}$ [mm]	Ød$_{4\ nom}$ [mm]	Sheet thickness t [mm]	L [mm]	Weight [kg]
355	180	180	0.7	365	3.73
	200	200	0.7	365	3.83
	224	224	0.7	365	3.92
	250	250	0.7	365	4.02
	280	280	0.7	365	4.14
	300	300	0.7	365	4.17
	315	315	0.7	365	4.19
	355	355	0.7	230	3.33
400	200	200	0.7	410	4.52
	224	224	0.7	410	4.62
	250	250	0.7	410	4.71
	280	280	0.7	410	4.82
	300	300	0.7	410	4.89
	315	315	0.7	410	4.47
	355	355	0.7	410	5.09
	400	400	0.7	260	4.15
450	224	224	0.7	440	5.56
	250	250	0.7	440	5.66
	280	280	0.7	440	5.82
	300	300	0.7	440	5.89
	315	315	0.7	440	5.94
	355	355	0.7	440	6.01
	400	400	0.7	440	6.07
	450	450	0.7	285	5.38
500	250	250	0.7	490	6.66
	280	280	0.7	490	6.83
	300	300	0.7	490	6.92
	315	315	0.7	490	6.99
	355	355	0.7	490	7.09
	400	400	0.7	490	7.20
	450	450	0.7	490	7.54
	500	500	0.7	310	6.24
560	280	280	0.7	550	8.14
	300	300	0.7	550	8.26
	315	315	0.7	550	8.34
	355	355	0.7	550	8.50
	400	400	0.7	550	8.64
	450	450	0.7	550	9.07
	500	500	0.7	550	9.10
	560	560	0.7	350	7.64

ALNOR® ventilation system
is a legally protected trademark and technical patent. All rights reserved.

Y-piece for smoke extraction systems

YSVL-SMO

$Ød_{1\ nom}$ [mm]	$Ød_{3\ nom}$ [mm]	$Ød_{4\ nom}$ [mm]	Sheet thickness t [mm]	L [mm]	Weight [kg]
600	300	300	0.7	580	9.10
	315	315	0.7	580	9.20
	355	355	0.7	580	9.37
	400	400	0.7	580	9.51
	450	450	0.7	580	9.97
	500	500	0.7	580	10.03
	560	560	0.7	580	10.00
	600	600	0.7	380	8.76
630	315	315	0.7	610	9.93
	355	355	0.7	610	10.11
	400	400	0.7	610	10.37
	450	450	0.7	610	10.78
	500	500	0.7	610	10.88
	560	560	0.7	610	10.90
	630	630	0.7	395	9.40
710	355	355	0.7	670	12.36
	400	400	0.7	670	12.58
	450	450	0.7	670	13.12
	500	500	0.7	670	13.27
	560	560	0.7	670	13.35
	630	630	0.7	670	13.34
	710	710	0.7	445	12.49
800	400	400	0.9	740	20.80
	450	450	0.9	740	21.65
	500	500	0.9	740	22.08
	560	560	0.9	740	20.06
	630	630	0.9	740	22.86
	710	710	0.9	740	23.71
	800	800	0.9	500	19.62
900	450	450	0.9	825	23.69
	500	500	0.9	825	23.99
	560	560	0.9	825	24.28
	630	630	0.9	825	24.45
	710	710	0.9	825	25.17
	800	800	0.9	825	25.86
	900	900	0.9	650	29.30
1000	500	500	0.9	920	29.03
	560	560	0.9	920	29.44
	630	630	0.9	920	29.77
	710	710	0.9	920	30.74
	800	800	0.9	920	31.69
	900	900	0.9	920	31.38
	1000	1000	0.9	800	41.66

ALNOR® ventilation system
is a legally protected trademark and technical patent. All rights reserved.

Collar saddle for smoke extraction systems

SSCL-SMO / SSL-SMO



Description

SSCL-SMO/SSL-SMO full segmented collar saddle, fire resistance class:E_{600} 120 (h_o) S1500 single, designed for single-compartment smoke extraction systems and combined (dual-function) systems. It is available in a symmetrical and asymmetrical version, it is equipped with GASK two double seals for ventilation fittings made of EPDM and a 1.8 mm thick and 10 mm wide intumescent seal. Welding points and other joints are covered with high-temperature sealant, which use is required during assembly in a duct. SMOKE System fittings are available in diameters from 100 to 1000 mm.

Available versions:



SSCL-SMO-…-100
symmetrical saddle, galvanized steel



SSL-SMO-…-100
asymmetrical saddle, galvanized steel

Order example: SSCL-SMO-200-100

Product code example

Product code: **SSCL-SMO - aaa - bbb**

type
Ød$_1$
Ød$_3$

Dimensions

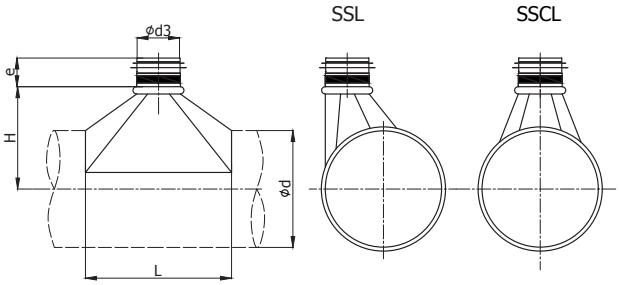

Ød$_{1\ nom}$ [mm]	Ød$_{3\ nom}$ [mm]	Sheet thickness t [mm]	L [mm]	H [mm]	Weight [kg]
100	100	0.7	190	95	0.45
	125	0.7	215	95	0.55
	140	0.7	240	100	0.63
	150	0.7	250	100	0.67
	160	0.7	260	100	0.71
125	100	0.7	190	110	0.48
	125	0.7	215	110	0.59
	140	0.7	240	115	0.68
	150	0.7	250	115	0.72
	160	0.7	260	115	0.76
	180	0.7	280	115	0.85
	200	0.7	330	130	1.04
140	100	0.7	190	115	0.48
	125	0.7	215	115	0.59
	140	0.7	240	120	0.68
	150	0.7	250	120	0.72
	160	0.7	260	120	0.76
	180	0.7	280	120	0.85
	200	0.7	330	135	1.05
	224	0.7	355	135	1.17
150	100	0.7	190	120	0.49
	125	0.7	215	120	0.60
	140	0.7	240	125	0.69
	150	0.7	250	125	0.73
	160	0.7	260	125	0.77
	180	0.7	280	125	0.86
	200	0.7	330	140	1.07
160	100	0.7	190	125	0.50
	125	0.7	215	125	0.60
	140	0.7	240	130	0.70
	150	0.7	250	130	0.74
	160	0.7	260	130	0.78
	180	0.7	280	130	0.88
	200	0.7	330	145	1.08
	224	0.7	355	145	1.20
	250	0.7	380	145	1.34

ALNOR® ventilation system
is a legally protected trademark and technical patent. All rights reserved.

Collar saddle for smoke extraction systems

SSCL-SMO / SSL-SMO

Ød$_{1\ nom}$ [mm]	Ød$_{3\ nom}$ [mm]	Sheet thickness t [mm]	L [mm]	H [mm]	Weight [kg]
180	100	0.7	190	135	0.51
	125	0.7	215	135	0.62
	140	0.7	240	140	0.72
	150	0.7	250	140	0.76
	160	0.7	260	140	0.80
	180	0.7	280	140	0.90
	200	0.7	330	155	1.11
	224	0.7	355	155	1.24
	250	0.7	380	155	1.37
	280	0.7	430	165	1.64
200	100	0.7	190	145	0.52
	125	0.7	215	145	0.64
	140	0.7	240	150	0.74
	150	0.7	250	150	0.78
	160	0.7	260	150	0.82
	180	0.7	280	150	0.92
	200	0.7	330	165	1.14
	224	0.7	355	165	1.27
	250	0.7	380	165	1.40
	280	0.7	430	175	1.68
	300	0.7	450	175	1.81
	315	0.7	465	175	1.90
224	100	0.7	190	160	0.56
	125	0.7	215	160	0.67
	140	0.7	240	165	0.78
	150	0.7	250	165	0.82
	160	0.7	260	165	0.87
	180	0.7	280	165	0.97
	200	0.7	330	180	1.20
	224	0.7	355	180	1.33
	250	0.7	380	180	1.47
	280	0.7	430	190	1.76
	300	0.7	450	190	1.89
	315	0.7	465	190	1.98
	355	0.7	525	200	2.35

Ød$_{1\ nom}$ [mm]	Ød$_{3\ nom}$ [mm]	Sheet thickness t [mm]	L [mm]	H [mm]	Weight [kg]
250	100	0.7	190	170	0.55
	125	0.7	215	170	0.67
	140	0.7	240	175	0.78
	150	0.7	250	175	0.82
	160	0.7	260	175	0.86
	180	0.7	280	175	0.97
	200	0.7	330	190	1.20
	224	0.7	355	190	1.33
	250	0.7	380	190	1.48
	280	0.7	430	200	1.72
	300	0.7	450	200	1.90
	315	0.7	465	200	1.95
	355	0.7	525	210	2.38
	400	0.7	570	210	2.64
280	100	0.7	190	185	0.57
	125	0.7	215	185	0.69
	140	0.7	240	190	0.80
	150	0.7	250	190	0.84
	160	0.7	260	190	0.89
	180	0.7	280	190	0.99
	200	0.7	330	205	1.24
	224	0.7	355	205	1.37
	250	0.7	380	205	1.52
	280	0.7	430	215	1.77
	300	0.7	450	215	1.95
	315	0.7	465	215	2.00
	355	0.7	525	225	2.44
	400	0.7	570	225	2.71
	450	0.7	620	225	3.25
300	100	0.7	190	195	0.58
	125	0.7	215	195	0.70
	140	0.7	240	200	0.81
	150	0.7	250	200	0.86
	160	0.7	260	200	0.90
	180	0.7	280	200	1.01
	200	0.7	330	215	1.26
	224	0.7	355	215	1.39
	250	0.7	380	215	1.54
	280	0.7	430	225	1.80
	300	0.7	450	225	1.98
	315	0.7	465	225	2.03
	355	0.7	525	235	2.48
	400	0.7	570	235	2.75
	450	0.7	620	235	3.29

ALNOR® ventilation system
is a legally protected trademark and technical patent. All rights reserved.

Collar saddle for smoke extraction systems

SSCL-SMO / SSL-SMO

$Ød_{1\ nom}$ [mm]	$Ød_{3\ nom}$ [mm]	Sheet thickness t [mm]	L [mm]	H [mm]	Weight [kg]
315	100	0.7	190	205	0.61
	125	0.7	215	205	0.73
	140	0.7	240	210	0.84
	150	0.7	250	210	0.89
	160	0.7	260	210	0.94
	180	0.7	280	210	1.04
	200	0.7	330	225	1.30
	224	0.7	355	225	1.44
	250	0.7	380	225	1.59
	280	0.7	430	235	1.85
	300	0.7	450	235	2.04
	315	0.7	465	235	2.14
	355	0.7	525	245	2.54
	400	0.7	570	245	2.86
	450	0.7	620	245	3.36
	500	0.7	680	250	3.86
355	100	0.7	190	225	0.63
	125	0.7	215	225	0.75
	140	0.7	240	230	0.87
	150	0.7	250	230	0.92
	160	0.7	260	230	0.96
	180	0.7	280	230	1.07
	200	0.7	330	245	1.34
	224	0.7	355	245	1.48
	250	0.7	380	245	1.63
	280	0.7	430	245	1.83
	300	0.7	450	255	2.10
	315	0.7	465	255	2.15
	355	0.7	525	265	2.62
	400	0.7	570	265	2.96
	450	0.7	620	265	3.45
	500	0.7	680	270	3.96
	560	0.7	740	270	4.50

$Ød_{1\ nom}$ [mm]	$Ød_{3\ nom}$ [mm]	Sheet thickness t [mm]	L [mm]	H [mm]	Weight [kg]
400	100	0.7	190	245	0.63
	125	0.7	215	245	0.75
	140	0.7	240	250	0.87
	150	0.7	250	250	0.92
	160	0.7	260	250	0.97
	180	0.7	280	250	1.08
	200	0.7	330	265	1.35
	224	0.7	355	265	1.50
	250	0.7	380	265	1.65
	280	0.7	430	275	1.99
	300	0.7	450	275	2.13
	315	0.7	465	275	2.24
	355	0.7	525	285	2.66
	400	0.7	570	285	3.01
	450	0.7	620	285	3.58
	500	0.7	680	290	4.10
	560	0.7	740	290	4.66
	600	0.7	780	290	5.05
	630	0.7	810	290	5.36
450	100	0.7	190	270	0.65
	125	0.7	215	270	0.78
	140	0.7	240	275	0.90
	150	0.7	250	275	0.95
	160	0.7	260	275	1.00
	180	0.7	280	275	1.11
	200	0.7	330	290	1.40
	224	0.7	355	290	1.54
	250	0.7	380	290	1.70
	280	0.7	430	300	2.04
	300	0.7	450	300	2.19
	315	0.7	465	300	2.29
	355	0.7	525	310	2.74
	400	0.7	570	310	3.09
	450	0.7	620	310	3.67
	500	0.7	680	315	4.21
	560	0.7	740	315	4.78
	600	0.7	780	315	5.18
	630	0.7	810	315	5.49
	710	0.7	890	315	6.73

ALNOR® ventilation system
is a legally protected trademark and technical patent. All rights reserved.

Collar saddle for smoke extraction systems

SSCL-SMO / SSL-SMO

Ød$_{1\ nom}$ [mm]	Ød$_{3\ nom}$ [mm]	Sheet thickness t [mm]	L [mm]	H [mm]	Weight [kg]
500	100	0.7	190	300	0.56
	125	0.7	215	300	0.80
	140	0.7	240	305	0.93
	150	0.7	250	305	0.97
	160	0.7	260	305	1.02
	180	0.7	280	305	1.14
	200	0.7	330	320	1.44
	224	0.7	355	320	1.58
	250	0.7	380	320	1.74
	280	0.7	430	330	2.10
	300	0.7	450	330	2.24
	315	0.7	465	330	2.35
	355	0.7	525	340	2.81
	400	0.7	570	340	3.17
	450	0.7	620	340	3.76
	500	0.7	680	345	4.31
	560	0.7	740	345	4.94
	600	0.7	780	345	5.30
	630	0.7	810	345	5.62
	710	0.7	890	345	6.87
	800	0.9	980	345	10.26
560	200	0.7	330	345	1.48
	224	0.7	355	345	1.63
	250	0.7	380	345	1.78
	280	0.7	430	355	2.16
	300	0.7	450	355	2.31
	315	0.7	465	355	2.42
	355	0.7	525	365	2.89
	400	0.7	570	365	3.26
	450	0.7	620	365	3.77
	500	0.7	680	370	4.32
	560	0.7	740	370	4.95
	600	0.7	780	370	5.43
	630	0.7	810	370	5.75
	710	0.7	890	370	7.03
	800	0.9	980	370	10.47
	900	0.9	1080	370	12.17

Ød$_{1\ nom}$ [mm]	Ød$_{3\ nom}$ [mm]	Sheet thickness t [mm]	L [mm]	H [mm]	Weight [kg]
600	200	0.7	330	365	1.51
	224	0.7	355	365	1.56
	250	0.7	380	365	1.83
	280	0.7	430	375	2.20
	300	0.7	450	375	2.35
	315	0.7	465	375	2.46
	355	0.7	525	385	2.94
	400	0.7	570	385	3.31
	450	0.7	620	385	3.88
	500	0.7	680	390	4.49
	560	0.7	740	390	5.09
	600	0.7	780	390	5.79
	630	0.7	810	390	5.84
	710	0.7	890	390	7.11
	800	0.9	980	390	10.59
	900	0.9	1080	390	12.31
	1000	0.9	1180	390	14.37
630	200	0.7	330	380	1.53
	224	0.7	355	380	1.68
	250	0.7	380	380	1.85
	280	0.7	430	390	2.23
	300	0.7	450	390	2.38
	315	0.7	465	390	2.49
	355	0.7	525	400	2.98
	400	0.7	570	400	3.35
	450	0.7	620	400	3.96
	500	0.7	680	405	4.54
	560	0.7	740	405	5.15
	600	0.7	780	405	5.57
	630	0.7	810	405	5.90
	710	0.7	890	405	7.18
	800	0.9	980	405	10.69
	900	0.9	1080	405	12.43
	1000	0.9	1180	405	14.50

ALNOR® ventilation system
is a legally protected trademark and technical patent. All rights reserved.

Collar saddle for smoke extraction systems

SSCL-SMO / SSL-SMO

Ød$_{1\ nom}$ [mm]	Ød$_{3\ nom}$ [mm]	Sheet thickness t [mm]	L [mm]	H [mm]	Weight [kg]
710	250	0.7	380	420	1.91
	280	0.7	430	420	2.13
	300	0.7	450	430	2.45
	315	0.7	465	430	2.57
	355	0.7	525	440	3.07
	400	0.7	570	440	3.45
	450	0.7	620	440	4.07
	500	0.7	680	445	4.66
	560	0.7	740	445	5.28
	600	0.7	780	445	5.72
	630	0.7	810	445	6.05
	710	0.7	890	445	7.35
	800	0.9	980	445	10.95
	900	0.9	1080	445	12.74
	1000	0.9	1180	445	14.83
800	250	0.9	380	465	2.44
	280	0.9	430	475	2.72
	300	0.9	450	475	3.14
	315	0.9	465	475	3.28
	355	0.9	525	485	3.93
	400	0.9	570	485	4.42
	450	0.9	620	485	5.16
	500	0.9	680	490	5.92
	560	0.9	740	490	6.71
	600	0.9	780	490	7.26
	630	0.9	810	490	7.68
	710	0.9	890	490	9.24
	800	0.9	980	490	11.21
	900	0.9	1080	490	13.04
	1000	0.9	1180	490	15.17
900	315	0.9	465	525	3.39
	355	0.9	525	535	4.06
	400	0.9	570	535	4.56
	450	0.9	620	535	5.31
	500	0.9	680	540	6.09
	560	0.9	740	540	6.89
	600	0.9	780	540	7.46
	630	0.9	810	540	7.89
	710	0.9	890	540	9.47
	800	0.9	980	540	11.46
	900	0.9	1080	540	13.31
	1000	0.9	1180	540	15.51

Ød$_{1\ nom}$ [mm]	Ød$_{3\ nom}$ [mm]	Sheet thickness t [mm]	L [mm]	H [mm]	Weight [kg]
1000	315	0.9	465	575	3.49
	355	0.9	525	585	4.18
	400	0.9	570	585	4.69
	450	0.9	620	585	5.44
	500	0.9	680	590	6.24
	560	0.9	740	590	7.06
	600	0.9	780	590	7.63
	630	0.9	810	590	8.07
	710	0.9	890	590	9.69
	800	0.9	980	590	11.72
	900	0.9	1080	590	13.58
	1000	0.9	1180	590	15.81

ALNOR® ventilation system
is a legally protected trademark and technical patent. All rights reserved.

Collar saddle for smoke extraction systems

SPSL-SMO



Description

SPSL-SMO segmented short collar saddle, fire resistance class:E_{600} 120 (h_o) S1500 single, designed for single-compartment smoke extraction systems and combined (dual-function) systems. It is used as a multi-purpose piece for construction of T-pieces or branches, it is equipped with GASK double lip seals for ventilation fittings made of EPDM and a 1.8 mm thick and 10 mm wide intumescent seal. Welding points and other joints are covered with high-temperature sealant, which use is required during assembly on a duct. SMOKE System fittings are available in diameters from 100 to 1000 mm.

Order example: SPSL-SMO-200-100

Product code example

Product code: **SPSL-SMO - aaa - bbb**

type
Ød
Ød$_3$

Dimensions

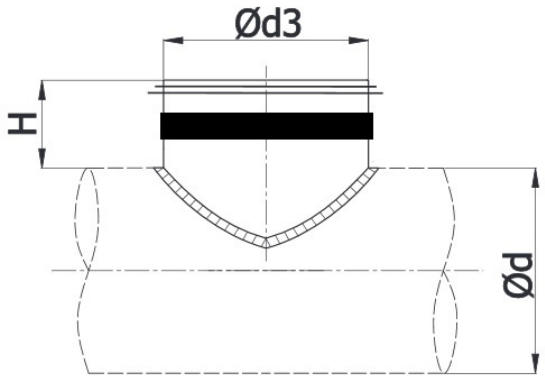

Ød$_{nom}$ [mm]	Ød$_{3\ nom}$ [mm]	Sheet thickness t [mm]	H [mm]	Weight [kg]
100	100	0.7	80	0.20
125	100	0.7	80	0.18
	125	0.7	80	0.26
140	100	0.7	80	0.18
	125	0.7	80	0.24
	140	0.7	80	0.30
150	100	0.7	80	0.18
	125	0.7	80	0.24
	140	0.7	80	0.28
	150	0.7	80	0.32
160	100	0.7	80	0.18
	125	0.7	80	0.24
	140	0.7	80	0.28
	150	0.7	80	0.31
	160	0.7	80	0.35
180	100	0.7	80	0.18
	125	0.7	80	0.23
	140	0.7	80	0.27
	150	0.7	80	0.30
	160	0.7	80	0.33
	180	0.7	80	0.40
200	100	0.7	80	0.18
	125	0.7	80	0.23
	140	0.7	80	0.26
	150	0.7	80	0.29
	160	0.7	80	0.32
	180	0.7	80	0.38
	200	0.7	80	0.46

ALNOR® ventilation system
is a legally protected trademark and technical patent. All rights reserved.

Collar saddle for smoke extraction systems

SPSL-SMO

$Ød_{nom}$ [mm]	$Ød_{3\ nom}$ [mm]	Sheet thickness t [mm]	H [mm]	Weight [kg]
224	100	0.7	80	0.17
	125	0.7	80	0.23
	140	0.7	80	0.26
	150	0.7	80	0.28
	160	0.7	80	0.31
	180	0.7	80	0.36
	200	0.7	80	0.43
	224	0.7	80	0.53
250	100	0.7	80	0.17
	125	0.7	80	0.22
	140	0.7	80	0.26
	150	0.7	80	0.28
	160	0.7	80	0.30
	180	0.7	80	0.35
	200	0.7	80	0.41
	224	0.7	80	0.49
	250	0.7	80	0.61
280	100	0.7	80	0.17
	125	0.7	80	0.22
	140	0.7	80	0.25
	150	0.7	80	0.28
	160	0.7	80	0.30
	180	0.7	80	0.35
	200	0.7	80	0.40
	224	0.7	80	0.47
	250	0.7	80	0.56
	280	0.7	80	0.71
300	100	0.7	80	0.17
	125	0.7	80	0.22
	140	0.7	80	0.25
	150	0.7	80	0.27
	160	0.7	80	0.30
	180	0.7	80	0.34
	200	0.7	80	0.39
	224	0.7	80	0.46
	250	0.7	80	0.55
	280	0.7	80	0.67
	300	0.7	80	0.78

$Ød_{nom}$ [mm]	$Ød_{3\ nom}$ [mm]	Sheet thickness t [mm]	H [mm]	Weight [kg]
315	100	0.7	80	0.17
	125	0.7	80	0.22
	140	0.7	80	0.25
	150	0.7	80	0.27
	160	0.7	80	0.29
	180	0.7	80	0.34
	200	0.7	80	0.39
	224	0.7	80	0.46
	250	0.7	80	0.54
	280	0.7	80	0.65
	300	0.7	80	0.74
	315	0.7	80	0.84
355	100	0.7	80	0.17
	125	0.7	80	0.22
	140	0.7	80	0.25
	150	0.7	80	0.27
	160	0.7	80	0.29
	180	0.7	80	0.33
	200	0.7	80	0.38
	224	0.7	80	0.45
	250	0.7	80	0.52
	280	0.7	80	0.62
	300	0.7	80	0.69
	315	0.7	80	0.76
	355	0.7	80	0.99
400	100	0.7	80	0.17
	125	0.7	80	0.22
	140	0.7	80	0.25
	150	0.7	80	0.27
	160	0.7	80	0.29
	180	0.7	80	0.33
	200	0.7	80	0.38
	224	0.7	80	0.44
	250	0.7	80	0.50
	280	0.7	80	0.60
	300	0.7	80	0.66
	315	0.7	80	0.72
	355	0.7	80	0.89
	400	0.7	80	1.17

ALNOR® ventilation system
is a legally protected trademark and technical patent. All rights reserved.

Collar saddle for smoke extraction systems

SPSL-SMO

$Ød_{nom}$ [mm]	$Ød_{3\ nom}$ [mm]	Sheet thickness t [mm]	H [mm]	Weight [kg]
450	100	0.7	80	0.17
	125	0.7	80	0.22
	140	0.7	80	0.24
	150	0.7	80	0.26
	160	0.7	80	0.28
	180	0.7	80	0.33
	200	0.7	80	0.37
	224	0.7	80	0.43
	250	0.7	80	0.49
	280	0.7	80	0.58
	300	0.7	80	0.64
	315	0.7	80	0.69
	355	0.7	80	0.84
	400	0.7	80	1.04
	450	0.7	80	1.39
500	100	0.7	80	0.17
	125	0.7	80	0.22
	140	0.7	80	0.24
	150	0.7	80	0.26
	160	0.7	80	0.28
	180	0.7	80	0.32
	200	0.7	80	0.38
	224	0.7	80	0.42
	250	0.7	80	0.48
	280	0.7	80	0.56
	300	0.7	80	0.62
	315	0.7	80	0.67
	355	0.7	80	0.80
	400	0.7	80	0.98
	450	0.7	80	1.24
	500	0.7	80	1.62
560	200	0.7	80	0.36
	224	0.7	80	0.42
	250	0.7	80	0.48
	280	0.7	80	0.55
	300	0.7	80	0.61
	315	0.7	80	0.65
	355	0.7	80	0.77
	400	0.7	80	0.94
	450	0.7	80	1.16
	500	0.7	80	1.43
	560	0.7	80	1.92

$Ød_{nom}$ [mm]	$Ød_{3\ nom}$ [mm]	Sheet thickness t [mm]	H [mm]	Weight [kg]
600	200	0.7	80	0.36
	224	0.7	80	0.41
	250	0.7	80	0.47
	280	0.7	80	0.55
	300	0.7	80	0.60
	315	0.7	80	0.64
	355	0.7	80	0.76
	400	0.7	80	0.91
	450	0.7	80	1.12
	500	0.7	80	1.36
	560	0.7	80	1.74
	600	0.7	80	2.14
630	200	0.7	80	0.36
	224	0.7	80	0.41
	250	0.7	80	0.47
	280	0.7	80	0.54
	300	0.7	80	0.59
	315	0.7	80	0.63
	355	0.7	80	0.75
	400	0.7	80	0.90
	450	0.7	80	1.09
	500	0.7	80	1.33
	560	0.7	80	1.67
	600	0.7	80	1.98
	630	0.7	80	2.30
710	250	0.7	80	0.46
	280	0.7	80	0.53
	300	0.7	80	0.58
	315	0.7	80	0.62
	355	0.7	80	0.73
	400	0.7	80	0.87
	450	0.7	80	1.05
	500	0.7	80	1.25
	560	0.7	80	1.55
	600	0.7	80	1.79
	630	0.7	80	1.99
	710	0.7	110	3.14

ALNOR® ventilation system
is a legally protected trademark and technical patent. All rights reserved.

Collar saddle for smoke extraction systems

SPSL-SMO

$Ød_{nom}$ [mm]	$Ød_{3\ nom}$ [mm]	Sheet thickness t [mm]	H [mm]	Weight [kg]
800	250	0.9	80	0.59
	280	0.9	80	0.67
	300	0.9	80	0.73
	315	0.9	80	0.78
	355	0.9	80	0.92
	400	0.9	80	1.08
	450	0.9	80	1.29
	500	0.9	80	1.53
	560	0.9	80	1.87
	600	0.9	80	2.14
	630	0.9	80	2.35
	710	0.9	110	3.52
	800	0.9	110	4.83
900	315	0.9	80	0.77
	355	0.9	80	0.90
	400	0.9	80	1.05
	450	0.9	80	1.25
	500	0.9	80	1.47
	560	0.9	80	1.78
	600	0.9	80	2.01
	630	0.9	80	2.20
	710	0.9	110	3.26
	800	0.9	110	4.20
	900	0.9	110	5.80
1000	315	0.9	80	0.76
	355	0.9	80	0.88
	400	0.9	80	1.03
	450	0.9	80	1.22
	500	0.9	80	1.43
	560	0.9	80	1.71
	600	0.9	80	1.93
	630	0.9	80	2.09
	710	0.9	110	3.09
	800	0.9	110	3.89
	900	0.9	110	5.05
	1000	0.9	130	6.85

ALNOR® ventilation system
is a legally protected trademark and technical patent. All rights reserved.

Male coupling for smoke extraction systems

NSL-SMO



Description

NSL-SMO male coupling, fire resistance class: E_{600} 120 (h_o) S1500 single, designed for single-compartment smoke extraction systems and combined (dual-function) systems. The coupling is used for connecting SPR-SMO ducts or female fittings, it is equipped with GASK double lip seals for ventilation fittings made of EPDM and 1.8 mm thick and 10 mm wide intumescent seal. Welding points and other joints are covered with high-temperature sealant. SMOKE System fittings are available in diameters from 100 to 1000 mm.

Order example: NSL-SMO-200.

Product code example

Product code: **NSL-SMO - aaa**

type

Ød

Dimensions

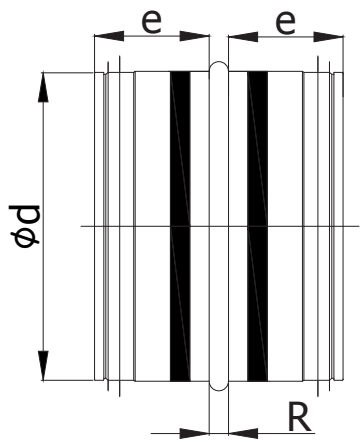

Ød 1 nom [mm]	L [mm]	Weight [kg]
100	8	0.23
125	8	0.29
140	8	0.32
150	8	0.34
160	8	0.36
180	8	0.41
200	8	0.45
224	8	0.51
250	8	0.57
280	8	0.64
300	8	0.68
315	8	0.72
355	10	0.81
400	10	0.91
450	10	1.33
500	10	1.48
560	10	1.66
600	10	1.78
630	10	1.87
710	12	2.72
800	12	3.93
900	12	4.47
1000	12	5.69

ALNOR® ventilation system
is a legally protected trademark and technical patent. All rights reserved.

Female coupling for smoke extraction systems

MSF-SMO



Description

MSF-SMO female coupling, fire resistance class: E_{600} 120 (h_o) S1500 single, designed for single-compartment smoke extraction systems and combined (dual-function) systems. The coupling is used for connecting male fittings, it is equipped with two GASK double lip seals for ventilation fittings made of EPDM rubber and 1.8 mm thick and 10 mm wide intumescent seal. Welding points and other joints are covered with high-temperature sealant. SMOKE System fittings are available in diameters from 100 to 1000 mm.

Order example: MSF-SMO-200.

Product code example

Product code: **MSF-SMO - aaa**

type

Ød

Dimensions

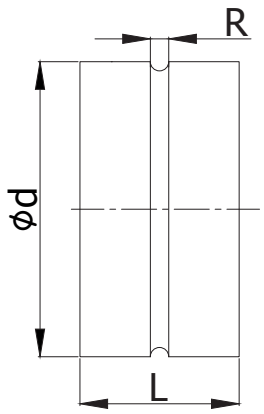

Ød [mm]	R [mm]	L [mm]	Weight [kg]
100	8	120	0.21
125	8	120	0.26
140	8	120	0.30
150	8	120	0.32
160	8	120	0.34
180	8	120	0.38
200	8	120	0.42
224	8	120	0.47
250	8	120	0.52
280	8	120	0.59
300	8	120	0.63
315	8	120	0.66
355	10	120	0.74
400	10	120	0.84
450	10	160	1.25
500	10	160	1.39
560	10	160	1.56
600	10	160	1.67
630	10	160	1.75
710	12	212	2.61
800	12	212	3.78
900	12	212	4.25
1000	12	242	5.41

ALNOR® ventilation system
is a legally protected trademark and technical patent. All rights reserved.

Segmented branch for the smoke extraction system

ILSL-SMO



Description

ILSL-SMO segmented branch with male end, fire resistance class:E_{600} 120 (h_o) S1500 single, designed for single-compartment smoke extraction systems and combined (dual-function) systems. It is equipped with GASK double lip seals for ventilation fittings made of EPDM rubber and a 1.8 mm thick and 10 mm wide intumescent seal. Welding points and other joints are covered with high-temperature sealant, which should be also used for sealing the connection of ILSL-SMO with another duct. SMOKE System fittings are available in diameters from 100 to 1000 mm.

Order example: ILSL-SMO-300

Product code example

Product code: **ILSL-SMO - aaa**

type

Ød

Dimensions

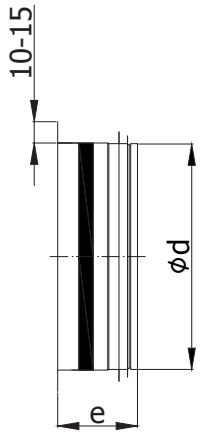

Ød [mm]	Weight [kg]
100	0,13
125	0,17
140	0,19
150	0,20
160	0,21
180	0,24
200	0,27
224	0,30
250	0,33
280	0,37
300	0,40
315	0,42
355	0,47
400	0,53
450	0,76
500	0,84
560	0,94
600	1,01
630	1,06
710	1,56
800	2,26
900	2,54
1000	3,01

ALNOR® ventilation system
is a legally protected trademark and technical patent. All rights reserved.

Take-off with a mesh for smoke extraction system

ILSNL-SMO

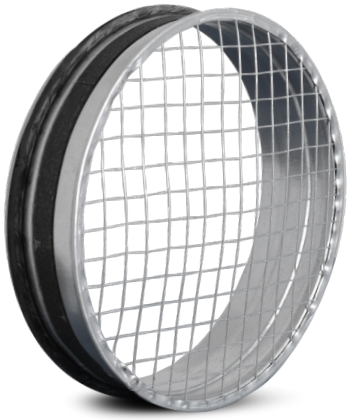

Description

ILSNL-SMO male take-off with mesh, fire resistance class: E_{600} 120 (h_o) S1500 single, designed for single-compartment smoke extraction systems and combined (dual-function) systems. It serves as an exhaust end piece, equipped with GASK double lip seals for ventilation fittings made of EPDM rubber and a 1.8 mm thick and 10 mm wide intumescent seal. Welding points and other joints are covered with high-temperature sealant. SMOKE System fittings are available in diameters from 100 to 1000 mm.

Order example: ILSNL-SMO-200

Product code example

Product code: **ILSNL-SMO - aaa**

type

Ød

Dimensions

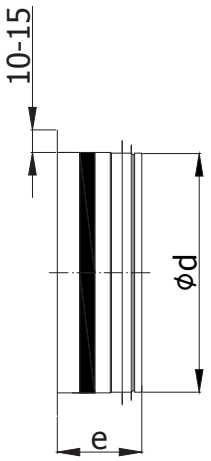

Ød [mm]	Weight [kg]
100	0.14
125	0.18
140	0.20
150	0.21
160	0.23
180	0.25
200	0.28
224	0.31
250	0.35
280	0.39
300	0.43
315	0.47
355	0.52
400	0.58
450	0.86
500	0.94
560	1.04
600	1.20
630	1.26
710	2.06
800	2.86
900	3.44
1000	4.01

ALNOR® ventilation system
is a legally protected trademark and technical patent. All rights reserved.

Female take-off with a mesh for smoke extraction system

ILSNF-SMO

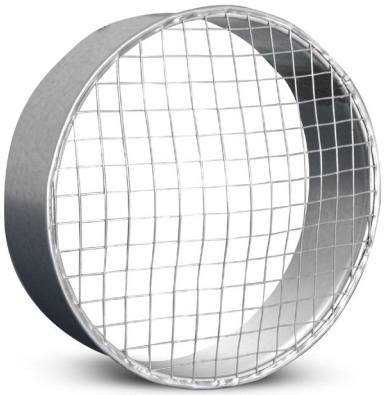

Description

ILSNF-SMO female take-off with mesh, fire resistance class: E_{600} 120 (h_o) S1500 single, designed for single-compartment smoke extraction systems and combined (dual-function) systems. Serves as an exhaust end piece. Welding points and other joints are covered with high-temperature sealant. SMOKE System fittings are available in diameters from 100 to 1000 mm.

Order example: ILSNF-SMO-200

Product code example

Product code: **ILSNF-SMO - aaa**

type

Ød

Dimensions

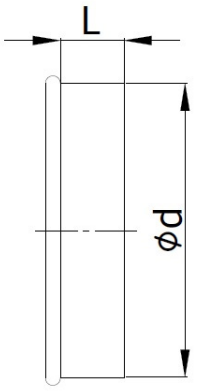

Ød$_{nom}$ [mm]	L [mm]	Weight [kg]
100	60	0.14
125	60	0.18
140	60	0.20
150	60	0.21
160	60	0.23
180	60	0.25
200	60	0.28
224	60	0.31
250	60	0.35
280	60	0.39
300	60	0.43
315	60	0.47
355	60	0.52
400	60	0.58
450	80	0.86
500	80	0.94
560	80	1.04
600	80	1.20
630	80	1.26
710	105	2.06
800	105	2.86
900	105	3.44
1000	120	4.01

ALNOR® ventilation system
is a legally protected trademark and technical patent. All rights reserved.

Angle take-off with mesh

ASVL-45-SMO

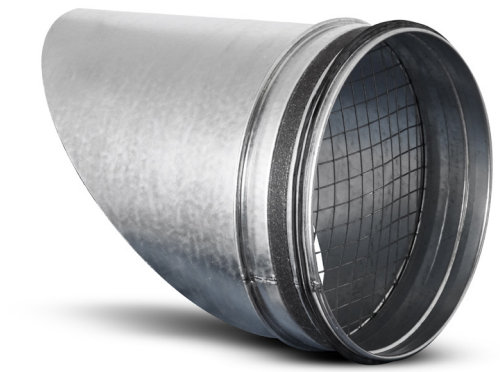

Description

ASVL-45-SMO angle take-off with mesh, with male end ASVL-45-SMO with fire resistance E_{600} 120 (h_o) S1500 singles designed for single-compartment smoke extraction systems and mixed (dual-function) systems. The 12.7x12.7 mm mesh, a drip directed at 45° angle, GASK double lip gasket for ventilation fittings made of EPDM rubber and a 1.8 mm thick and 10 mm wide intumescent seal. Welding points and other joints are covered with high-temperature sealant. SMOKE System fittings are available in diameters from 100 to 1000 mm.

Product code example

Product code: **ASVL-45-SMO - aaa**

type

Ød

Dimensions

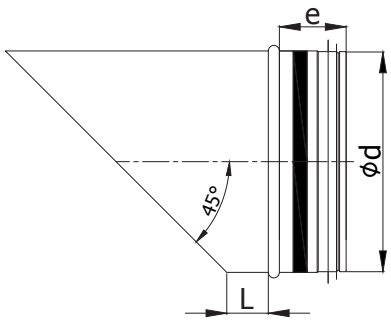

Ød$_{1\ nom}$ [mm]	L [mm]	Weight [kg]
100	20	0.27
125	30	0.39
140	30	0.45
150	30	0.49
160	30	0.55
180	30	0.64
200	30	0.74
224	30	0.88
250	60	1.18
280	60	1.39
300	60	1.55
315	60	1.69
355	60	2.02
400	60	2.42
450	90	3.35
500	90	3.93
560	90	4.68
600	90	1.20
630	90	5.75
710	120	7.98
800	120	12.23
900	120	14.98
1000	120	17.95

ALNOR® ventilation system
is a legally protected trademark and technical patent. All rights reserved.

Flexible duct connector for smoke extraction systems

ILA-NSL-SMO-SIL



Description

ILA-NSL-SMO-SIL flexible duct connector with male ends (thermal expansion joint), fire resistance class:E_{600} 120 (h_o) S1500 single, designed for single-compartment smoke extraction systems and combined (dual-function) systems. The flexible duct connector is made of AMT flexible duct connector tape, a joint consisting of a layer of silicone coated fabric and two strips of sheet metal on both sides, it is equipped with GASK double lip seals for ventilation fittings made of EPDM and a 1.8 mm thick and 10 mm wide intumescent seal. Welding points and other joints are covered with high-temperature sealant. SMOKE System fittings are available in diameters from 100 to 1000 mm.
Flexible duct connectors should be used for ducts longer than 5 m. The maximum permissible distance between flexible duct connectors must not exceed 10 m.

Available materials — product marking example:
ILA-NSL-SMO-SIL-…- galvanized steel sheet, silicone coated fabric

Przykład zamówienia: ILA-NSL-SMO-SIL-200

Product code example
Product code: **ILA-NSL-SMO - SIL - bbb**

type
fabric
diameter

Dimensions

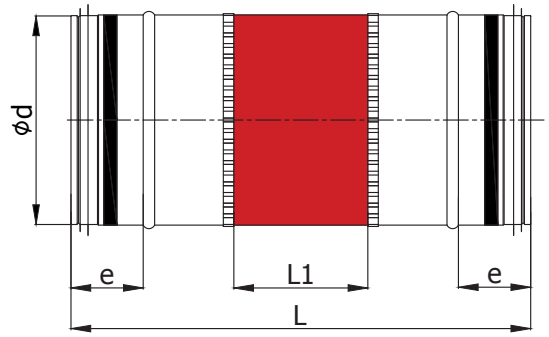

Ød$_{nom}$ [mm]	L_1 [mm]	L [mm]
100	100	350
125	100	350
140	100	350
150	100	350
160	100	350
180	100	350
200	100	350
224	100	350
250	100	350
280	100	350
300	100	350
315	100	350
355	100	350
400	100	350
450	100	390
500	100	390
560	100	390
600	100	390
630	100	390
710	100	440
800	100	440
900	100	440
1000	100	470

ALNOR® ventilation system
is a legally protected trademark and technical patent. All rights reserved.

Flexible duct connector with flanges for smoke extraction systems

ILA-FLS-SMO-SIL

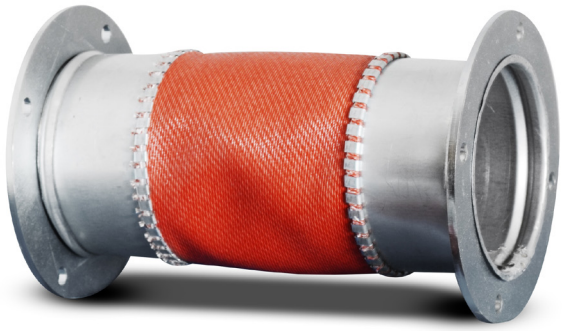

Wymiary

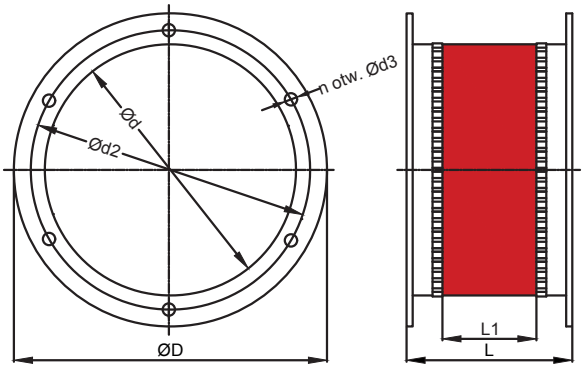

Description

ILA-FLS-SMO-SIL flexible duct connector with flanges (thermal expansion joint), fire resistance class:E600 120 (ho) S1500 single, designed for single-compartment smoke extraction systems and combined (dual-function) systems. The connector is made of AMT tape, a joint consisting of a layer of silicone coated fabric and two strips of sheet metal on both sides. Welding points and other joints are covered with high-temperature sealant. SMOKE System fittings are available in diameters from 100 to 1000 mm.
Flexible duct connector should be used for ducts longer than 5 m. The maximum permissible distance between flexible duct connector must not exceed 10 m.

Available materials - product marking example:
ILA-FLS-SMO-SIL-…- galvanized steel sheet, silicone coated fabric

Order example: ILA-FLS-SMO-SIL-200

Product code example
Product code: **ILA-FLS-SMO - SIL - bbb**

type
fabric
diameter

$Ød_{nom}$ [mm]	ØD [mm]	$Ød_2$ [mm]	$Ød_3$ [mm]	n [pcs.]	L_1 [mm]	L [mm]
100	132	132	9.5	4	100	210
112	152	144	9.5	4	100	210
125	177	157	9.5	4	100	210
140	192	172	9.5	6	100	210
150	202	182	9.5	6	100	210
160	212	192	9.5	6	100	210
180	232	212	9.5	6	100	210
200	253	233	9.5	6	100	210
224	277	257	9.5	6	100	210
250	303	283	9.5	6	100	210
280	343	317	9.5	8	100	210
300	363	337	9.5	8	100	210
315	378	352	9.5	8	100	210
355	418	392	9.5	8	100	210
400	464	438	9.5	8	100	210
450	514	488	9.5	8	100	210
500	564	538	9.5	8	100	210
560	634	600	9.5	12	100	210
600	676	640	9.5	12	100	210
630	704	670	9.5	12	100	210
710	784	750	9.5	12	100	210
800	874	840	9.5	16	100	210
900	974	940	9.5	16	100	210
1000	1075	1041	9.5	16	100	210

ALNOR® ventilation system
is a legally protected trademark and technical patent. All rights reserved.

Male end cap for smoke extraction system

CSL-SMO



Description

CSL-SMO segmented male end cap, fire resistance class: E_{600} 120 (h_o) S1500 single, designed for single-compartment smoke extraction systems and combined (dual-function) systems. It is equipped with GASK double lip seals for ventilation fittings made of EPDM rubber and a 1.8 mm thick and 10 mm wide intumescent seal. Welding points and other joints are covered with high-temperature sealant. SMOKE System fittings are available in diameters from 100 to 1000 mm.

Order example: CSL-SMO-200

Product code example

Product code: **CSL-SMO - aaa**

type

Ød

Dimensions

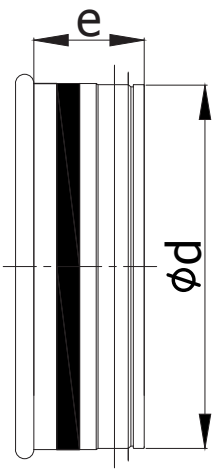

Ød [mm]	Weight [kg]
100	0.17
125	0.24
140	0.28
150	0.30
160	0.33
180	0.39
200	0.45
224	0.53
250	0.62
280	0.73
300	0.81
315	0.87
355	1.04
400	1.26
450	1.68
500	1.97
560	2.35
600	2.62
630	2.83
710	3.79
800	5.94
900	7.14
1000	8.72

ALNOR® ventilation system
is a legally protected trademark and technical patent. All rights reserved.

Female end cap for smoke extraction systems

CSF-SMO



Description

CSF-SMO segmented female end cap, fire resistance class: E_{600} 120 (h_o) S1500 single, designed for single-compartment smoke extraction systems and combined (dual-function) systems. Welding points and other joints are covered with high-temperature sealant. SMOKE System fittings are available in diameters from 100 to 1000 mm.

Order example: CSF-SMO-200

Product code example

Product code: **CSF-SMO - aaa**

type

Ød

Dimensions

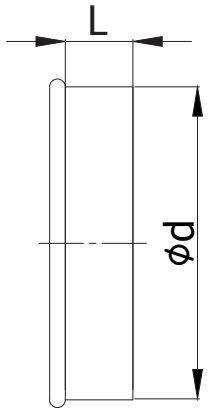

Ød$_{nom}$ [mm]	L [mm]	Weight [kg]
100	60	0.17
125	60	0.24
140	60	0.28
150	60	0.30
160	60	0.33
180	60	0.39
200	60	0.45
224	60	0.53
250	60	0.62
280	60	0.73
300	60	0.81
315	60	0.87
355	60	1.04
400	60	1.26
450	80	1.68
500	80	1.97
560	80	2.35
600	80	2.62
630	80	2.83
710	105	3.79
800	105	5.94
900	105	7.14
1000	120	8.72

ALNOR® ventilation system
is a legally protected trademark and technical patent. All rights reserved.

Female end cap with a handle for smoke extraction system

CSFH-SMO

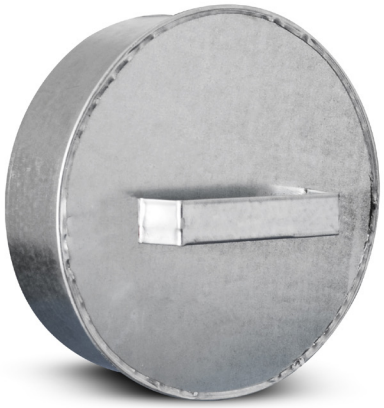

Description

CSFH-SMO segmented female end cap with handle, fire resistance class:E_{600} 120 (h_o) S1500 single, designed for single-compartment smoke extraction systems and combined (dual-function) systems. Welding points and other joints are covered with high-temperature sealant. SMOKE System fittings are available in diameters from 100 to 1000 mm.
There is a handle available for Ø100÷ Ø 224.
There are two handles available for Ø250÷ Ø 1000.

Order example: CSFH-SMO-200

Product code example
Product code: **CSFH-SMO - aaa**

type
Ød

Dimensions

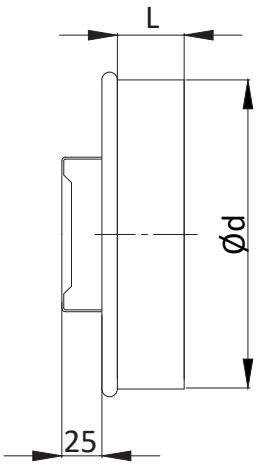

$Ød_{nom}$ [mm]	L [mm]	Weight [kg]
100	60	0.17
125	60	0.24
140	60	0.28
150	60	0.30
160	60	0.33
180	60	0.39
200	60	0.45
224	60	0.53
250	60	0.62
280	60	0.73
300	60	0.81
315	60	0.87
355	60	1.04
400	60	1.26
450	80	1.68
500	80	1.97
560	80	2.35
600	80	2.62
630	80	2.83
710	105	3.79
800	105	5.94
900	105	7.14
1000	120	8.72

ALNOR® ventilation system
is a legally protected trademark and technical patent. All rights reserved.

Smoke extraction grille

SGR-SMO



Description

SGR-SMO grilles are used for exhaust air in smoke extraction ducts, fire resistance class: E_{600} 120 (h_o) S1500 single, designed for single-compartment smoke extraction systems and combined (dual-function) systems. Front frame is made of pressed steel profiles, adhering to the profile of a circular air duct. Blades made of rolled steel plate profile. Horizontal or vertical fixture of blades, inclination angle of the blades of the grille is 90°. If one of the dimensions of the mounting hole A or B exceeds 550 mm, the grille is equipped with a bracing bracket made of galvanized steel sheet.

Assembly:
The grille is mounted directly on the circular duct (without sealing materials) using visible screws in all extruded holes in the front frame.

Dimension of mounting hole A or B [mm]

A or B < 550	Without bracing brackets
550 < A or B < 750	One bracket
A or B > 750	Two brackets

Available materials — product marking example:
SGR-SMO-0H - galvanized steel, horizontal fixture of blade
SGR-SMO-0V - galvanized steel, vertical fixture of blade

Product code example
Product code: SGR-SMO - aa - bbb - ccc - ddd

type
version
dimension A
dimension B
duct diameter

Dimensions

Grille with fixed vertical blades - SGR-SMO-0H.

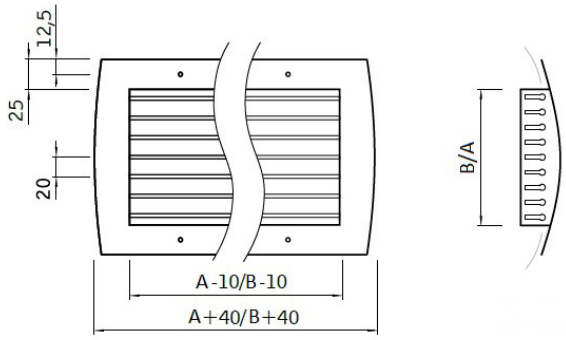

Grille with fixed horizontal blades - SGR-SMO-0V.

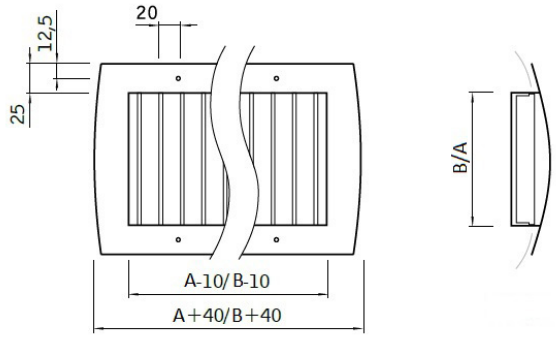

Dimension AxB [mm]	*Duct diameter [mm]*	*Area [m²]*	*Weigh [kg]*
125x75	Ø100; Ø125; Ø140; Ø150; Ø160; Ø180; Ø200	0.0066	0.5
325x75	Ø280; Ø300	0.0186	0.9
525x75	Ø355	0.0306	1.3
125x125	Ø224; Ø250;	0.0121	0.9
225x125	Ø315	0.0231	1.1
325x125	Ø400	0.0341	1.3
425x125	Ø450	0.0451	1.5
525x125	Ø500	0.0561	1.7
325x225	Ø560; Ø600; Ø630	0.0651	1.9
525x225	Ø710	0.1071	3.1
825x225	Ø900; Ø1000	0.1701	4.8

ALNOR® ventilation system
is a legally protected trademark and technical patent. All rights reserved.

Smoke extraction grille

SGR-SMO

Technical data

Q [m³/h]	*Type*	*75 x 125*	*125 x 125*	*75 x 325*	*125 x 225*	*75 x 525*	*125 x 325*	*125 x 425*	*125 x 525*	*225 x 325*	*225 x 525*	*225 x 825*
	Aef[m2]	0.0066	0.0121	0.0186	0.0231	0.0306	0.0341	0.0451	0.0561	0.0651	0.1071	0.1701
20	Dp [Pa]	24.2										
	L [m]	4.6										
	L_{WA}[dB(A)]	<35										
40	Dp [Pa]	98.4	20.4									
	L [m]	7.9	4.6									
	L_{WA}[dB(A)]	<40	<35									
60	Dp [Pa]	223	46.5	15.3								
	L [m]	9.8	6.8	4.6								
	L_{WA}[dB(A)]	<45	<40	30								
80	Dp [Pa]	400	83.4	27.5	15.7							
	L [m]	11.1	8.3	6.3	5.2							
	L_{WA}[dB(A)]	50	40	<35	<35							
100	Dp [Pa]	628	131	43.3	24.8	12	9.1					
	L [m]	12.2	9.5	7.5	6.5	5.3	4.8					
	L_{WA}[dB(A)]	>50	45	35	<35	30	30					
150	Dp [Pa]	1425	299	99	56.7	27.5	20.8	10.1	5.8			
	L [m]	14.1	11.6	9.8	8.9	7.8	7.3	6.2	5.3			
	L_{WA}[dB(A)]	>50	50	40	<40	35	<35	30	<30			
200	Dp [Pa]	2549	537	178	102	49.6	37.5	18.3	10.5	7.1		
	L [m]	15.5	13.1	11.5	10.6	9.5	9.1	8	7.2	6.6		
	L_{WA}[dB(A)]	>50	>50	<50	40	<40	<40	<35	<35	<30		
300	Dp [Pa]		1225	407	234	114	86.2	42.1	24.1	16.5	4.6	1.4
	L [m]		15.3	13.8	13	12	11.7	10.7	9.9	9.4	7.7	6.1
	L_{WA}[dB(A)]		>50	>50	<50	<45	40	<40	35	<35	<30	<30
400	Dp [Pa]		2199	733	421	205	156	76.1	43.6	29.8	8.3	2.6
	L [m]		16.8	15.4	14.7	13.8	13.5	12.6	11.9	11.4	9.8	8.3
	L_{WA}[dB(A)]		>50	10.3	8.2	50	<50	40	<40	<40	30	<30
500	Dp [Pa]			1155	664	324	246	120	69	47.2	13.2	4.1
	L [m]			16.7	16	15.2	14.9	14	13.4	12.9	11.4	10.1
	L_{WA}[dB(A)]			>50	>50	>50	50	45	40	<40	<35	<30
600	Dp [Pa]			1676	965	471	357	175	100	68.7	19.3	5.9
	L [m]			17.7	17.1	16.3	16	15.2	14.6	14.2	12.8	11.5
	L_{WA}[dB(A)]			>50	>50	9.3	8.3	<50	<45	40	<35	30
700	Dp [Pa]				1322	646	490	241	138	94.5	26.6	8.2
	L [m]				18	17.2	17	16.2	15.6	15.2	13.9	12.7
	L_{WA}[dB(A)]				>50	>50	>50	>50	45	<45	<40	<35
800	Dp [Pa]					849	645	317	182	124	35.1	10.8
	L [m]					18.1	17.8	17.1	16.5	16.2	14.9	13.7
	L_{WA}[dB(A)]					12.4	11.1	>50	50	<50	<40	<35
1000	Dp [Pa]					1342	1019	501	288	197	55.7	17.2
	L [m]					19.4	19.2	18.5	18	17.7	16.5	15.5
	L_{WA}[dB(A)]					>50	>50	>50	>50	50	<40	35

ALNOR® ventilation system
is a legally protected trademark and technical patent. All rights reserved.

Kratka oddymiająca SMOKE System
SGR-SMO

Q [m³/h]	Type	75 x 125	125 x 125	75 x 325	125 x 225	75 x 525	125 x 325	125 x 425	125 x 525	225 x 325	225 x 525	225 x 825
	Aef[m²]	0.0066	0.0121	0.0186	0.0231	0.0306	0.0341	0.0451	0.0561	0.0651	0.1071	0.1701
1200	Dp [Pa]						1481	729	419	287	81.2	25.1
	L [m]						20.3	19.7	19.3	18.9	17.9	16.9
	L_{WA}[dB(A)]						>50	>50	>50	>50	<45	<40
1400	Dp [Pa]							1000	575	395	112	34.6
	L [m]							20.7	20.3	20	19	18.1
	L_{WA}[dB(A)]							>50	>50	>50	45	<40
1600	Dp [Pa]								758	520	147	45.7
	L [m]								21.2	20.9	20	19.1
	L_{WA}[dB(A)]								>50	>50	<50	<40
1800	Dp [Pa]								966	663	188	58.4
	L [m]								22	21.7	20.8	20
	L_{WA}[dB(A)]								>50	12.9	50	<45
2000	Dp [Pa]									824	234	72.6
	L [m]									22.4	21.6	20.8
	L_{WA}[dB(A)]									>50	>50	<45

Aef[m²] – effective grille area;
Dp [Pa] – pressure loss;
L [m] – range;
LWA[dB(A)] – sound pressure level;

ALNOR® ventilation system
is a legally protected trademark and technical patent. All rights reserved.

Silencer for circular smoke extraction systems

SIL-GL-SMO



Description

SIL-GL-SMO circular silencer, fire resistance class:E600 120 (ho) S1500 single, designed for single-compartment smoke extraction systems and combined (dual-function) systems. It is equipped with GASK double lip seals for GASK ventilation fittings made of EPDM and a 1.8 mm thick and 10 mm wide intumescent seal. Welding points and other joints are covered with high-temperature sealant. SMOKE System fittings are available in diameters from 100 to 1000 mm.
SIL-GL-SMO circular silencers consist of inner jacket made of perforated metal sheet, filling in the form of glass wool with a thickness of 50mm or 100mm with a minimum density of 10 kg/m^3 and outer coat.

Available materials — product marking example:

SIL-GL-SMO-50-…	- galvanized steel, 50 mm thick glass wool
SIL-GL-SMO-100-…	- galvanized steel, 100 mm thick glass wool

Order example: SIL-GL-SMO-100-400-900

Product code example

Product code: **SIL-GL - aaa - bbb - ccc**

type
insulation thickness
diameter d_1
length

Diemensions

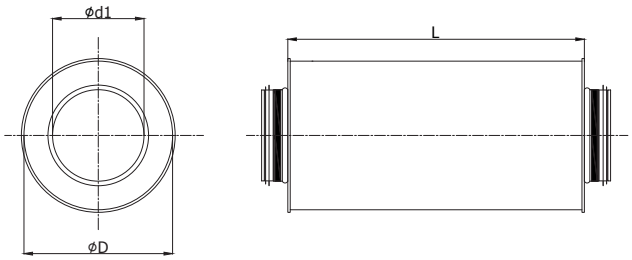

ALNOR® ventilation system
is a legally protected trademark and technical patent. All rights reserved.

Silencer for circular smoke extraction systems

SIL-GL-SMO

For SIL-GL-SMO-50 - 50 mm of insulation

Product code	Ød$_1$ [mm]	D [mm]	L [mm]	attenuation [dB] for frequency [Hz]							Weight [kg]
				125	250	500	1000	2000	4000	8000	
SIL-GL-SMO-50-100-300	100	200	300	5	13	26	41	44	22	24	2
SIL-GL-SMO-50-100-500	100	200	500	8	16	29	44	47	26	27	4
SIL-GL-SMO-50-100-600	100	200	600	9	17	30	45	49	27	29	4
SIL-GL-SMO-50-100-900	100	200	900	12	19	32	48	51	29	31	6
SIL-GL-SMO-50-100-1000	100	200	1000	13	21	34	49	52	30	32	7
SIL-GL-SMO-50-100-1200	100	200	1200	15	23	35	50	54	32	34	8
SIL-GL-SMO-50-125-300	125	224	300	4	11	22	37	41	19	21	3
SIL-GL-SMO-50-125-500	125	224	500	7	14	26	40	44	22	24	4
SIL-GL-SMO-50-125-600	125	224	600	8	15	27	41	45	24	25	5
SIL-GL-SMO-50-125-900	125	224	900	11	18	29	44	47	26	28	7
SIL-GL-SMO-50-125-1000	125	224	1000	12	19	31	45	49	27	29	8
SIL-GL-SMO-50-125-1200	125	224	1200	14	21	32	46	50	29	31	9
SIL-GL-SMO-50-150-300	150	250	300	4	11	23	34	36	18	19	3
SIL-GL-SMO-50-150-500	150	250	500	7	14	26	37	39	21	22	5
SIL-GL-SMO-50-150-600	150	250	600	8	15	27	39	41	22	23	6
SIL-GL-SMO-50-150-900	150	250	900	11	18	29	42	43	25	26	8
SIL-GL-SMO-50-150-1000	150	250	1000	12	19	30	42	44	26	27	9
SIL-GL-SMO-50-150-1200	150	250	1200	14	21	32	44	46	27	28	10
SIL-GL-SMO-50-160-300	160	250	300	3	9	20	33	35	16	18	3
SIL-GL-SMO-50-160-500	160	250	500	6	12	23	36	38	19	21	5
SIL-GL-SMO-50-160-600	160	250	600	7	14	24	37	39	21	22	6
SIL-GL-SMO-50-160-900	160	250	900	10	16	26	40	42	23	25	8
SIL-GL-SMO-50-160-1000	160	250	1000	11	17	28	41	43	24	26	9
SIL-GL-SMO-50-160-1200	160	250	1200	13	19	29	42	44	26	27	11
SIL-GL-SMO-50-200-300	200	315	300	2	7	16	31	31	15	16	4
SIL-GL-SMO-50-200-500	200	315	500	5	10	19	34	34	18	19	6
SIL-GL-SMO-50-200-600	200	315	600	6	11	20	35	35	19	20	7
SIL-GL-SMO-50-200-900	200	315	900	8	13	23	38	38	22	23	10
SIL-GL-SMO-50-200-1000	200	315	1000	9	15	24	39	39	23	24	11
SIL-GL-SMO-50-200-1200	200	315	1200	11	17	26	41	41	25	26	13
SIL-GL-SMO-50-250-500	250	355	500	4	9	18	29	27	15	16	7
SIL-GL-SMO-50-250-600	250	355	600	5	11	19	30	28	16	18	8
SIL-GL-SMO-50-250-900	250	355	900	8	13	22	33	31	19	20	12
SIL-GL-SMO-50-250-1000	250	355	1000	9	14	23	33	32	20	21	13
SIL-GL-SMO-50-250-1200	250	355	1200	11	17	25	35	34	21	23	15
SIL-GL-SMO-50-250-1500	250	355	1500	12	18	26	37	35	23	24	19
SIL-GL-SMO-50-300-500	300	400	500	4	8	16	25	23	13	15	9
SIL-GL-SMO-50-300-600	300	400	600	5	10	18	27	25	14	16	10
SIL-GL-SMO-50-300-900	300	400	900	7	12	20	30	27	17	18	14
SIL-GL-SMO-50-300-1000	300	400	1000	8	13	21	30	28	18	19	15
SIL-GL-SMO-50-300-1200	300	400	1200	10	15	23	32	30	20	21	18
SIL-GL-SMO-50-300-1500	300	400	1500	12	17	24	34	32	21	23	22

ALNOR® ventilation system
is a legally protected trademark and technical patent. All rights reserved.

Silencer for circular smoke extraction systems

SIL-GL-SMO

Product code	Ød1 [mm]	D [mm]	L [mm]	attenuation [dB] for frequency [Hz]							Weight [kg]
				125	250	500	1000	2000	4000	8000	
SIL-GL-SMO-50-315-500	315	400	500	4	7	14	23	21	13	14	9
SIL-GL-SMO-50-315-600	315	400	600	5	8	16	25	19	14	15	10
SIL-GL-SMO-50-315-900	315	400	900	7	11	18	28	21	17	18	15
SIL-GL-SMO-50-315-1000	315	400	1000	8	12	19	28	22	18	19	16
SIL-GL-SMO-50-315-1200	315	400	1200	10	14	21	30	24	19	21	19
SIL-GL-SMO-50-315-1500	315	400	1500	12	16	23	32	26	21	22	23
SIL-GL-SMO-50-355-600	355	450	600	4	9	16	22	17	13	14	11
SIL-GL-SMO-50-355-900	355	450	900	7	11	19	25	19	16	17	16
SIL-GL-SMO-50-355-1000	355	450	1000	8	12	20	26	21	17	18	18
SIL-GL-SMO-50-355-1200	355	450	1200	10	15	22	27	22	18	20	21
SIL-GL-SMO-50-355-1500	355	450	1500	11	16	23	29	24	20	21	25
SIL-GL-SMO-50-400-600	400	500	600	4	8	15	20	15	12	13	13
SIL-GL-SMO-50-400-900	400	500	900	6	10	18	23	17	15	16	18
SIL-GL-SMO-50-400-1000	400	500	1000	8	12	19	24	18	16	17	20
SIL-GL-SMO-50-400-1200	400	500	1200	9	14	21	25	20	17	19	23
SIL-GL-SMO-50-400-1500	400	500	1500	11	15	22	27	22	19	20	28
SIL-GL-SMO-50-450-600	450	560	600	4	8	16	18	13	12	12	14
SIL-GL-SMO-50-450-900	450	560	900	6	11	18	21	16	15	15	20
SIL-GL-SMO-50-450-1000	450	560	1000	7	12	19	22	17	16	16	22
SIL-GL-SMO-50-450-1200	450	560	1200	9	14	21	23	18	17	17	26
SIL-GL-SMO-50-450-1500	450	560	1500	11	16	23	25	20	19	19	31
SIL-GL-SMO-50-500-600	500	600	600	3	7	14	17	11	11	12	16
SIL-GL-SMO-50-500-900	500	600	900	6	9	16	20	14	13	14	22
SIL-GL-SMO-50-500-1000	500	600	1000	7	11	17	21	15	14	15	24
SIL-GL-SMO-50-500-1200	500	600	1200	9	13	19	22	17	16	17	28
SIL-GL-SMO-50-500-1500	500	600	1500	10	14	20	24	18	17	19	34
SIL-GL-SMO-50-560-900	560	630	900	6	9	15	19	13	12	14	24
SIL-GL-SMO-50-560-1000	560	630	1000	7	10	16	20	14	13	15	27
SIL-GL-SMO-50-560-1200	560	630	1200	9	13	18	21	15	15	16	31
SIL-GL-SMO-50-630-900	630	710	900	5	8	14	18	11	12	13	27
SIL-GL-SMO-50-630-1000	630	710	1000	6	10	16	18	12	13	14	30
SIL-GL-SMO-50-630-1200	630	710	1200	8	12	17	20	14	14	15	35

ALNOR® ventilation system
is a legally protected trademark and technical patent. All rights reserved.

Silencer for circular smoke extraction systems

SIL-GL-SMO

For SIL-GL-SMO-100 - 100 mm of insulation

Product code	Ød$_1$ [mm]	D [mm]	L [mm]	attenuation [dB] for frequency [Hz]							Weight [kg]
				125	250	500	1000	2000	4000	8000	
SIL-GL-SMO-100-100-500	100	300	500	20	29	40	44	52	27	27	4
SIL-GL-SMO-100-100-600	100	300	600	21	30	44	48	53	29	28	5
SIL-GL-SMO-100-100-900	100	300	900	22	34	52	57	57	32	31	7
SIL-GL-SMO-100-100-1000	100	300	1000	22	34	55	60	58	33	33	8
SIL-GL-SMO-100-100-1200	100	300	1200	24	37	58	64	61	34	34	9
SIL-GL-SMO-100-125-300	125	315	300	17	24	38	42	51	26	28	3
SIL-GL-SMO-100-125-500	125	315	500	18	26	36	42	49	25	25	5
SIL-GL-SMO-100-125-600	125	315	600	18	26	36	42	49	25	25	6
SIL-GL-SMO-100-125-900	125	315	900	20	30	48	55	54	29	30	8
SIL-GL-SMO-100-125-1000	125	315	1000	20	31	51	58	55	31	31	9
SIL-GL-SMO-100-125-1200	125	315	1200	21	34	54	62	58	31	33	11
SIL-GL-SMO-100-150-300	150	355	300	15	21	33	37	44	23	25	4
SIL-GL-SMO-100-150-500	150	355	500	20	29	40	44	52	27	27	6
SIL-GL-SMO-100-150-600	150	355	600	17	25	36	41	43	23	24	6
SIL-GL-SMO-100-150-900	150	355	900	18	28	44	50	47	26	27	9
SIL-GL-SMO-100-150-1000	150	355	1000	18	28	47	53	48	28	28	10
SIL-GL-SMO-100-150-1200	150	355	1200	24	37	58	64	61	34	34	12
SIL-GL-SMO-100-160-300	160	355	300	16	21	29	34	41	20	23	4
SIL-GL-SMO-100-160-500	160	355	500	17	23	28	34	39	19	20	6
SIL-GL-SMO-100-160-600	160	355	600	17	24	32	38	40	21	21	7
SIL-GL-SMO-100-160-900	160	355	900	18	27	40	47	44	24	25	10
SIL-GL-SMO-100-160-1000	160	355	1000	19	28	43	50	45	25	26	11
SIL-GL-SMO-100-160-1200	160	355	1200	20	31	46	54	48	26	28	13
SIL-GL-SMO-100-200-300	200	400	300	13	18	27	29	36	18	21	5
SIL-GL-SMO-100-200-500	200	400	500	14	20	25	28	34	17	18	7
SIL-GL-SMO-100-200-600	200	400	600	14	21	29	33	35	19	19	8
SIL-GL-SMO-100-200-900	200	400	900	15	25	38	42	39	22	22	11
SIL-GL-SMO-100-200-1000	200	400	1000	16	25	41	45	40	23	24	12
SIL-GL-SMO-100-200-1200	200	400	1200	17	28	43	48	43	24	26	15
SIL-GL-SMO-100-250-500	250	450	500	11	17	22	26	29	15	16	8
SIL-GL-SMO-100-250-600	250	450	600	12	18	26	30	30	17	17	10
SIL-GL-SMO-100-250-900	250	450	900	13	22	34	39	34	20	20	13
SIL-GL-SMO-100-250-1000	250	450	1000	14	22	37	42	35	21	22	15
SIL-GL-SMO-100-250-1200	250	450	1200	15	25	40	46	38	22	23	17
SIL-GL-SMO-100-250-1500	250	450	1500	16	29	44	51	42	23	26	21
SIL-GL-SMO-100-315-500	315	500	500	10	16	17	22	25	13	14	10
SIL-GL-SMO-100-315-600	315	500	600	14	17	21	26	26	15	15	11
SIL-GL-SMO-100-315-900	315	500	900	12	20	39	35	30	18	19	16
SIL-GL-SMO-100-315-1000	315	500	1000	12	21	32	38	31	19	20	18
SIL-GL-SMO-100-315-1200	315	500	1200	14	24	35	42	34	22	23	21
SIL-GL-SMO-100-315-1500	315	500	1500	15	28	39	47	38	21	25	26

ALNOR® ventilation system
is a legally protected trademark and technical patent. All rights reserved.

Silencer for circular smoke extraction systems

SIL-GL-SMO

Product code	Ød1 [mm]	D [mm]	L [mm]	attenuation [dB] for frequency [Hz]							Weight [kg]
				125	250	500	1000	2000	4000	8000	
SIL-GL-SMO-100-355-600	355	560	600	10	15	20	23	23	13	14	13
SIL-GL-SMO-100-355-900	355	560	900	11	19	28	32	27	16	18	18
SIL-GL-SMO-100-355-1000	355	560	1000	11	19	31	35	28	18	19	20
SIL-GL-SMO-100-355-1200	355	560	1200	13	22	34	39	31	18	21	23
SIL-GL-SMO-100-355-1500	355	560	1500	14	26	38	44	35	19	24	28
SIL-GL-SMO-100-400-600	400	600	600	9	15	18	21	20	12	11	14
SIL-GL-SMO-100-400-900	400	600	900	11	18	26	30	24	14	14	20
SIL-GL-SMO-100-400-1000	400	600	1000	11	18	29	33	25	16	16	22
SIL-GL-SMO-100-400-1200	400	600	1200	12	22	32	37	28	16	17	26
SIL-GL-SMO-100-400-1500	400	600	1500	14	26	36	42	32	17	20	31
SIL-GL-SMO-100-450-600	450	630	600	9	14	16	18	17	10	10	16
SIL-GL-SMO-100-450-900	450	630	900	10	17	24	27	21	13	13	22
SIL-GL-SMO-100-450-1000	450	630	1000	10	18	27	30	22	15	15	24
SIL-GL-SMO-100-450-1200	450	630	1200	11	21	30	34	25	15	16	28
SIL-GL-SMO-100-450-1500	450	630	1500	13	25	34	39	29	16	19	35
SIL-GL-SMO-100-500-600	500	710	600	8	13	14	15	15	10	9	17
SIL-GL-SMO-100-500-900	500	710	900	10	16	22	24	19	13	13	24
SIL-GL-SMO-100-500-1000	500	710	1000	10	17	25	27	20	14	14	26
SIL-GL-SMO-100-500-1200	500	710	1200	11	20	28	31	23	15	16	31
SIL-GL-SMO-100-500-1500	500	710	1500	13	24	32	36	27	16	19	38
SIL-GL-SMO-100-560-900	560	800	900	9	15	21	23	18	12	12	27
SIL-GL-SMO-100-560-1000	560	800	1000	9	16	24	26	19	13	13	29
SIL-GL-SMO-100-560-1200	560	800	1200	10	19	27	30	22	14	15	34
SIL-GL-SMO-100-560-1500	560	800	1500	12	23	30	35	26	15	18	42
SIL-GL-SMO-100-630-900	630	800	900	8	15	20	22	17	11	11	30
SIL-GL-SMO-100-630-1000	630	800	1000	9	15	23	25	18	12	12	32
SIL-GL-SMO-100-630-1200	630	800	1200	10	18	26	29	21	13	14	38
SIL-GL-SMO-100-630-1500	630	800	1500	11	22	29	34	25	14	17	47
SIL-GL-SMO-100-710-1000	710	900	1000	8	14	20	23	16	11	10	36
SIL-GL-SMO-100-710-1200	710	900	1200	9	17	23	27	18	11	12	43
SIL-GL-SMO-100-710-1500	710	900	1500	11	21	26	30	22	12	15	52
SIL-GL-SMO-100-800-1000	800	1000	1000	8	14	20	22	15	10	10	50
SIL-GL-SMO-100-800-1200	800	1000	1200	9	17	22	25	18	11	12	58
SIL-GL-SMO-100-800-1500	800	1000	1500	10	21	26	30	22	12	15	72
SIL-GL-SMO-100-900-1000	900	1120	1000	7	13	19	20	13	9	10	55
SIL-GL-SMO-100-900-1200	900	1120	1200	8	16	22	24	16	10	11	65
SIL-GL-SMO-100-900-1500	900	1120	1500	10	20	26	29	20	11	14	80
SIL-GL-SMO-100-1000-1200	1000	1200	1200	7	16	21	23	15	9	11	72
SIL-GL-SMO-100-1000-1500	1000	1200	1500	9	20	25	27	19	11	14	88

ALNOR® ventilation system
is a legally protected trademark and technical patent. All rights reserved.

SIL-GL-SMO

Technical data

For SIL-GL-SMO-50 - 50 mm of insulation

Product code	pressure drop [Pa] for flow rate [m/s]				
	2	4	8	10	12
SIL-GL-SMO-50-100-300	0.36	1.42	5.68	8.88	12.79
SIL-GL-SMO-50-100-500	0.36	1.44	5.76	9.00	12.96
SIL-GL-SMO-50-100-600	0.37	1.47	5.88	9.18	13.22
SIL-GL-SMO-50-100-900	0.40	1.61	6.45	10.08	14.52
SIL-GL-SMO-50-100-1000	0.42	1.68	6.72	10.50	15.12
SIL-GL-SMO-50-100-1200	0.52	2.09	8.37	13.08	18.84
SIL-GL-SMO-50-125-300	0.29	1.15	4.61	7.20	10.37
SIL-GL-SMO-50-125-500	0.29	1.17	4.68	7.32	10.54
SIL-GL-SMO-50-125-600	0.30	1.20	4.80	7.50	10.80
SIL-GL-SMO-50-125-900	0.34	1.34	5.38	8.40	12.10
SIL-GL-SMO-50-125-1000	0.35	1.41	5.64	8.82	12.70
SIL-GL-SMO-50-125-1200	0.50	2.02	8.06	12.60	18.14
SIL-GL-SMO-50-150-300	0.34	1.34	5.38	8.40	12.10
SIL-GL-SMO-50-150-500	0.34	1.36	5.45	8.52	12.27
SIL-GL-SMO-50-150-600	0.35	1.39	5.57	8.70	12.53
SIL-GL-SMO-50-150-900	0.38	1.54	6.14	9.60	13.82
SIL-GL-SMO-50-150-1000	0.40	1.61	6.45	10.08	14.52
SIL-GL-SMO-50-150-1200	0.46	1.82	7.30	11.40	16.42
SIL-GL-SMO-50-160-300	0.24	0.96	3.84	6.00	8.64
SIL-GL-SMO-50-160-500	0.25	0.99	3.96	6.18	8.90
SIL-GL-SMO-50-160-600	0.25	1.02	4.07	6.36	9.16
SIL-GL-SMO-50-160-900	0.29	1.15	4.61	7.20	10.37
SIL-GL-SMO-50-160-1000	0.31	1.23	4.92	7.68	11.06
SIL-GL-SMO-50-160-1200	0.41	1.63	6.53	10.20	14.69
SIL-GL-SMO-50-200-300	0.17	0.67	2.69	4.20	6.05
SIL-GL-SMO-50-200-500	0.17	0.69	2.76	4.32	6.22
SIL-GL-SMO-50-200-600	0.18	0.72	2.88	4.50	6.48
SIL-GL-SMO-50-200-900	0.22	0.86	3.46	5.40	7.78
SIL-GL-SMO-50-200-1000	0.24	0.94	3.76	5.88	8.47
SIL-GL-SMO-50-200-1200	0.34	1.34	5.38	8.40	12.10
SIL-GL-SMO-50-250-500	0.18	0.74	2.96	4.62	6.65
SIL-GL-SMO-50-250-600	0.19	0.77	3.07	4.80	6.91
SIL-GL-SMO-50-250-900	0.23	0.91	3.65	5.70	8.21
SIL-GL-SMO-50-250-1000	0.25	0.99	3.96	6.18	8.90
SIL-GL-SMO-50-250-1200	0.35	1.39	5.57	8.70	12.53

Product code	pressure drop [Pa] for flow rate [m/s]				
	2	4	8	10	12
SIL-GL-SMO-50-250-1500	0.40	1.58	6.34	9.90	14.26
SIL-GL-SMO-50-300-500	0.15	0.59	2.34	3.66	5.27
SIL-GL-SMO-50-300-600	0.16	0.62	2.50	3.90	5.62
SIL-GL-SMO-50-300-900	1.90	7.58	30.34	47.40	68.26
SIL-GL-SMO-50-300-1000	0.21	0.84	3.34	5.22	7.52
SIL-GL-SMO-50-300-1200	0.31	1.24	4.95	7.74	11.15
SIL-GL-SMO-50-300-1500	0.37	1.50	5.99	9.36	13.48
SIL-GL-SMO-50-315-500	0.12	0.50	2.00	3.12	4.49
SIL-GL-SMO-50-315-600	0.13	0.53	2.11	3.30	4.75
SIL-GL-SMO-50-315-900	0.17	0.67	2.69	4.20	6.05
SIL-GL-SMO-50-315-1000	0.19	0.75	3.00	4.68	6.74
SIL-GL-SMO-50-315-1200	0.29	1.15	4.61	7.20	10.37
SIL-GL-SMO-50-315-1500	0.35	1.39	5.57	8.70	12.53
SIL-GL-SMO-50-355-600	0.11	0.43	1.73	2.70	3.89
SIL-GL-SMO-50-355-900	0.14	0.57	2.27	3.54	5.10
SIL-GL-SMO-50-355-1000	0.16	0.64	2.57	4.02	5.79
SIL-GL-SMO-50-355-1200	0.26	1.05	4.19	6.54	9.42
SIL-GL-SMO-50-355-1500	0.33	1.33	5.34	8.34	12.01
SIL-GL-SMO-50-400-600	0.09	0.37	1.50	2.34	3.37
SIL-GL-SMO-50-400-900	0.13	0.52	2.07	3.24	4.67
SIL-GL-SMO-50-400-1000	0.15	0.59	2.34	3.66	5.27
SIL-GL-SMO-50-400-1200	0.25	1.00	3.99	6.24	8.99
SIL-GL-SMO-50-400-1500	0.33	1.31	5.22	8.16	11.75
SIL-GL-SMO-50-450-600	0.08	0.34	1.34	2.10	3.02
SIL-GL-SMO-50-450-900	1.20	4.80	19.20	30.00	43.20
SIL-GL-SMO-50-450-1000	0.14	0.56	2.23	3.48	5.01
SIL-GL-SMO-50-450-1200	0.24	0.96	3.84	6.00	8.64
SIL-GL-SMO-50-450-1500	0.31	1.25	4.99	7.80	11.23
SIL-GL-SMO-50-500-600	0.07	0.29	1.15	1.80	2.59
SIL-GL-SMO-50-500-900	0.11	0.43	1.73	2.70	3.89
SIL-GL-SMO-50-500-1000	0.12	0.50	2.00	3.12	4.49
SIL-GL-SMO-50-500-1200	0.23	0.91	3.65	5.70	8.21
SIL-GL-SMO-50-500-1500	0.30	1.21	4.84	7.56	10.89
SIL-GL-SMO-50-560-900	0.10	0.39	1.57	2.46	3.54
SIL-GL-SMO-50-560-1000	0.12	0.47	1.88	2.94	4.23
SIL-GL-SMO-50-560-1200	0.22	0.87	3.49	5.46	7.86
SIL-GL-SMO-50-630-900	0.09	0.36	1.42	2.22	3.20
SIL-GL-SMO-50-630-1000	0.11	0.43	1.73	2.70	3.89
SIL-GL-SMO-50-630-1200	0.21	0.84	3.34	5.22	7.52

ALNOR® ventilation system
is a legally protected trademark and technical patent. All rights reserved.

Silencer for circular smoke extraction systems

SIL-GL-SMO

For SIL-GL-SMO-100 - 100 mm of insulation

Product code	spressure drop [Pa] for flow rate [m/s]				
	2	4	8	10	12
SIL-GL-SMO-100-100-500	0.26	1.04	4.15	6.48	9.33
SIL-GL-SMO-100-100-600	0.28	1.13	4.53	7.08	10.20
SIL-GL-SMO-100-100-900	0.34	1.34	5.38	8.40	12.10
SIL-GL-SMO-100-100-1000	0.35	1.40	5.61	8.76	12.61
SIL-GL-SMO-100-100-1200	0.37	1.50	5.99	9.36	13.48
SIL-GL-SMO-100-125-300	0.19	0.77	3.07	4.80	6.91
SIL-GL-SMO-100-125-500	0.25	0.99	3.96	6.18	8.90
SIL-GL-SMO-100-125-600	0.27	1.08	4.34	6.78	9.76
SIL-GL-SMO-100-125-900	0.33	1.31	5.22	8.16	11.75
SIL-GL-SMO-100-125-1000	0.34	1.36	5.45	8.52	12.27
SIL-GL-SMO-100-125-1200	0.36	1.46	5.84	9.12	13.13
SIL-GL-SMO-100-150-300	0.18	0.72	2.88	4.50	6.48
SIL-GL-SMO-100-150-500	0.24	0.94	3.76	5.88	8.47
SIL-GL-SMO-100-150-600	0.26	1.04	4.15	6.48	9.33
SIL-GL-SMO-100-150-900	0.31	1.25	4.99	7.80	11.23
SIL-GL-SMO-100-150-1000	0.33	1.31	5.22	8.16	11.75
SIL-GL-SMO-100-150-1200	0.35	1.40	5.61	8.76	12.61
SIL-GL-SMO-100-160-300	0.17	0.67	2.69	4.20	6.05
SIL-GL-SMO-100-160-500	0.23	0.91	3.65	5.70	8.21
SIL-GL-SMO-100-160-600	0.25	1.01	4.03	6.30	9.07
SIL-GL-SMO-100-160-900	0.31	1.23	4.92	7.68	11.06
SIL-GL-SMO-100-160-1000	0.32	1.29	5.15	8.04	11.58
SIL-GL-SMO-100-160-1200	0.35	1.38	5.53	8.64	12.44
SIL-GL-SMO-100-200-300	0.16	0.64	2.57	4.02	5.79
SIL-GL-SMO-100-200-500	0.20	0.82	3.26	5.10	7.34
SIL-GL-SMO-100-200-600	0.23	0.91	3.65	5.70	8.21
SIL-GL-SMO-100-200-900	0.28	1.12	4.49	7.02	10.11
SIL-GL-SMO-100-200-1000	0.30	1.18	4.72	7.38	10.63
SIL-GL-SMO-100-200-1200	0.32	1.28	5.11	7.98	11.49
SIL-GL-SMO-100-250-500	0.17	0.67	2.69	4.20	6.05
SIL-GL-SMO-100-250-600	0.19	0.77	3.07	4.80	6.91
SIL-GL-SMO-100-250-900	0.24	0.98	3.92	6.12	8.81
SIL-GL-SMO-100-250-1000	0.26	1.04	4.15	6.48	9.33
SIL-GL-SMO-100-250-1200	0.28	1.13	4.53	7.08	10.20
SIL-GL-SMO-100-250-1500	0.31	1.25	4.99	7.80	11.23
SIL-GL-SMO-100-315-500	0.00	0.00	0.00	0.00	0.00
SIL-GL-SMO-100-315-600	0.14	0.57	2.27	3.54	5.10
SIL-GL-SMO-100-315-900	0.19	0.78	3.11	4.86	7.00
SIL-GL-SMO-100-315-1000	0.21	0.84	3.34	5.22	7.52
SIL-GL-SMO-100-315-1200	0.23	0.93	3.72	5.82	8.38
SIL-GL-SMO-100-315-1500	0.26	1.05	4.19	6.54	9.42

Product code	pressure drop [Pa] for flow rate [m/s]				
	2	4	8	10	12
SIL-GL-SMO-100-355-600	0.11	0.44	1.77	2.76	3.97
SIL-GL-SMO-100-355-900	0.17	0.66	2.65	4.14	5.96
SIL-GL-SMO-100-355-1000	0.18	0.71	2.84	4.44	6.39
SIL-GL-SMO-100-355-1200	0.20	0.81	3.23	5.04	7.26
SIL-GL-SMO-100-355-1500	0.23	0.93	3.72	5.82	8.38
SIL-GL-SMO-100-400-600	0.08	0.32	1.27	1.98	2.85
SIL-GL-SMO-100-400-900	0.13	0.53	2.11	3.30	4.75
SIL-GL-SMO-100-400-1000	0.15	0.59	2.34	3.66	5.27
SIL-GL-SMO-100-400-1200	0.17	0.68	2.73	4.26	6.13
SIL-GL-SMO-100-400-1500	0.20	0.80	3.19	4.98	7.17
SIL-GL-SMO-100-450-600	0.05	0.19	0.77	1.20	1.73
SIL-GL-SMO-100-450-900	0.10	0.40	1.61	2.52	3.63
SIL-GL-SMO-100-450-1000	0.12	0.46	1.84	2.88	4.15
SIL-GL-SMO-100-450-1200	0.14	0.56	2.23	3.48	5.01
SIL-GL-SMO-100-450-1500	0.17	0.67	2.69	4.20	6.05
SIL-GL-SMO-100-500-600	0.02	0.08	0.31	0.48	0.69
SIL-GL-SMO-100-500-900	0.07	0.29	1.15	1.80	2.59
SIL-GL-SMO-100-500-1000	0.09	0.35	1.38	2.16	3.11
SIL-GL-SMO-100-500-1200	0.11	0.44	1.77	2.76	3.97
SIL-GL-SMO-100-500-1500	0.14	0.56	2.23	3.48	5.01
SIL-GL-SMO-100-560-900	0.05	0.19	0.77	1.20	1.73
SIL-GL-SMO-100-560-1000	0.06	0.24	0.98	1.53	2.20
SIL-GL-SMO-100-560-1200	0.09	0.34	1.36	2.13	3.07
SIL-GL-SMO-100-560-1500	0.12	0.46	1.84	2.88	4.15
SIL-GL-SMO-100-630-900	0.02	0.10	0.38	0.60	0.86
SIL-GL-SMO-100-630-1000	0.04	0.14	0.58	0.90	1.30
SIL-GL-SMO-100-630-1200	0.06	0.24	0.96	1.50	2.16
SIL-GL-SMO-100-630-1500	0.09	0.36	1.46	2.28	3.28
SIL-GL-SMO-100-710-1000	0.02	0.08	0.31	0.48	0.69
SIL-GL-SMO-100-710-1200	0.04	0.17	0.69	1.08	1.56
SIL-GL-SMO-100-710-1500	0.07	0.30	1.19	1.86	2.68
SIL-GL-SMO-100-800-1000	0.01	0.04	0.15	0.24	0.35
SIL-GL-SMO-100-800-1200	0.03	0.13	0.54	0.84	1.21
SIL-GL-SMO-100-800-1500	0.06	0.25	1.00	1.56	2.25
SIL-GL-SMO-100-900-1000	0.00	0.01	0.04	0.06	0.09
SIL-GL-SMO-100-900-1200	0.03	0.11	0.42	0.66	0.95
SIL-GL-SMO-100-900-1500	0.06	0.23	0.92	1.44	2.07
SIL-GL-SMO-100-1000-1200	0.03	0.1	0.33	0.48	0.73
SIL-GL-SMO-100-1000-1500	0.05	0.21	0.85	1.35	1.92

ALNOR® ventilation system
is a legally protected trademark and technical patent. All rights reserved.

Ducts and fittings made of EPP

ALNOR reserves the right to modify technical specifications in line with the policy of continuous product improvement.

ALNOR® systemy wentylacji
jest prawnie chronionym znakiem i technicznym patentem. Prawo do zmian zastrzeżone.

About the system

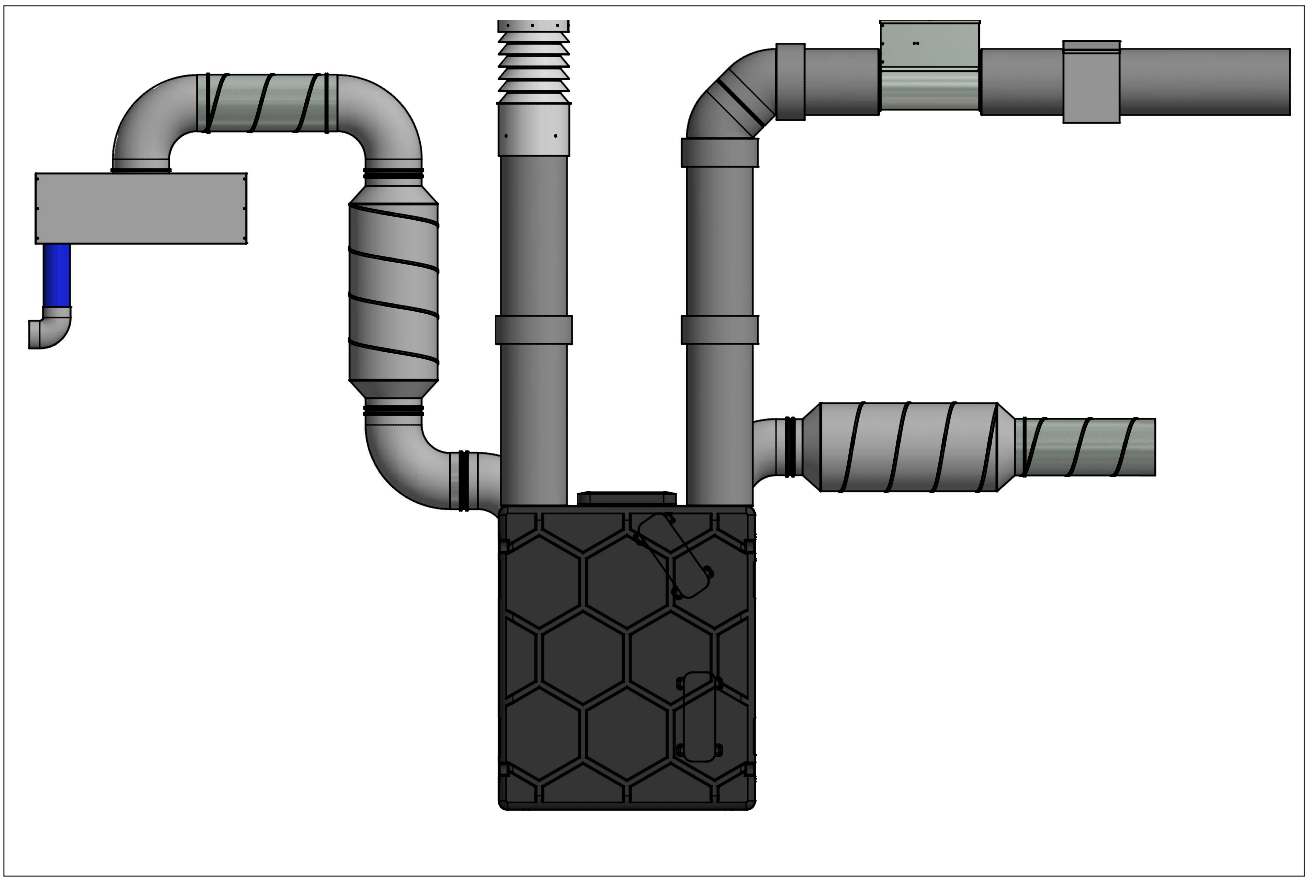

About the system

The EPP duct system is made of expanded polypropylene. The system has a number of design and installation advantages: low weight, quick installation (no additional connectors or screws required), no additional insulation is required since the material itself is already an insulator, easy to cut using hand tools, no thermal bridges. Thermal conductivity: λ=0.039 [W / m * k]

Dimensions

Ducts and fittings are available in the following diameters (inner): Ø100, Ø125, Ø160 and Ø180. The ducts are sold in two lengths: 500 and 1000 mm. The wall thickness is 15mm (standard version, graphite color) or 43mm (expanded version, black color). Each duct or fitting is supplied with 1 female coupling.
The inner diameter of the EPP duct system fits the size of the SPIRAL®System components with male ends.

Installation

The EPP ducts and fittings are connected using a female coupling which is supplied to each element. Each coupling has double <fold>, similar to double seals in the SPIRAL®System, thanks to which the system achieves airtightness class C (according to EN 12237). EPP is easy to process, each 90˚bend can easily be cut in half, giving two 45˚ bends.
Moreover, the EPP system components can be combined and adapted with the male elements of the SPIRAL®System (it's recommended to choose fittings with seals). The ducts fit directly into the connectors of the PremAIR heat recovery units and into the FLX-PLO-R or FLX-PRO-R distribution boxes (manifolds). The EPP duct can also be fitted directly with air intake and exhaust vents, e.g. USLA and USAV.
Due to the lightweight design of the elements, the suspension system is practically unnecessary. If additional clamps are needed - standard suspension clamps with the following diameters can be used.

Code	*Outer diameter in [mm]*	*Recommended Suspension clamp*
EPP-SRGL-125	155	CLRU-150
EPP-SRGL-150	180	CLRU-180
EPP-SRGL-160	190	CLRU-192
EPP-SRGL-180	210	CLRU-200

ALNOR® ventilation system
is a legally protected trademark and technical patent. All rights reserved.

Ventilation ducts made of EPP

EPP-SRGL



Description

Round ventilation duct made of expanded polypropylene (EPP). The most important features of the product are: rigid construction, low weight, easy assembly (female coupling on each element) and good thermal insulation. EPP ducts, used, for example, as sections of the supply and exhaust ventilation systems with heat recovery, do not require additional insulation. The system eliminates the formation of thermal bridges.
EPP ducts are manufactured in 0.5 m and 1 m sections and diameters 125, 150, 160 and 180 mm. The standard wall thickness is 15mm (gray colour). Available on request 43mm thick (black colour). The duct is supplied with one female coupling in the set.

Thermal conductivity: 0.039 W / m * K
Airtightness class: C
Surface roughness: 0.077 mm

Available materials:
EPP-SRGL-...- EPP (expanded polypropylene)

Product code example:
Product code: **EPP-SRGL - 125 - 0100**

type
diameter
lenght

Dimensions

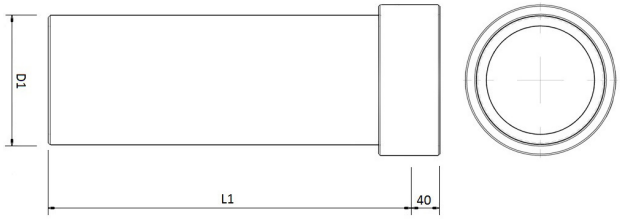

Product code	Diameter [mm]	Wall thickness [mm]	Length [mm]
EPP-SRGL-125-0050	125	15	500
EPP-SRGL-150-0050	150	15	500
EPP-SRGL-160-0050	160	15	500
EPP-SRGL-180-0050	180	15	500
EPP-SRGL-125-0100	125	15	1000
EPP-SRGL-150-0100	150	15	1000
EPP-SRGL-160-0100	160	15	1000
EPP-SRGL-180-0100	180	15	1000

ALNOR® ventilation system
is a legally protected trademark and technical patent. All rights reserved.

Ventilation ducts made of EPP

EPP-SRGL

Technical data

Pressure loss chart

Measurement: **inner diameter: 125mm, length: 0.5m**, temp: 25˚C, P_{atm}: 1004 mBar, ρ (density): 1.173 kg/m³

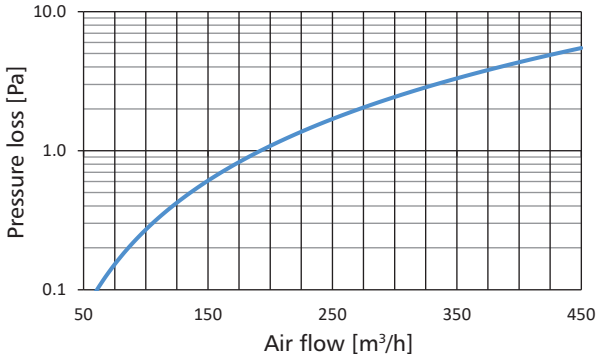

Measurement: **inner diameter: 125mm, length: 1m**, temp: 25˚C, P_{atm}: 1004 mBar, ρ (density): 1.173 kg/m³

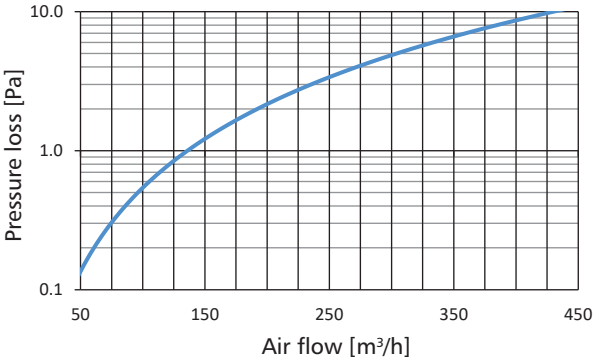

Measurement: **inner diameter: 150mm, length: 0.5m**, temp: 28.5˚C, P_{atm}: 1004 mBar, ρ (density): 1.159 kg/m³

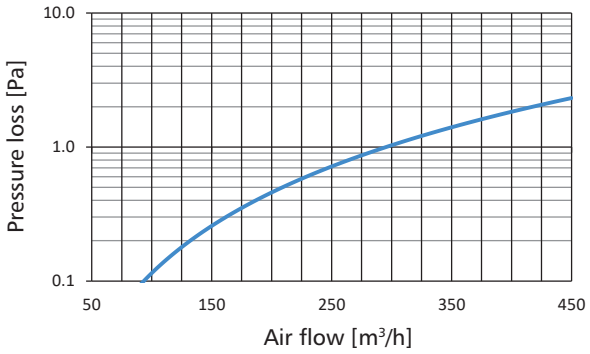

Measurement: **inner diameter: 150mm, length: 1m**, temp: 28.5˚C, P_{atm}: 1004 mBar, ρ (density): 1.159 kg/m³

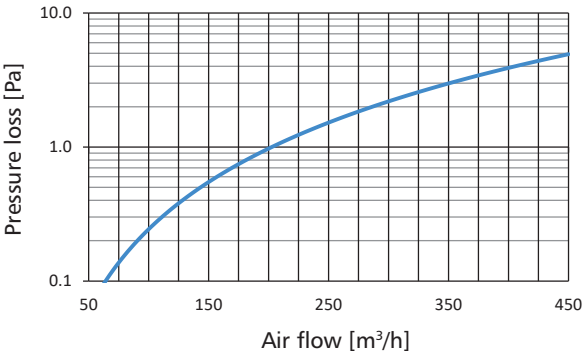

Measurement: **inner diameter: 160mm, length: 0,5m**, temp: 30.6˚C, P_{atm}: 1004 mBar, ρ (density): 1.151 kg/m³

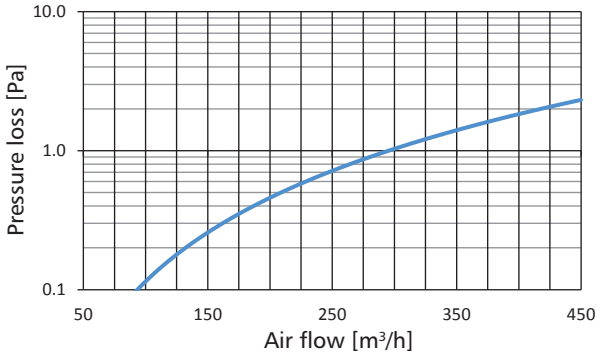

Measurement: **inner diameter: 160mm, length: 1m**, temp: 30.6˚C, P_{atm}: 1004 mBar, ρ (density): 1.151 kg/m³

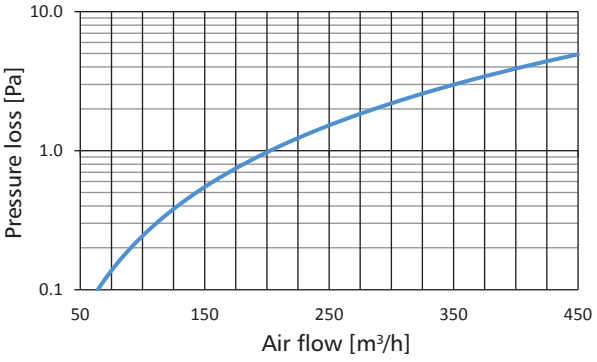

ALNOR® ventilation system
is a legally protected trademark and technical patent. All rights reserved.

EPP-SRGL

Measurement: **inner diameter: 180mm, length: 0,5m**, temp: 33.8˚C, P_{atm}: 1004 mBar, ρ (density): 1.139 kg/m³

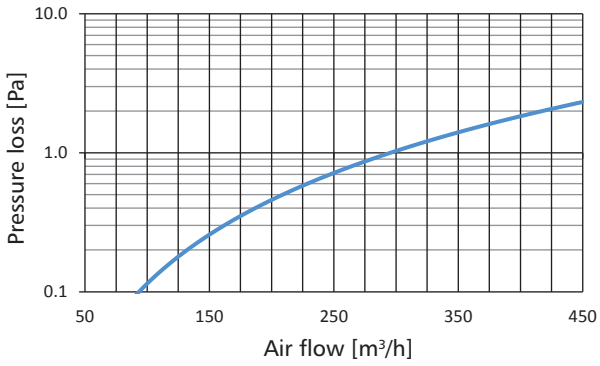

Measurement: **inner diameter: 180mm, length: 1m**, temp: 33.8˚C, P_{atm}: 1004 mBar, ρ (density): 1.139 kg/m³

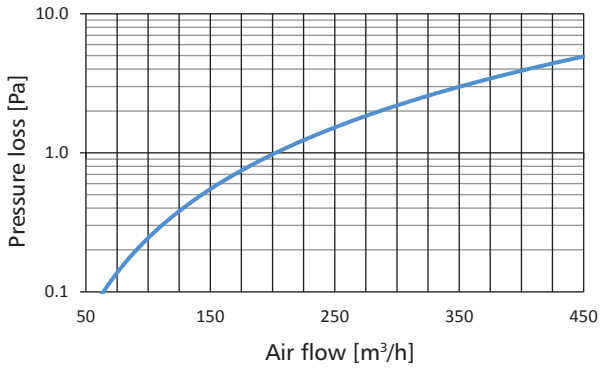

ALNOR® ventilation system
is a legally protected trademark and technical patent. All rights reserved.

90° Ventilation bend made of EPP

EPP-BPF-90



Description

90° ventilation bend made of expanded polypropylene (EPP). Bends are produced in diameters 125, 150, 160 and 180mm. The standard wall thickness is 15mm (gray). Available on request 43mm thick (black color). Each bend is delivered with one female coupling in the set, the connection method eliminates thermal bridges. The 90° bend can be cut in half along the extrusion, forming two 45° bends (an additional EPP-MSF may be needed).

Thermal conductivity: 0.039 W / m * K
Airtightness class: C
Surface roughness: 0.077 mm

Available materials:
EPP-BPF-….- EPP (expanded polypropylene)

Example of marking:
Product code: **EPP-BPF - aaa - bbb**

type
diameter Ød$_1$
angle

Dimensions

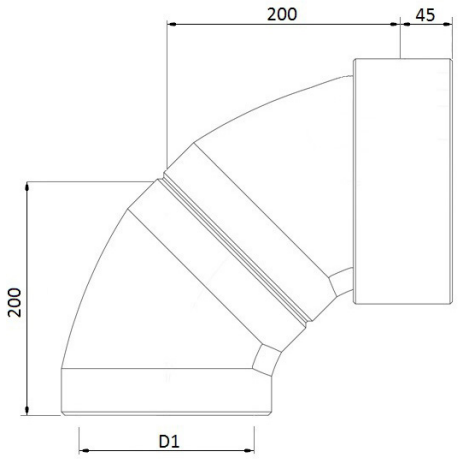

Product code	*Diameter [mm]*	*Wall thickness [mm]*
EPP-BPF-125-90	125	15
EPP-BPF-150-90	150	15
EPP-BPF-160-90	160	15
EPP-BPF-180-90	180	15

ALNOR® ventilation system
is a legally protected trademark and technical patent. All rights reserved.

90° Ventilation bend made of EPP

EPP-BPF-90

Technical data

Pressure loss chart

Measurement: **inner diameter: 125mm, angle: 90°**, temp: 25°C, P_{atm}: 1004 mBar, ρ (density): 1.173 kg/m³

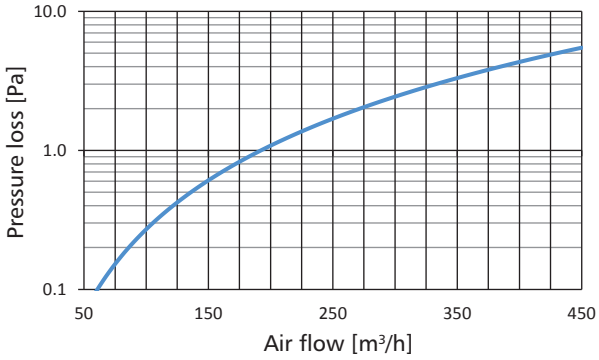

Measurement: **inner diameter: 150mm, angle: 90°**, temp: 28.9°C, P_{atm}: 1004 mBar, ρ (density): 1.158 kg/m³

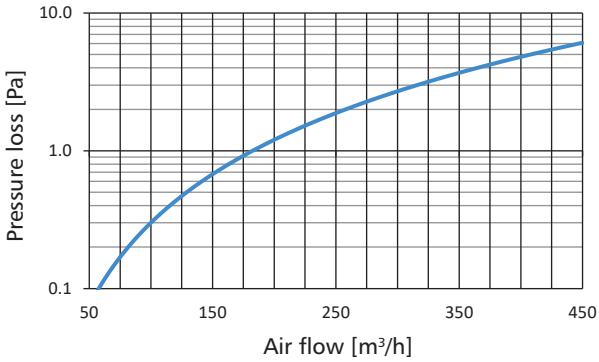

Measurement: **inner diameter: 160mm, angle: 90°**, temp: 32°C, P_{atm}: 1004 mBar, ρ (density): 1.146 kg/m³

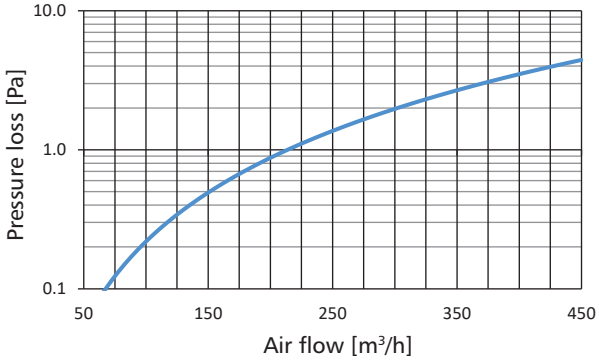

Measurement: **inner diameter: 180mm, angle: 90°**, temp: 27.4°C, P_{atm}: 1015 mBar, ρ (density): 1.176 kg/m³

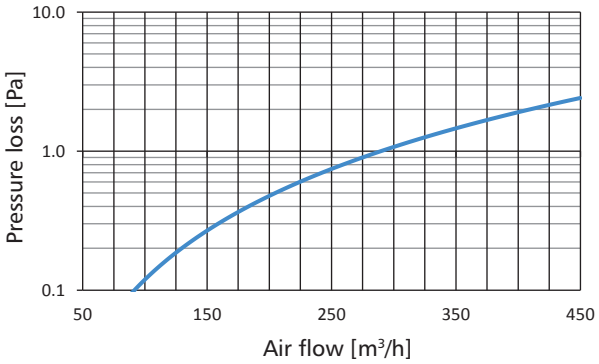

ALNOR® ventilation system
is a legally protected trademark and technical patent. All rights reserved.

45° Ventilation bend made of EPP

EPP-BPF-45



Description

Ventilation bends 45° made from expanded polypropylene (EPP). Bends are produced in diameters 125, 150, 160 and 180mm. The standard wall thickness is 15mm (gray). Available on request 43mm thick (black color). Each bend is delivered with one female coupling in the set, the connection method eliminates thermal bridges.

Thermal conductivity: 0.039 W / m * K
Airtightness class: C
Surface roughness: 0.077 mm

Available materials:
EPP-BPF-….- EPP (expanded polypropylene)

Example of marking:
Product code: **EPP-BPF - aaa - bbb**

type
diameter Ød$_1$
angle

Dimensions

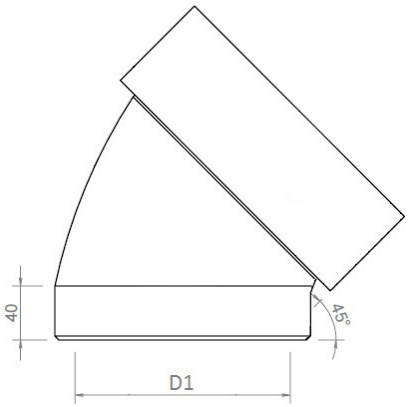

Product code	Diameter [mm]	Wall thickness [mm]
EPP-BPF-125-45	125	15
EPP-BPF-150-45	150	15
EPP-BPF-160-45	160	15
EPP-BPF-180-45	180	15

ALNOR® ventilation system
is a legally protected trademark and technical patent. All rights reserved.

45° Ventilation bend made of EPP

EPP-BPF-45

Technical data

Pressure loss chart

Measurement: **inner diameter: 125mm, angle: 45°**,
temp: 24.8°C, P_{atm}: 1004 mBar, ρ (density): 1.174 kg/m³

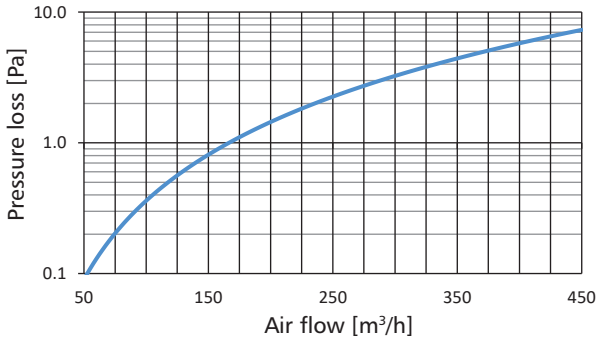

Measurement: **inner diameter: 150mm, angle: 45°**,
temp: 28.5°C, P_{atm}: 1004 mBar, ρ (density): 1.159 kg/m³

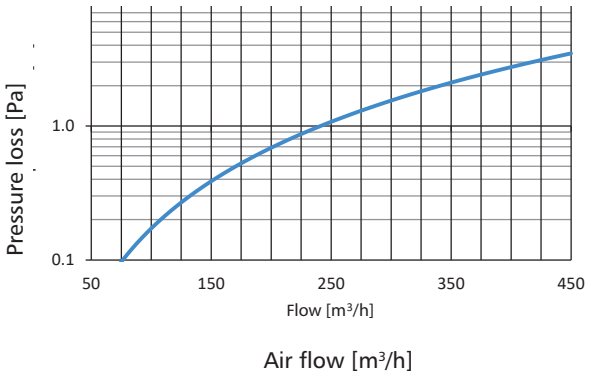

Measurement: **inner diameter: 160mm, angle: 45°**,
temp: 28,2°C, P_{atm}: 1015 mBar, ρ (density): 1.173 kg/m³

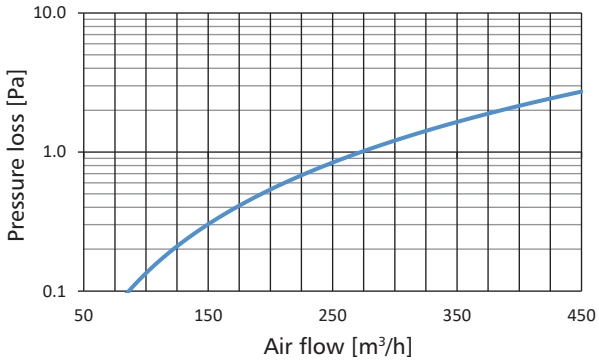

Measurement: **inner diameter: 180mm, angle: 45°**,
temp: 27,8°C, P_{atm}: 1015 mBar, ρ (density): 1.175 kg/m³

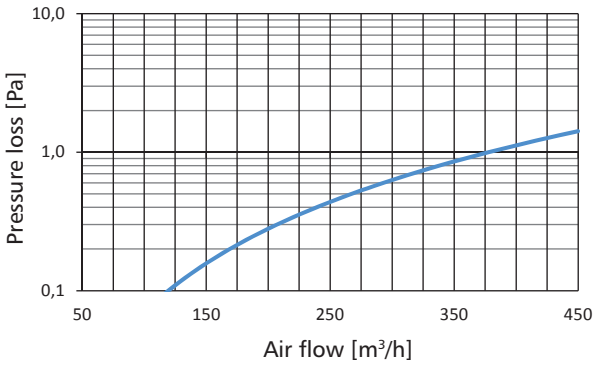

ALNOR® ventilation system
is a legally protected trademark and technical patent. All rights reserved.

Female coupling made of EPP

EPP-MSF



Description

Female coupling made of expended polypropylene (EPP) for connecting ducts and fittings. The coupling is used to connect all elements of the EPP duct system: duct+duct, duct+fitting, fitting+fitting.
The female couplings are produced in the following diameters: 125, 150, 160 and 180mm.

Thermal conductivity: 0.039 W / m * K
Airtightness class: C
Surface roughness: 0.077 mm

Available materials:
EPP-MSF-….- EPP (expanded polypropylene)

Example of marking:
Product code: **EPP-MSF - aaa**

type
diameter Ød$_1$

Dimensions

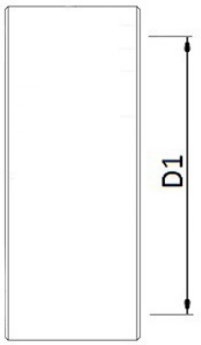

Product code	*Diameter [mm]*	*Wall thickness [mm]*
EPP-MSF-125	125	15
EPP-MSF-150	150	15
EPP-MSF-160	160	15
EPP-MSF-180	180	15

Assembly method

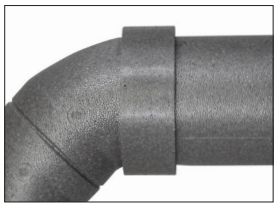

ALNOR® ventilation system
is a legally protected trademark and technical patent. All rights reserved.

One-piece suspension ring
CLRU



Description

Instalacja wentylacyji składająca się z kanałów i kształtek z EPP jest bardzo lekka i wytrzymała. Jeśli zajdzie potrzeba podwieszenie instalcji lub jej przymocowania można użyć do tego standardowych obejm jednoczęściowych CLRU. Górna część – uszy skręcane są ze sobą za pomocą śruby stalowej i nakrętki.

Available materials:

CLRU-...-... - galvanized steel sheet
CLRU-K-...-... - 1.4301/304 stainless steel sheet
CLRU-K-...-...-316L - 1.4404/316L stainless steel sheet, molybdenum-enriched

Example of marking:

Product code: **CLRU - 160 - 120**

type
Ød$_1$
thickness t

Dimensions

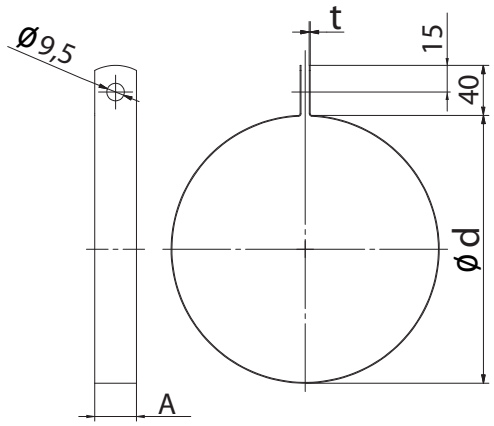

Ød [mm]	A [mm]	t [mm]	A [mm]	t [mm]
125	25	2,0	30	1,2
150	25	2,0	30	1,2
160	25	2,0	30	1,2
180	25	2,0	30	1,2

Assembly method

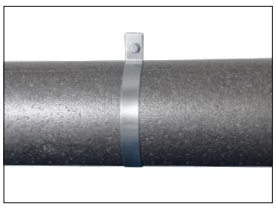

ALNOR® ventilation system
is a legally protected trademark and technical patent. All rights reserved.